SDC-91-112

SDC
SOLENOIDAL DETECTOR NOTES

FINITE ELEMENT MODELLING OF MUON DETECTOR MODULE UNIVERSITY OF WASHINGTON/SSC DESIGN

September 24, 1991

C.H. Daly

Finite Element Modelling of Muon Detector Module Univ. of Wash. /SSC Design

C. H. Daly

Department of Mechanical Engineering, FU-10
University of Washington

September 24, 1991

The major questions to be answered by FEA of this module design are:

1. What magnitude of overall module deflection is seen for each of the modules in the three layers of the detector (BW1, BW2 and BW3)? How is this affected by support locations and the number of layers of tubes in the modules?

2. What values of shear stress are encountered in the adhesive bonding between the tubes and the plates.

The second of these questions requires a detailed model of the tube and plate structure. It is not realistic to use such a detailed model of the whole module to find overall deflections. As each module is a very large flat plate in overall shape, it is reasonable to model a module as a flat shell with just the rim of the module modeled separately. One first has to come up with equivalent properties for this shell so that it models the real structure of tubes and plates. Using data from this shell model, a small region of tubes and plates can then be modeled in detail.

In most of the analysis below, discussion is limited to a BW1 module with 4 layers of tubes in the θ direction. This is the thinnest likely module and is thus not only the simplest to model but is also the worst case for rigidity. The methods are easily extended to any other tube configuration as these are finally settled on.

A. determination of equivalent shell properties

The prototype to be built by this design team will consist of a 9 m. long section of tube and plate structure with a cross-section as shown in Figure 1. (the actual prototype will have 6 tube layers, 4 θ and 2 ϕ). The tubes are all 76.2 mm. (3.00 in.) diameter with a 1.59 mm. (0.0625 in.) wall thickness. The intermediate plates are all 1.59 mm (0.0625 in.) thick. The top and bottom plates are 6.35 mm. (0.25 in.) thick. The overall dimensions of the cross section are 630 mm. (24.8 in.) wide and 329 mm. (12.937 in.) high. The moment of Inertia I_x and area A_x of the section are then found. Together with the Young's Modulus E, the quantities EI_x and EA_x determine the properties relevant for bending and axial loading respectively. If the whole beam is simply supported at its ends, the deflection at the mid point is given by:

$$\delta_{max} = 5wL^4 / 384EI_x = 2.487 \text{ mm. } (0.0983")$$

w is the load/unit length and in this case is just the weight/unit length

As the tube/plate structure is not isotropic, we must also get similar properties in the Y–direction. In this case, the tubes would be perpendicular to the beam axis and would contribute little to the bending stiffness. Ignoring the tubes, we can then get values for I_y and A_y.

In the finite element model, the shell elements are constant thickness plates. We must choose suitable values for E and thickness t to obtain the same values for EI and EA for the model and the actual structure. It is not possible to do this for both directions at once, but as the bending stiffness will be much more important than membrane effects for this model, it is sufficient to match the values for EI_x and EI_y. One also must modify the density of the material to get the correct load/unit area for the model.

A simple test of this concept is shown in Figure 2. The 4–layer prototype is modeled as a simply supported beam using the equivalent shell elements. Analysis is done using the STIF93 8–noded quadrilateral shell element in Ansys. The maximum deflection is essentially identical to that given above.

FEA Shell model of a module.

In the Washington/SSC design, at any given layer (BW1,2,3), each face of the octagonal detector surface is made up of 3 modules. The maximum length of any given module is assumed to be one third of the axial length of the BW3 module, i.e. 9687 mm. The width is, of course different for each module. The dimensions used in the analysis described below are taken from the 8/3/91 configuration of the detector. The numbers of tube layers in each module have not been determined at the time of writing. The results given are thus tentative and can be revised easily when the final configuration is available.The configuration used here is:

BW1 module – 4 layers in θ direction
BW2 module – 4 layers in θ direction, 4–layers in ϕ direction (8 layers total)
BW3 module – 4 –layers in θ direction, 2 stereo layers (6 layers total)

All modules are supported in the radial direction at three points along the long edges (i.e. the ϕ direction). In the $\theta\phi$ plane, purely kinematic constraints are used.

Figure 3 shows a model of a 4–layer BW1 module. Because of symmetry, it is only necessary to model one quadrant of the module. The tube/plate structure is modeled by equivalent shell elements as described above. The side and end plates of the module are modeled by 19mm. (0.75 in.) thick shell elements. This module is in the top position in the barrel and is thus the worst loading case. Note that the maximum deflection of 0.37 mm. is quite acceptable. If the module is supported only at the 4 corners, the deflection is still less than 1 mm.

Figures 4–7 show results for BW1 modules on all other faces of the octagon.

Figures 8 and 9 show results for a 8–layer BW2 module and a 6–layer BW3 module respectively. The deflection of the BW2 module is acceptable but that for the the BW3 module is greater than 1.0 mm.

Discussion:

The BW1 and BW2 module configurations shown above are adequately stiff by themselves. The most important result is that a 4–layer BW1 module appears to be practical. BW1 is is adequately stiff when it mounted on either 4 or 6 supports. However, as can be seen from Figure 10, a pure kinematic, 3–point support is not practical for this module.

The 6–layer BW3 module with 6–supports shows excessive deflection. However, when BW2, BW3 and the truss spacer between are considered as a single unit, the whole structure will be very stiff indeed. The major issues to be considered will be the connections between the truss and the modules and the deflections of the whole structure due to differential thermal expansion. A model of of a supermodule composed of the BW2 and BW3 modules together with a truss composed of simple tension/compression members is shown is Figure 11.

Further work:

Truss structures such as that shown in Figure 11 will be analysed to produce a supermodule which is sufficiently rigid to be mounted on the magnet using pure kinematic supports. The effects of thermal gradients on this supermodule will be studied.

While stresses in the metal parts of the tube/plate structure are quite low (3–4 MPa from the above models), the stress on the adhesive joints also needs to be considered. For the prototype 4–layer beam, an approximate analysis gives shear stress values at the neutral axis on the order of 200–300 psi. The represents a factor of safety of about 4. In order to obtain better values for full size modules with more complex structures it will be necessary to determine the most highly loaded regions of the module from the analysis shown above and to use these conditions to load a detailed model of a small part of the whole module. Figure 12 shows such a model for part of a 4–layer module.

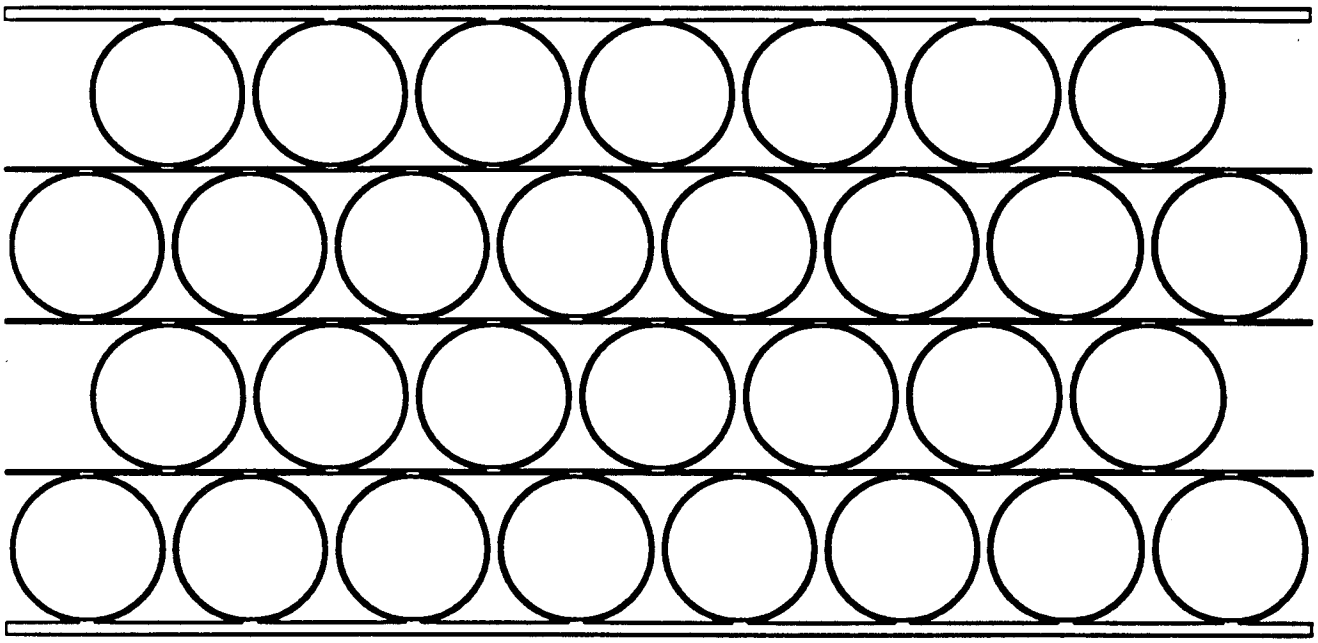

Figure 1. Cross–section of 4–layer prototype. All tubes are 1.59 mm. (0.0625 in.) wall thickness and 76.2 mm. (3.00 in.) outside diameter. The top and bottom plates are 6.35mm. (0.25 in.) thick and the intermediate plates are 1.59 mm. (0.0625 in.) thick. The whole structure is 9144 mm. (360 in.) long

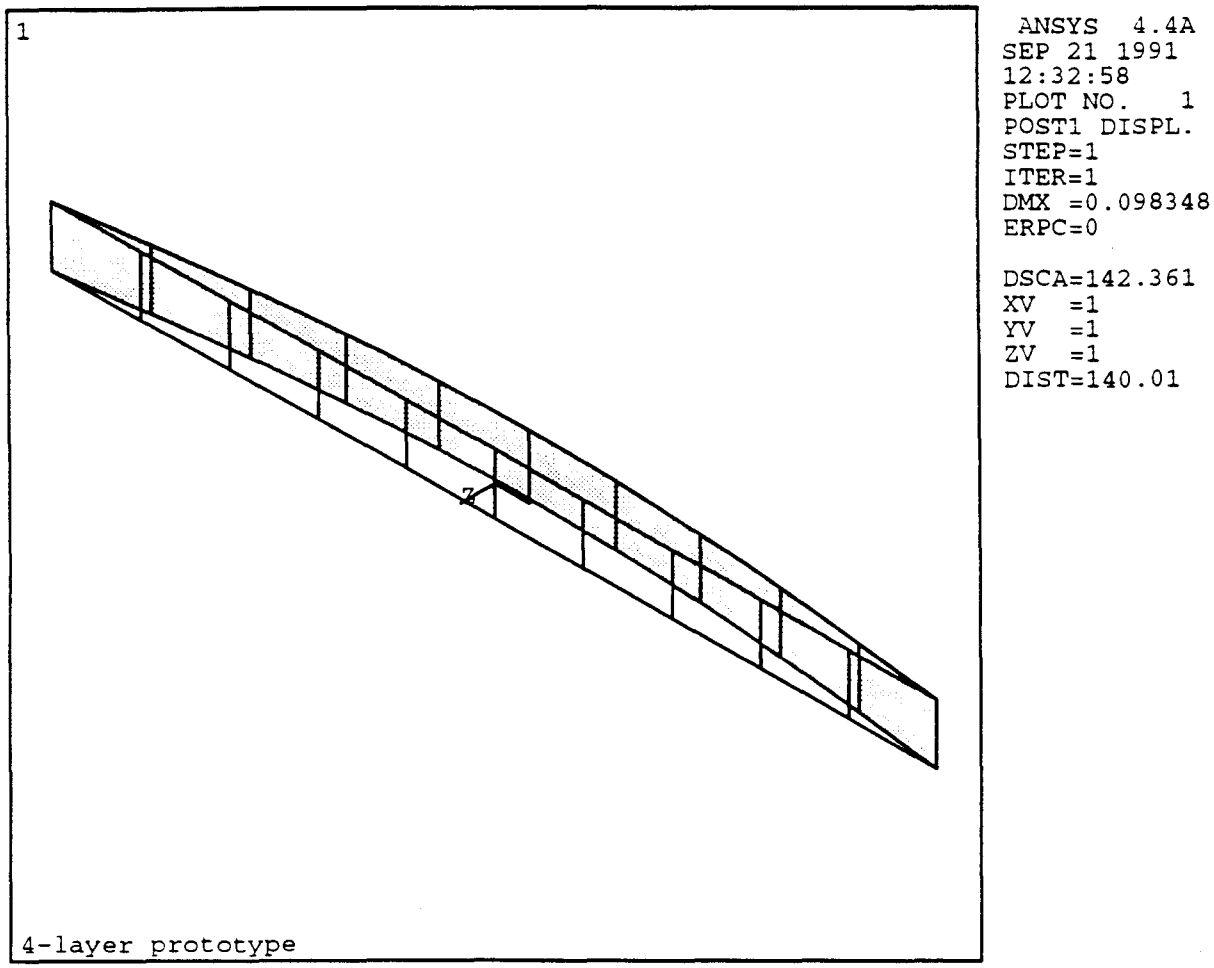

Figure 2: Test of FEA on the 4–layer prototype beam using equivalent shell elements. Note that the deflection is essentially identical to that found from classical beam theory (see text).

(In this and other Ansys output, the maximum deflection is listed as DMX. Also note that in this example, the deflection is given in inches.)

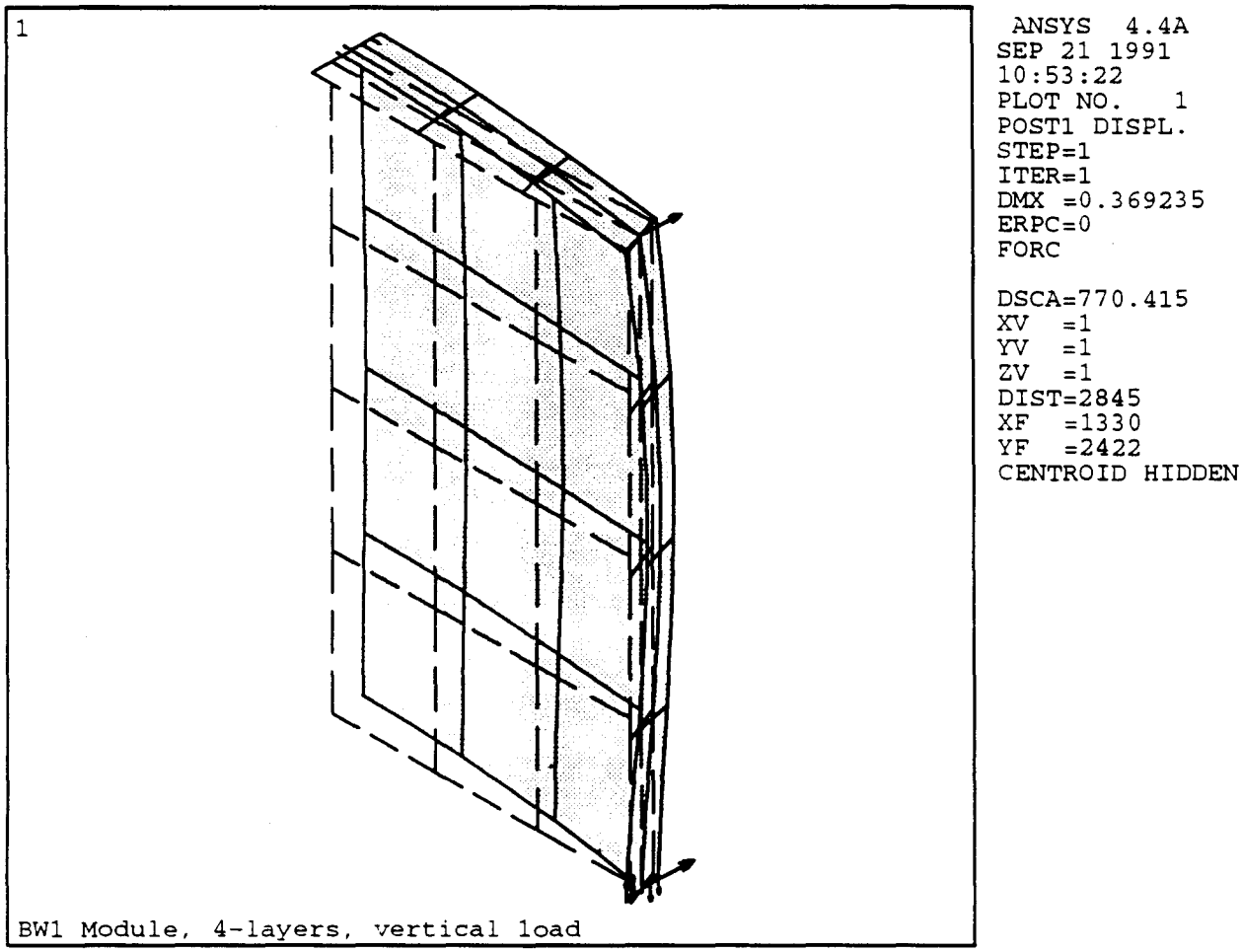

Figure 3: FEA of a 4–layer BW1 module. Only one quadrant is shown. The maximum deflection DMX is given in millimetres. This module is the one at the top position in the barrel. The overall dimensions of this module are 5186 mm. (θ–direction), 9687 mm (axial direction) and 322 mm. thick.

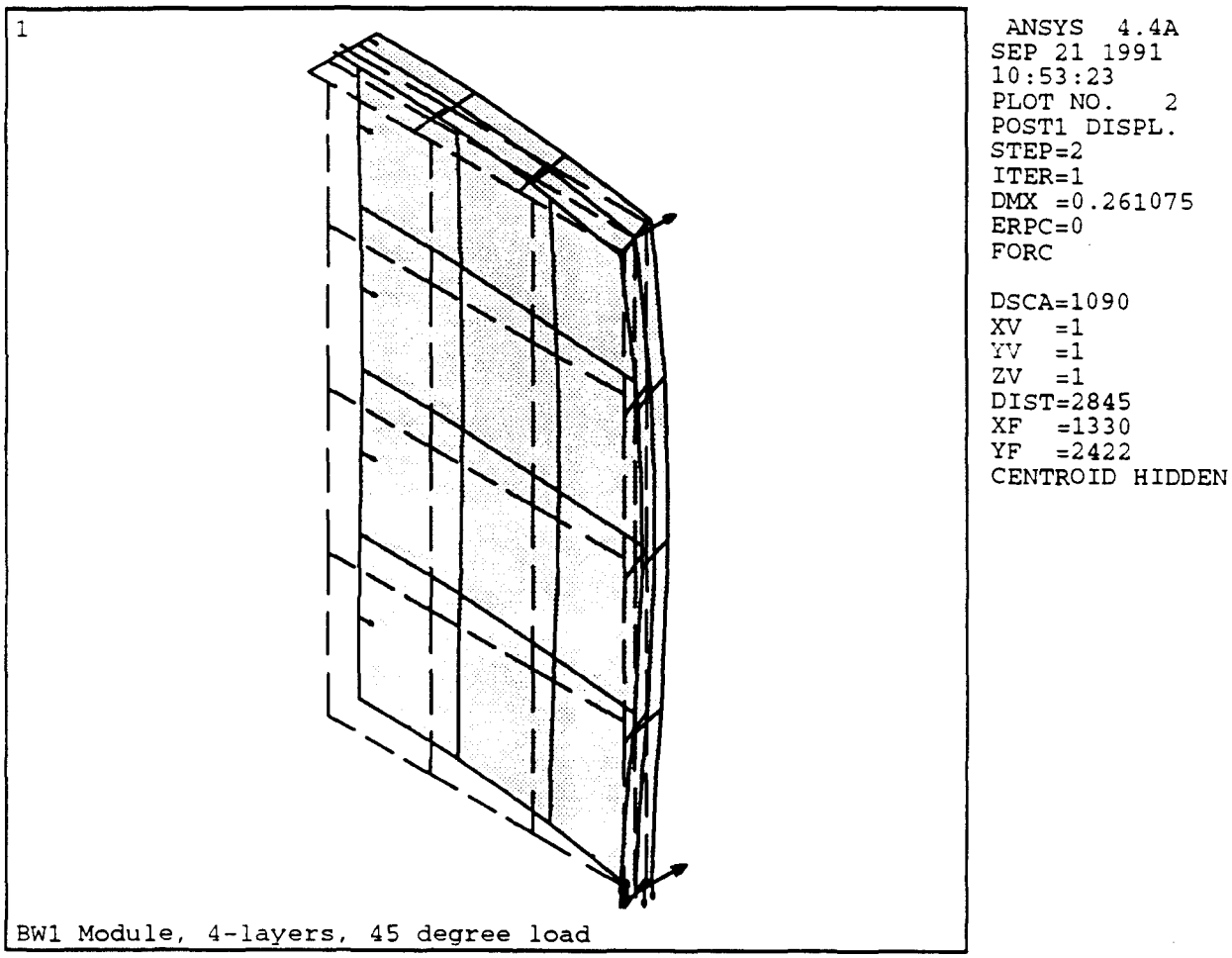

Figure 4: FEA of a 4–layer BW1 module. Only one quadrant is shown. The maximum deflection DMX is given in millimetres. This module is the one at the top, right position in the barrel.

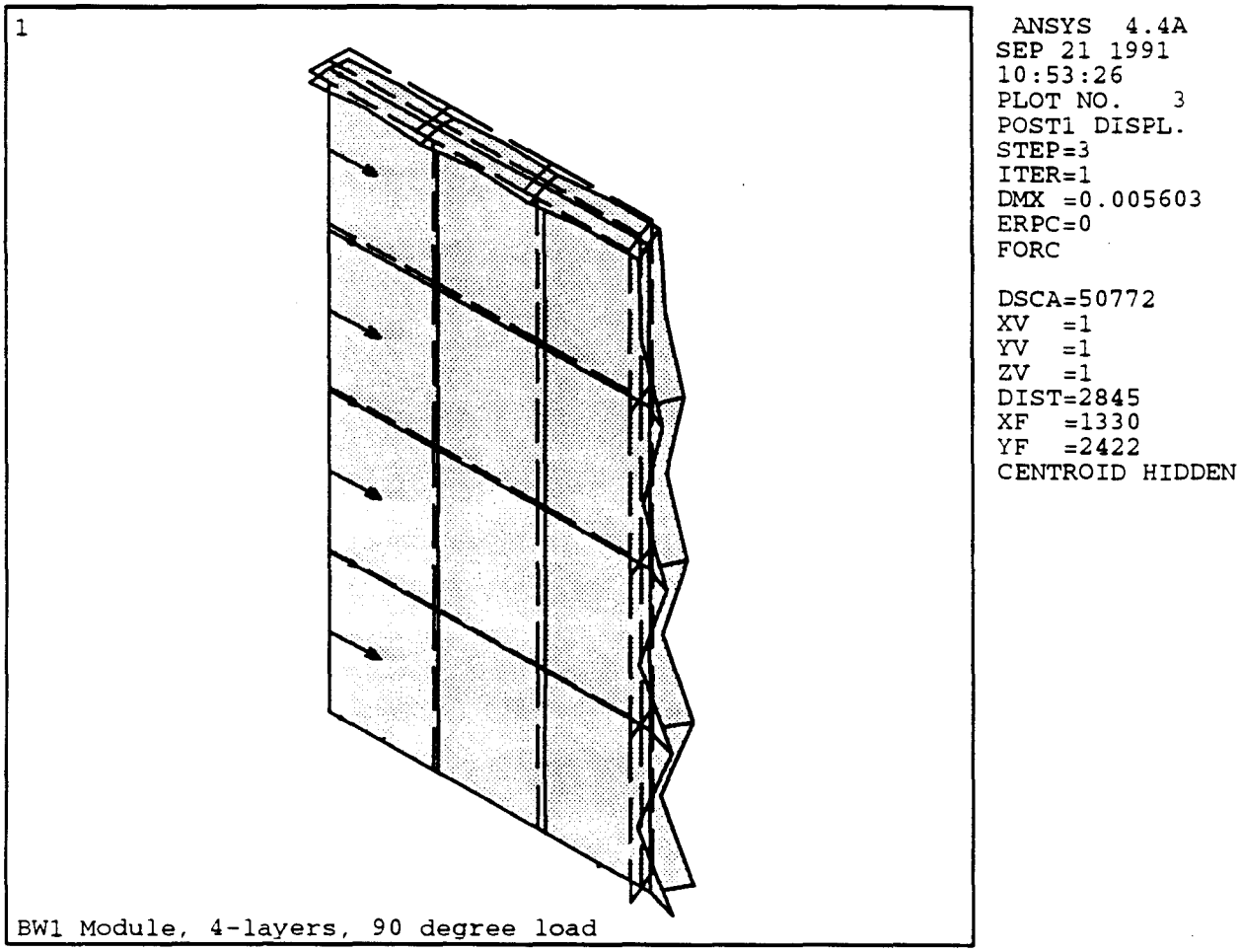

Figure 5: FEA of a 4–layer BW1 module. Only one quadrant is shown. The maximum deflection DMX is given in millimetres. This module is the one at the right side position in the barrel.

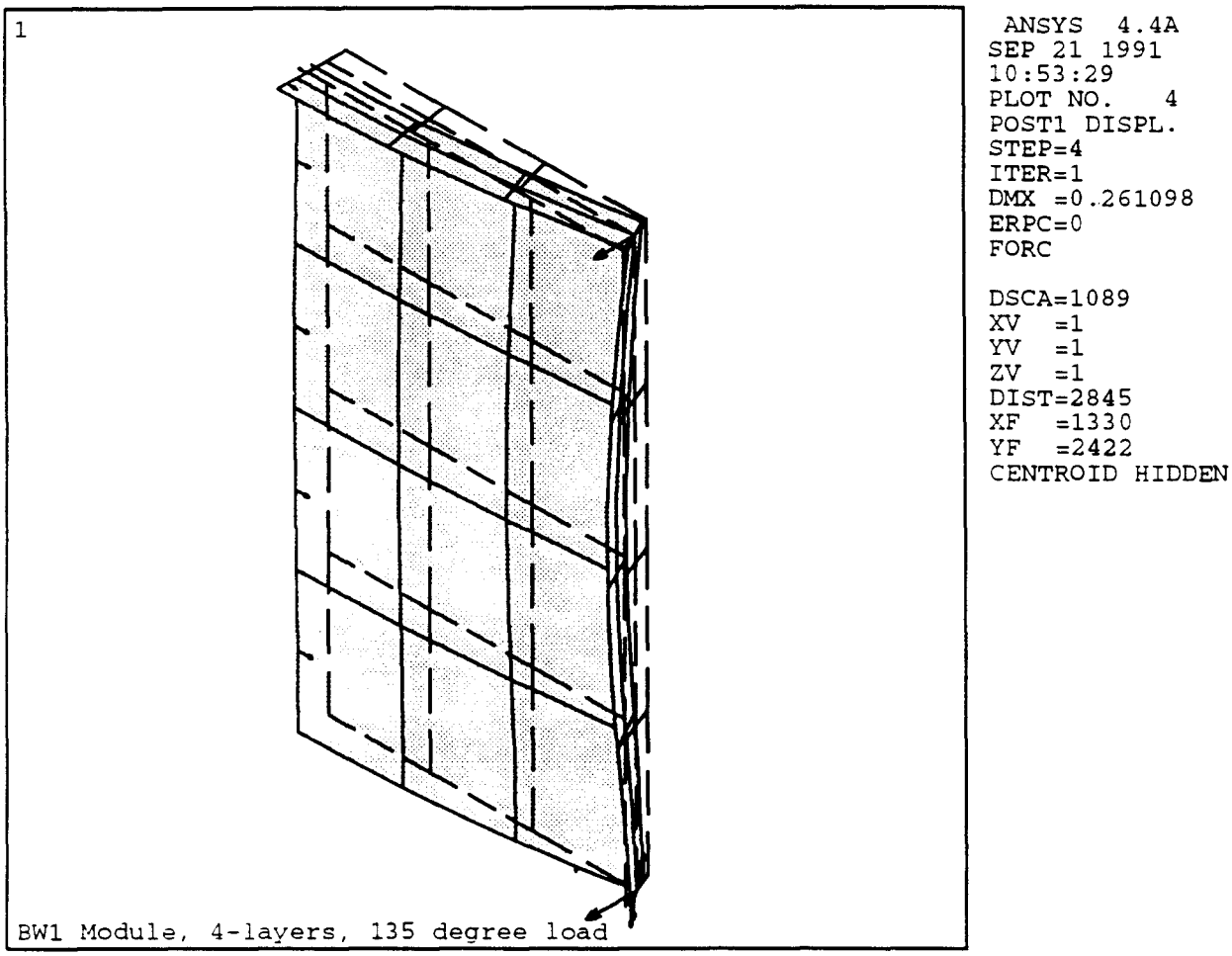

Figure 6: FEA of a 4–layer BW1 module. Only one quadrant is shown. The maximum deflection DMX is given in millimetres. This module is the one at the bottom, right position in the barrel.

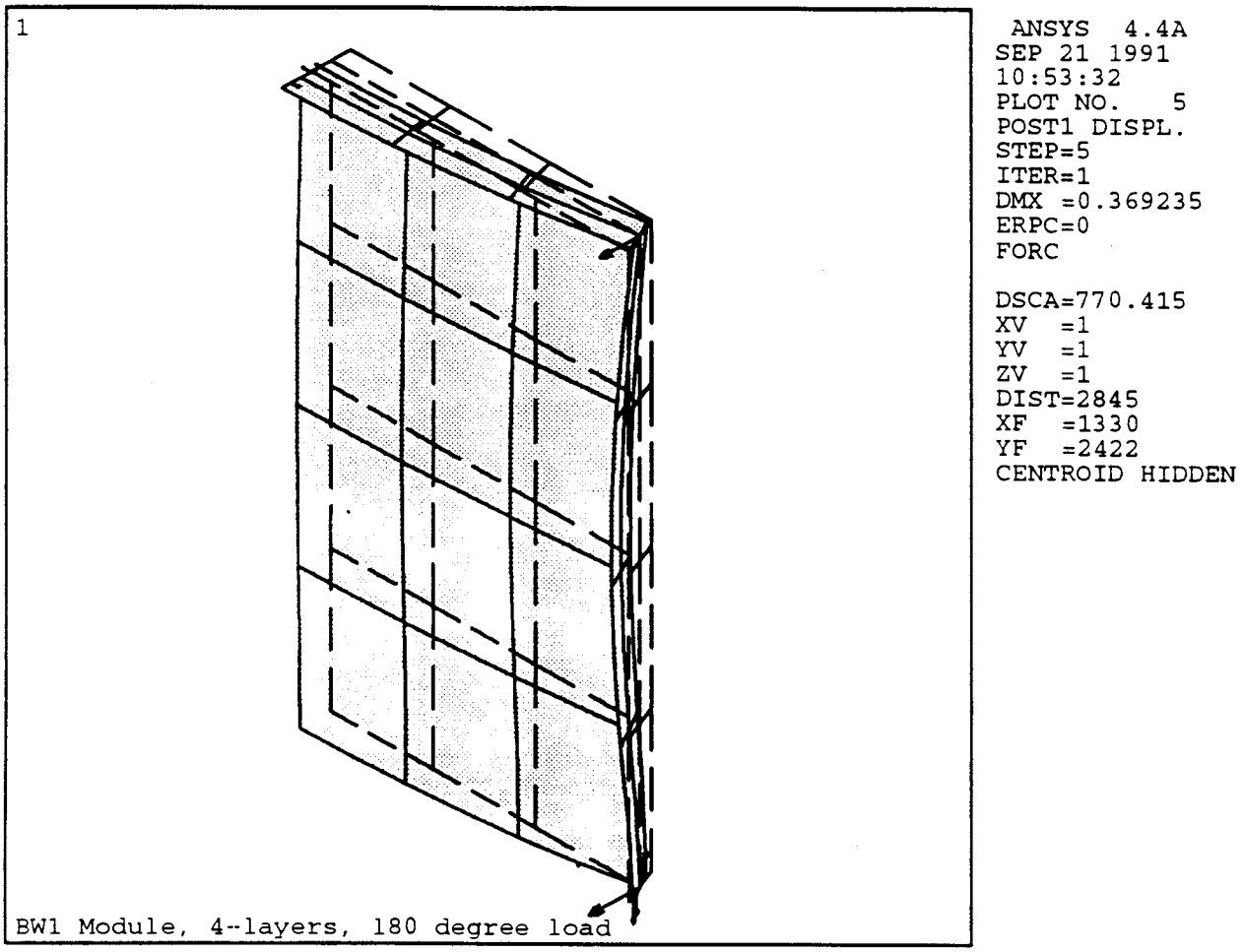

Figure 7: FEA of a 4–layer BW1 module. Only one quadrant is shown. The maximum deflection DMX is given in millimetres. This module is the one at the bottom position in the barrel.

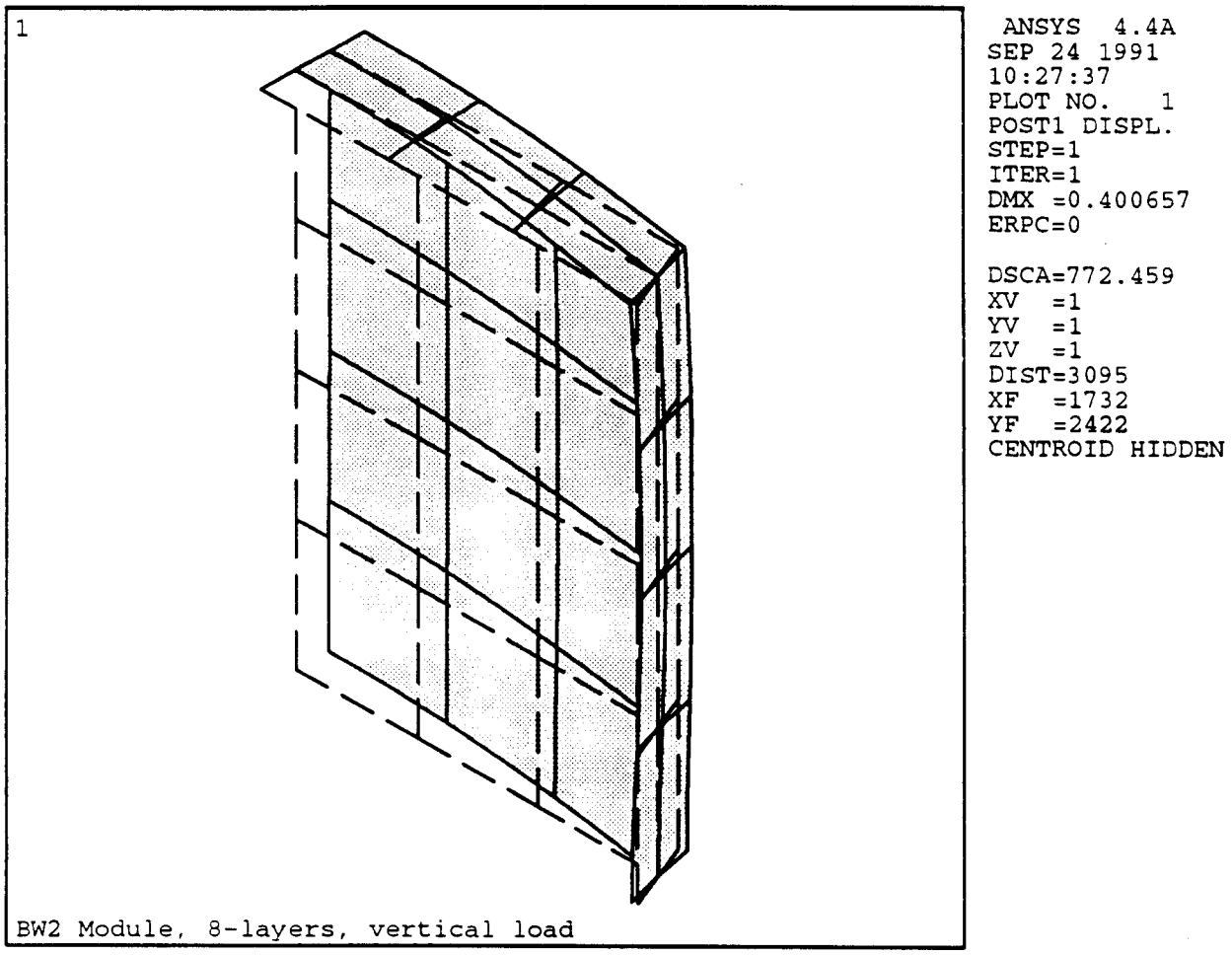

Figure 8: FEA of a 8–layer BW2 module. Only one quadrant is shown. The maximum deflection DMX is given in millimetres. This module is the one at the top position in the barrel. The overall dimensions of this module are 6664 mm. (θ–direction), 9687 mm (axial direction) and 633 mm. thick.

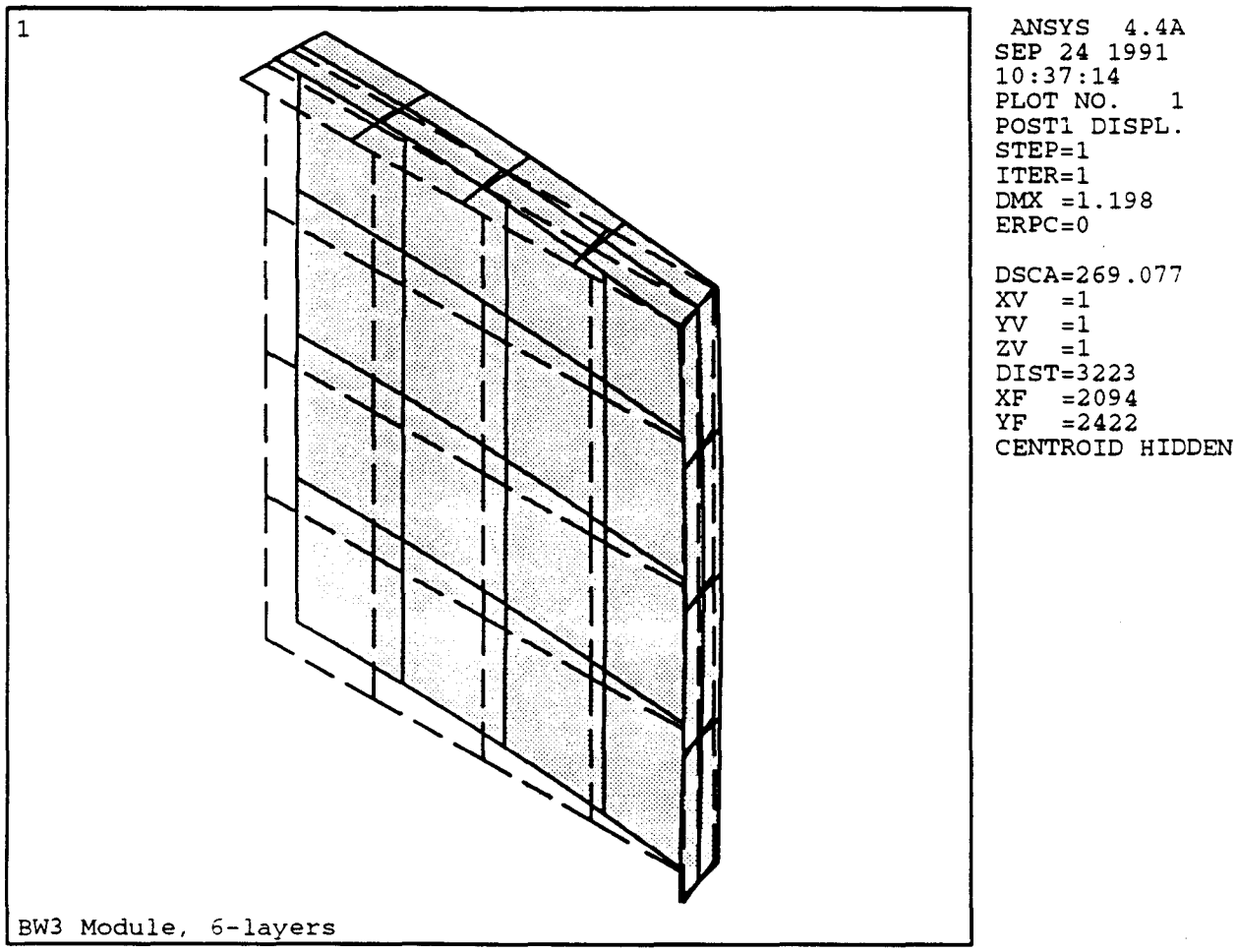

Figure 9: FEA of a 6–layer BW3 module. Only one quadrant is shown. The maximum deflection DMX is given in millimetres. This module is the one at the top position in the barrel The overall dimensions of this module are 8177 mm. (θ–direction), 9687 mm (axial direction) and 478 mm. thick..

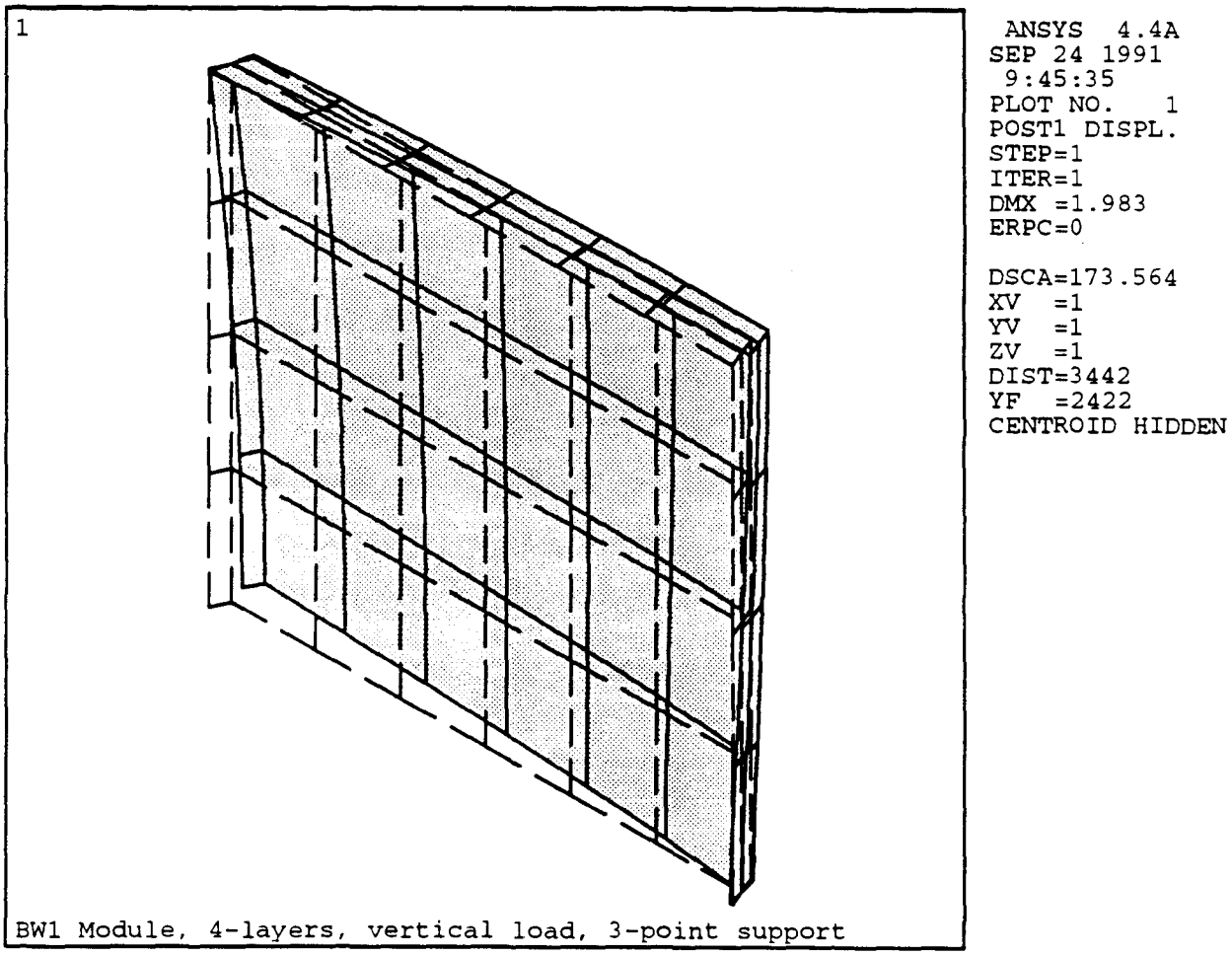

Figure 10. 4–layer BW1 module on 3 kinematic supports. Note that the maximum deflection is 1.983 mm.

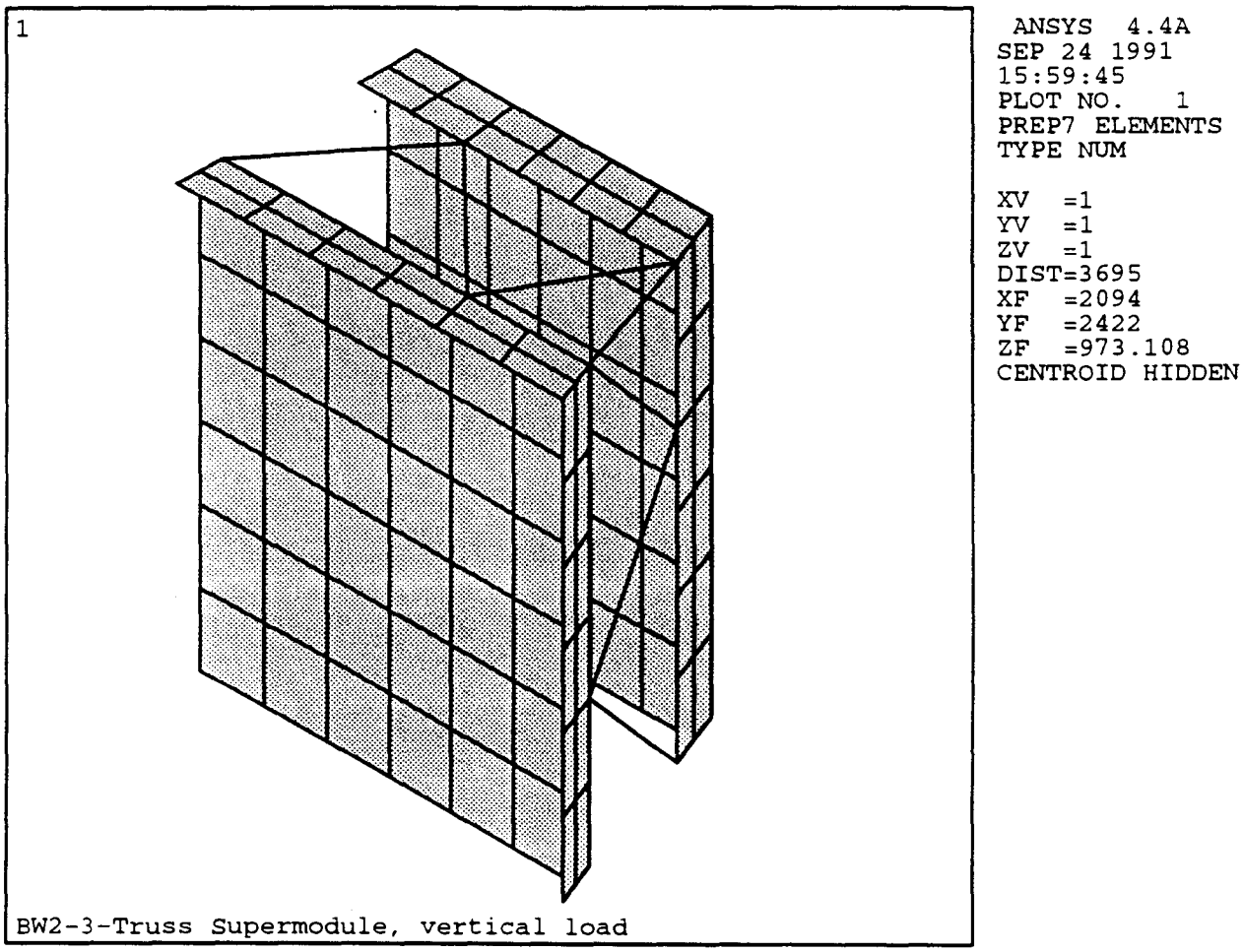

Figure 11. Supermodule composed of BW2 and BW3 modules together with their supporting truss structure. Only 1 quadrant is shown.

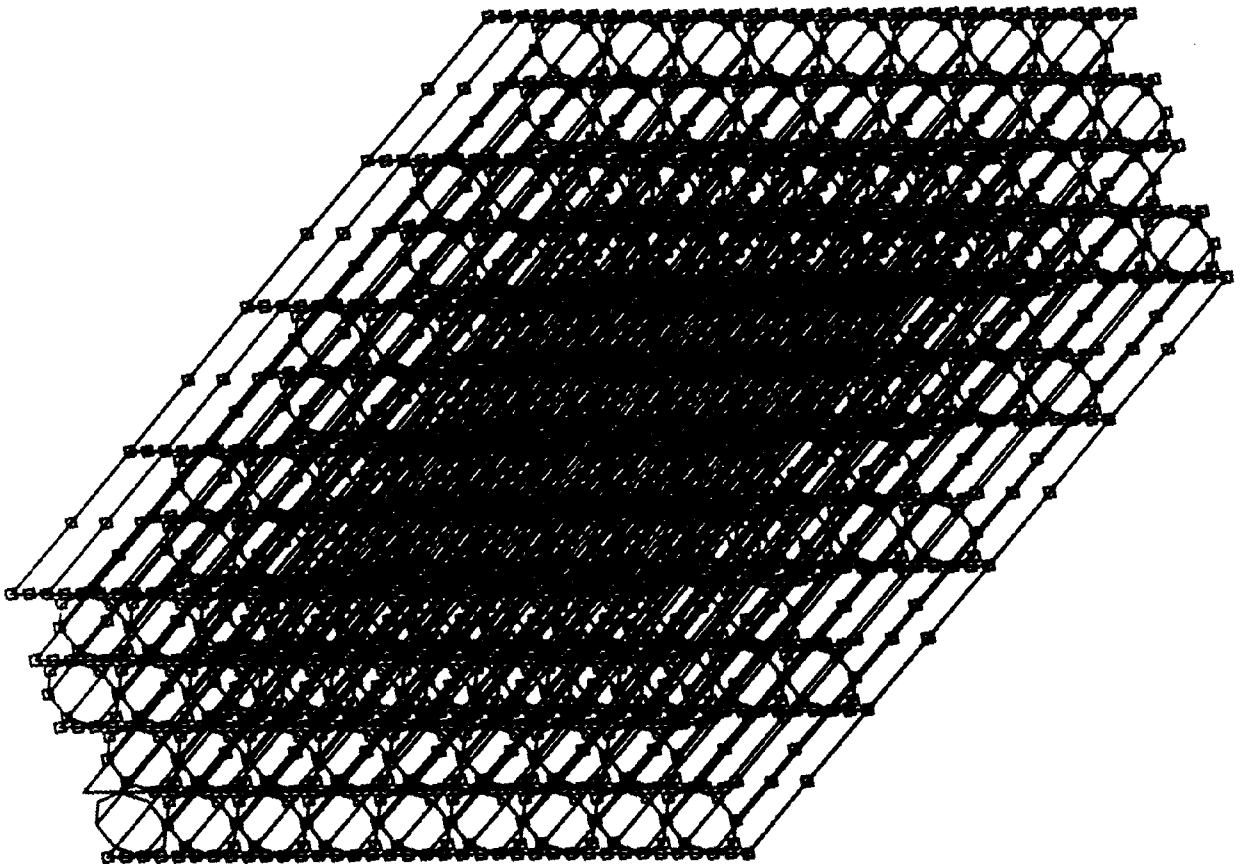

Figure 12. Detailed finite element model of a section of a 4–layer module.