SDC-91-105

SDC
SOLENOIDAL DETECTOR NOTES

SDC MUON BARREL TOROID CONCEPTUAL DESIGN REPORT USING LONG AND SHORT BOLTED BLOCKS

September 25, 1991

Jeff Cherwinka, Editor

SDC Note: SDC-91-105

SDC Muon Barrel Toroid Conceptual Design Report

Using

Long and Short Bolted Blocks

Jeff Cherwinka, Editor

September 25, 1991

Table of Contents

1.0 Introduction 1
2.0 Description of Concept 1
2.1 Block Assembly 1
2.2 Toroid Material 2
2.3 Fabrication 2
2.4 Transportation 3
2.5 Installation of Assembly 3
2.6 Toroid Support 4
2.7 Toroid Coils 4
2.8 Cost and Schedule 4
3.0 Block Options 4
4.0 Corner Connection Options 4
5.0 Z Connection Options 5
6.0 Transportation and Assembly Options 6
7.0 Preliminary Design Issues 6
7.1 Block Size 6
7.2 Plate Thickness 7
7.3 Plate Attachment 7
7.4 Corner Bolting Details 7
7.5 Z Connection 7
7.6 Transportation 8
7.7 Assembly 8
7.8 Cost and Schedule 8
7.9 Magnetic Analysis 8
7.10 Support Base Interface 9
7.11 Calorimeter Interface 9
7.12 Muon Forward Toroid Interface 9
7.13 Coil Interface 9
7.14 Muon Chamber Interface 9
7.15 Utility Interfaces 9
Appendix A - List of References from MBT Review Process 10
Appendix B - Draft MBT Support Concept 11
Appendix C - Draft MBT Coil Concept 15
Appendix D - A-87 Material Properties 20
Appendix E - Draft Conceptual MBT Cost and Schedule 24
Appendix F - MBT Specifications 30
Appendix G - MBT Parts and Operations List 34
Appendix H - Drawings 38

1.0 Introduction

The Muon Barrel Toroid (MBT) for the Solenoidal Detector Collaboration (SDC) is an octagonal cylinder made of 18,450 metric tons of steel. The shape, dimensions, magnetic field, and overall tolerances are set in the MBT specifications to meet the physics goals of the detector (see Appendix F). The engineering details such as piece size, piece orientation, piece connection, support strategy, and tolerances must be selected to meet the specifications with a safe, reliable and economical design. This document presents the conceptual design for the SDC MBT. Future design work will refine and detail the long and short bolted block concept into the MBT that will be built. This document highlights some specific areas that will need further work in the preliminary design.

The long and short bolted block concept is the result of combining ideas from the three conceptual design reports submitted to the SDC MBT Conceptual Design Review Committee, from the committee's recommendations, and from an independent study funded by the SSCL (see Appendix A for references). This concept is certainly not the only good way to build the MBT, but it is one way that appears likely to provide a high quality, cost effective MBT for the SDC. While it is not possible to foresee every problem that could arise at the concept stage, a great deal of effort has gone into the review of the ideas in this concept.

2.0 Description of Concept

2.1 Block Assembly

In the long and short bolted block concept the MBT is assembled from 224 blocks of three types. Appendix H contains drawings of the barrel assembly, the blocks, the plates, and joint details. The top, bottom and two vertical sides of the octagonal cylinder are each made from 37 trapezoidal long blocks. Each of the 148 long blocks has a length that tapers from 7240 mm to 10240 mm, a height of 1500 mm, a width of 800 mm and a weight of 82.3 metric tons. The 45 degree sides of the octagonal cylinder are each made from 18 short thick blocks and one short thin block. Each of the 72 short thick blocks has a length that tapers from 2998 mm to 5998 mm, a height of 1500 mm, a width of 1600 mm, and a weight of 84.7 metric tons. The four short thin blocks have the same length and height as the short thick blocks, but the width is 800 mm so the weight is 42.4 metric tons. The location of the short thin blocks alternates from one end of the cylinder to the other as you go around the octagon. The short thick blocks tie each 800 mm thick octagonal ring to the adjacent up stream ring in two places and to the adjacent downstream ring in two places. Using thick short blocks keeps the piece count near the minimum by keeping all the block weights near the limit of the lifting capacity of a 100 short ton crane.

The blocks are made up of trapezoidal plates with a height of 1500 mm and a thickness of 160 mm. These plates will end up with their large faces perpendicular to the beam axis in their assembled position. The long blocks are made from 5 plates held together with 12 bolts and two pins. The short thick blocks are made from 10 plates held together with 8 bolts and four pins. The short thin blocks are made from 5 plates held together with 8 bolts and two pins. There are a total of 740 long plates and 740 short plates. The bolts serve to flatten the plates as well as hold them together. The pins prevent the plates from slipping due to vibration loading from machining, transportation, and installation. The pins also provide a stronger material for the corner bolts to thread into. There are a total of 2,384 flattening bolts and 616 pins.

The blocks are held to each other with corner bolts and Z bolts. There are eight corner joints in each octagonal ring. At each of these joints a long block must be connected to a short block. The large area of the plates that make up the blocks are perpendicular to the joint. Each plate has one counterbored through hole and one tapped hole on each end. The corner bolts pass through the clearance hole in the plate of one block, perpendicular to the joint and into the threaded hole in the plate of the other block. The bolts used are high strength due to the large moments at the corners. There are a total of 2,960 corner bolts. There are some problems with threading high strength bolts into soft magnetic steel. The anti-vibration pin is placed in line with the corner bolts so the threads can be made in the alloy material of the pin. There is also a considerable shear load that must be carried by the joint. The friction at the joint can carry much of the shear but a shear step is included in the design. The long blocks have a 25 mm notch that accepts the 25 mm bump on the short blocks. This shear step also aids in the assembly process. The Z connection of the blocks is partially accomplished with overlap of the short thick blocks. The short blocks are also bolted together in the Z direction. Each short block is connected to the adjacent short block by 6 bolts. These bolts go into pockets on one block, through a holes in the last plate of the block, into the holes in the adjacent block, and nuts in the pockets in the adjacent block. The bolt pockets are three plates long while the nut pockets are only one plate long. This Z connection can be used to pull the blocks together. The pockets can be plugged with magnetic iron for operation of the magnet. The bolts can be inspected and retightened as required. In all there are 432 Z bolts.

2.2 Toroid Material

The material used for the barrel will most likely be 1010 steel from the U.S.A. or A-87 steel from the U.S.S.R. Some material properties are included in Appendix D for A-87. The bolts should be high strength to reduce the area of steel with poor magnetic properties.

The pins should have sufficient strength to develop the full strength of the corner bolts. Due to their large diameter the magnetic properties of the pin should also be considered in material selection.

2.3 Fabrication

The fabrication of the MBT will start with hot rolled steel plates. The plates will be nominally 160 mm thick. It may be possible to use side rollers to control the plate width to 1500 mm. The rough shape of the plate would be cut with an Oxy-Fuel torch. The pockets for Z connection can be rough cut along with the profile. It may also be beneficial to rough in the pin hole. The plates would then have the flattening bolt holes, flattening bolt counterbores, rough pin holes, and possibly a reference surface machined. The plates would be stacked, pressed, and bolted together into blocks. The blocks would be inspected to insure the gaps between the plates are small enough to meet specifications. The plates for the blocks that make up the central three rings will need to be machined on their large faces before assembly to prevent projective gaps at the center of the MBT. The first operation on the assembled blocks will be to line bore the pin hole and press or shrink fit the pin. The pin will keep the relative alignment of the plates before, during, and after machining. The joint faces of the blocks and the large faces of the blocks will need to be machined. Since the short thick blocks span two long block faces at the corner joint, it may be desirable to machine the joint faces of adjacent large blocks in pairs to reduce the step and slope variations that the thick short blocks need to bridge. The other block faces may also be machined depending on the surface quality achieved in the forming and cutting process. After the joint face is machined the holes for the corner bolts can be made.

Machining details for muon chamber track mounting, calorimeter track mounting, coil mounting, end toroid support connections, and barrel toroid support connections should be added as required. The premachining of as many details as possible will reduce the assembly work in the hall. As the blocks are completed they will be inspected. The first group of blocks produced will be used to do a vertical test assembly. This assembly will be completed and approved before additional blocks are fabricated. The purpose of the vertical ring assembly is to verify the corner joint design and manufacturing. After successful completion of the vertical ring assembly, completed blocks will be checked as ring assemblies horizontally or vertically. The block fabricator will deliver the blocks to port in groups for shipping.

2.4 Transportation

The completed blocks will be transported by boat to a port on the gulf coast of Texas. The main storage facility for the blocks will be at the port unless it is shown that major storage at the SSC site is more economical. There may still be a need for some surface layout/storage area for the steel on site. When the hall has been completed to the point of beneficial occupancy, blocks will be shipped to the site. Trains will be used to take the blocks in sets of 12 from the port storage area to a side rail at the train terminal in Midlothian. Heavy haul trucks will be used to take the blocks from the train terminal to the head house. The blocks will be lowered directly into the hall. The buffer for assembly will be the 25 m by 31 m area at each end of the detector pit. The blocks will be unloaded from the ship and loaded onto the trains with port cranes. Unloading from the train and loading onto the trucks will be done with jacking and skidding. The blocks will be lowered into the hall with the head house crane.

2.5 Installation of Assembly

There are 224 blocks to assemble into the MBT. At a rate of 4 blocks per day the assembly would require 56 work days (a little less than 3 months). Allowing time for start up and errors suggests a five month schedule. By starting in the center and working out it will be possible to use two crews operating the two hall cranes. Each crew has four hours to orient, lift, position, place and bolt a block. This is ambitious but certainly possible. The first phase of assembly will be to install all the long blocks for the bottom octant. This will tie the MBT to it's support while there is a minimum amount of evenly distributed load. The next phase is the installation of the short blocks for the two lower 45 degree octants. These blocks should be installed alternately from side to side to keep the structure balanced. The Z connection between these blocks should be completed to provide some stability for the upper structure as it is completed. Temporary supports may be needed to align and support the blocks as they are being installed, but they should not be needed after the block is bolted into position. A thin piece of aluminum measuring 5 mm by 29600 mm by 2121 mm is installed on one of the joint surfaces of the short thick block. This will be used to measure the uniformity and magnitude of the magnetic field. The remaining five sides of the octagon are assembled one ring at a time using a support frame that holds the blocks in position while they are bolted together. The frame would ride on the three completed sides of the octagon. The frame would need to be adjustable so it's size could be reduced for moving to a new Z position and increased to an "undeflected" position for ring construction. The corner bolts will need to be installed and tightened as each ring is assembled. The stability of the rings in Z is provided by the completed lower 3/8 of the barrel. When all the rings are completed, the remaining Z connections can be installed. After assembly the bolts should be checked for tension and retorqued if needed.

2.6 Toroid Support

The support for the MBT will be two plates radially projective from the beam line. There will be one plate supporting the full length of each of the bottom corners. The support will need to have an adjustable height so the detector can be kept on beamline even if the floor moves. An initial concept for the details of the MBT support is included in Appendix B.

2.7 Toroid Coils

The coils for the MBT will drive the iron to an average flux density of 1.8 T. There are two coils on each side of the octagonal cylinder for a total of 16 coils. These coils will need to be assembled onto the barrel after the steel is completed. To accomplish this the coils are constructed as two half coils that each are joined by a mechanical joint at each end. An initial concept for the details of the MBT coils is included in Appendix C.

2.8 Cost and Schedule

The cost and schedule for the MBT are important considerations. The cost estimate for the long and short bolted block concept is presented in Appendix E. The cost estimate was based on all U.S. vendors. A conceptual schedule is also included in Appendix E. The schedule has some flexibility. The preliminary schedule provides for completion of block delivery for an assembly start up April, 1996 and a five month assembly time from the completion of support installation to the start of coil installation.

3.0 Block Options

The basic concept described above uses short thick blocks arranged to help tie the long blocks together in Z. This concept means the rings are no longer free to move independently. The advantage of this is that the MBT will act more as one homogeneous structure. The disadvantage is that there is a greater potential for tolerance problems and non-uniform loading from deflections during assembly. If further investigation shows the disadvantages outweigh the advantages, then the location of half the short thick blocks can be shifted to make 19 independent rings 1600 mm thick. Eighteen of the rings would be made up of 8 long blocks and 4 short thick blocks. The remaining ring would contain 4 long blocks and 4 short thin blocks. This shift keeps the advantages associated with the lower 224 piece count allowable with short thick blocks. A design that uses all short thin blocks (822 mm thick) and all long thin blocks (822 mm thick) has a piece count of 288 blocks. By machining the long blocks in pairs it should be possible to reduce tolerance problems so the short thick blocks can be used.

4.0 Corner Connection Options

The long short corner joint has the advantage that the bolts are perpendicular to the joint. However, the load on the bolt is not pure tension. The shear at the joint is carried mostly by the shear step.

Some of the shear is carried by friction in the compression side of the joint. As the joint slips to load the shear step, a secondary moment will develop in the corner bolts. To

reduce the slip that the bolt has to contend with it may be a good idea to change the shear step to a shear key at the center of the joint contact area. A key would require less machining, but the tolerance issues for a key are more complicated. The slip from a tight fitting key would be less since the distance to the bolt would be less, but the strain would be the same. A key made up of two wedges would insure a key with a tight fit.

High strength bolts are needed in the corner to carry the loads. Special provisions must be taken to insure that the full strength of the high strength bolt is developed in its use with soft magnetic steel. One way to insure this is to use an alloy rod as a nut. In this concept the alloy rod serves both as a nut and as a pin to lock the plates together. If this idea is discarded for some reason, the spiralock thread form should be considered as a way to develop the full strength of the high strength bolts with specially tapped threads in mild steel. The other end of the bolt should also be considered. The washer under the bolt should be sized so the soft iron is just at it's yield point when the bolt is at proof load. If an overload condition develops at the bolt the soft iron could yield to relieve the load instead of breaking the bolt.

The bolts used for the corner can be socket head caps, hex head caps, or some special bolt. Since the magnetic steel has a low yield point, the bearing area of the head needs to be large. While a hex cap provides a large bearing area, the tools required to tighten a conventional M56 hex cap are large and heavy. An alternative would be to use a multi-jackbolt tensioning device such as Superbolt. The heads on these bolts have a ring of tapped holes filled with small jack bolts around the perimeter. The advantage of this system is that the torque required to tighten the jack bolts can be applied by a single person with a hand wrench while the hex caps would require a hydraulic wrench.

The shear connection between the plates comes from the friction created with the bolt pattern and the shear in the pin. With the bolt pattern in the conceptual design the bolts alone do not create enough friction to prevent the plates from slipping relative to each other if a block is handled roughly. There are concerns that the boring and assembly of the pin may be a difficult operation. Another possibility for additional shear connection would be to mill slots and install press fit keys in the ends of the blocks. With this alternative a more loosely fitting barrel nut could be used. Placement of the keys to carry the shear in both directions is important.

5.0 Z Connection Options

The staggering of the short thick blocks in this design provide some Z connection. The floor and support design will help determine what level of Z connection is required. A flexible toroid has the advantage that it can conform to a changing support configuration without developing high stresses. There is a lower limit to stiffness that is adequate to prevent the rings from toppling over like dominoes. The moving calorimeter and muon forward toroids could produce sizable axial loads. The short Z bolts in pockets between the short thick blocks provide a substantial Z connection that is accessible even after assembly. However, the pockets present a magnetic gap that needs to be filled with a plug. Instead of bolts in pockets, Z bolts that go through the block into the adjacent piece could be used. These would have to thread into the steel of the other block. Special threads such as Spiralock or threaded inserts would be needed. This type of special thread could also be used with the pocketed Z bolts instead of the pocketed nut. An alternative way to connect the short blocks would be to use high strength plates parallel to the beam line on the surface of the steel. There is 200 mm between the steel surface and the muon chambers in many places. The plates would be attached to the steel with bolts and pins that go through the cover plates and into holes in the steel blocks. These bolts and pins would carry the loads

in shear and friction. This idea does not present a way to preload the joint. Still another idea is to run cables or bolts from one end all the way to the other end of the toroid. This requires large holes in the blocks that line up from one end to the other. These cables would be installed and tightened at the end of the assembly so temporary Z restraint would be required.

6.0 Transportation and Assembly Options

The transportation plan outline above assumes the blocks are delivered by boat. If for some reason the blocks are fabricated in the U.S. it may be better to do all the transportation by rail. Storing the blocks at port is an attractive idea since ports are often set up to handle large pieces efficiently. Storing the blocks on site at the SSCL would most likely require some ground preparation, additional handling, and additional crane purchase. Even with port storage some surface area may be required on site for layout and/or storage.

The use of the Midlothian train terminal is based only on the recommendation of one vendor. A study of the truck routes from the train terminal to the site needs to be done. It may be that a train terminal farther away has a more direct truck route due to weight limitation on roads and bridges. It would be very nice if the SSCL decided it needed a rail head at the site location. Rail service to the site would certainly benefit the MBT, but it could also help other systems and other detectors. The use of the train cars as a buffer at the train terminal was suggested by the rail company. The height of the rail car allows simple jacking and skidding to be used to move the blocks from the rail car to the truck. While it is certainly possible to use a crane for this operation, the expense of crane rental and hooking up the rigging for each block is not necessary. The unloading of the blocks directly into the hall has two advantages. First, the amount of surface crane coverage is minimized. If the blocks are stored in a buffer on the surface, this buffer must have crane coverage. Second, the closer blocks are stored to the final use point the better. If the surface crane should have a problem and the blocks are stored above ground assembly must stop. With in hall storage, work could continue. There may be conflicts with accelerator assembly or hall utility installation with an in hall block buffer. If this is the case a small above ground buffer with crane coverage will be needed.

While it may be possible to assembly the MBT completely from the center out with complete ring segments, there is a problem with this approach. The support is loaded very unevenly from the center out. This will affect the load distribution in the support, and will make it very difficult to install the the end bottom blocks.

7.0 Preliminary Design Issues

The design process has been taken far enough to check the feasibility of the concept presented above. The preliminary design effort should optimize the design and verify it through methodical analysis of all relevant issues. The concept should be maintained through the preliminary design unless a fatal flaw is found. The following list contains items that were identified as needing detail study in the conceptual design process. As the preliminary design matures, other issues will no doubt be identified.

7.1 Block Size

Verify that the limit for a block of 100 short tons including rigging is the right size. As the block size increases the cost for cranes, and crane supports increase, but the number of

pieces required is reduced. The reduction in piece count produces savings in machining, bolt count, and assembly time. The effect on transportation cost is unclear since the price per piece rises while the number of pieces falls. The 100 short ton number should only be changed if there is significant economic benefit since, it affects many systems.

7.2 Plate Thickness

Optimize the plate thickness. The plate thickness determines how many plates there are, the load required to flatten the plates, and the maximum size bolt that can be used in the corner. As the plate thickness increases, the flatness tolerances achievable at the steel mill degrade, and the plate stiffness increases, resulting in a rapidly increasing load requirement for flattening. As the plate thickness decreases, the number of plates required increases and the diameter of the bolt that can be used at the corner decreases. The number of bolts that can be placed in a line of bolts is inversely related to the diameter. The strength per bolt is related to the diameter squared. The net result is that the strength of a line of bolts is directly related to the diameter of the bolt. The strength required for the corner bolts will set a minimum diameter. That will also set a minimum plate thickness. The 160 mm plate thickness used in the conceptual design is a first pass at a plate thickness compromise.

7.3 Plate Attachment

The flattening bolt size, flattening bolt pattern, and shear connection between the plates need to be studied. The initial bolt size and location shown on the drawings in Appendix H are based on a two dimensional flattening analysis of plates made to ASTM standards. While there is some information available on the U.S.S.R. plate included in Appendix D, more information will need to be gathered. A three dimensional analysis that deals with plate curvatures will also need to be done to size the bolts. The required shear connection between the plates, and the effectiveness of both the pin and bolt friction in carrying this shear need to be investigated.

7.4 Corner Bolting Details

Select the bolt diameter, bolt grade, hole size, rod alloy and thread detail. The analysis to date has been mainly two dimensional and static. There will be loads on the corner bolts resulting from tolerance variations on the blocks and floor motion. To study these loads a three dimensional model will need to be used. The additional corner bolt loads resulting from magnetic forces, the calorimeter, the muon chambers, and the forward toroids will also need to be considered. The M56 size used in the conceptual design is more than what is required to just react the moment at the corner due to gravity, but it may not be large enough for all the unaccounted loads.The pin in the concept acts as both a shear pin and a nut for the corner bolts. The diameter, material , and location of the pin need to be studied in conjunction with the corner bolting.

7.5 Z Connection

While the short pocket bolt concept was used in the conceptual design, the alternative presented in the options section should be considered. The first step in selection is to determine the actual amount of connection required. The main problem will be determining the possible loads resulting from floor movement, but calorimeter and forward toroid loads

should also be considered. As with the corner bolt load determination, a three dimensional model that includes tolerance effects is needed.

7.6 Transportation

The transportation method is almost entirely a matter of cost and logistics. However, some decisions need to be made up front since they affect the surface facility layout. The scenario presented in the conceptual design requires a 100 short ton surface crane and a driveway. The final sizing of the surface crane should consider the size of crane required for other portions of the detector and the cost of short term crane rental. The storage provisions of ports and the railroad terminals should also be investigated more completely in the near future. If on site above ground storage is required, it will have a significant impact of surface facilities. The truck routes available for this size load will also need to be investigated.

7.7 Assembly

The interaction of the support and the MBT during assembly is very important. A study of the loads at all the stages of assembly is needed. While fixtures have been studied for large blocks and thin plates, no fixtures have been designed for the medium size blocks proposed in the conceptual design. The logistics of the assembly process, including crane interference, fixture installation and storage, personnel access, block storage, overlapping accelerator activities, utility requirements, piece installation order, etc...will need to be investigated.

7.8 Cost and Schedule

The management of the SDC will insure that frequent cost and schedule updates are performed. This is of course a very important design issue. Some cost sensitivity study has already been done and is reported in some of the references listed in Appendix A.

7.9 Magnetic Analysis

Since this is a magnet it is important not to lose sight of the magnetic performance in all the mechanical and accounting details. Some investigation will need to be done on the magnetic impact of the pins, flattening bolts, corner bolts, and the chosen Z connection method. The magnetic effects of the gaps between the plates has been studied a little, but this issue should be revisited and documented completely. On a larger scale, the effects of this magnet on the overall system including the end toroids, the superconducting solenoid, and fringe fields will need to be studied. The magnetic field will also have forces associated with it. Studies performed during the conceptual design suggest these forces will be about 10% of the gravity forces. These forces need to be defined and included in the mechanical model. The details of the magnetic uniformity and magnitude measurement need to be refined and the plate and probes need to be designed.

7.10 Support Base Interface

The geometry, connection, and loads at the support base interface should be agreed upon by the MBT steel designers and the MBT steel support designers. The loading during the assembly may be particularly important.

7.11 Calorimeter Interface

The geometry, connection, and loads at the calorimeter interface should be agreed upon by the MBT steel designers and the calorimeter designers. The dynamic loading during the assembly may be particularly important.

7.12 Muon Forward Toroid Interface

The geometry, connection, and loads at the muon forward toroid interface should be agreed upon by the MBT steel designers and the forward steel designers. The dynamic loading during the assembly may be particularly important. Transfer of magnetic loads from one toroid to the other will also need to be investigated.

7.13 Coil Interface

The holes required for the coil mounting should be specified by the coil designer and approved by the steel designer.

7.14 Muon Chamber Interface

The holes required for muon chamber mounting and alignment should be specified by the muon chamber designers and approved by the steel designers.

7.15 Utility Interfaces

There will be penetrations through the steel for other systems such as the solenoidal magnet and possibly some cables. These penetrations may be of significant size.

Appendix A - List of References from MBT Review Process

Many reports were written for the conceptual design review process. There is a great deal of information in these reports that may be useful to the preliminary design process.

1. *SDC Muon Barrel Toroid Conceptual Design with Large Blocks*, Jeff Cherwinka, February 21, 1991, University of Wisconsin Physical Sciences Laboratory and Superconducting Super Collider Laboratory.

2. *SDC Muon Barrel Toroid Conceptual Design with Large Blocks*, (View graphs), Jeff Cherwinka, February 28, 1991, University of Wisconsin Physical Sciences Laboratory and Superconducting Super Collider Laboratory.

3. *Conceptual Design of the Muon Barrel Toroid Steel for the LOI Option 1 SDC Detector*, L.I. Dittert, February, 1991, ICF Kaiser Engineers, Inc., Oakland, CA.

4. *Conceptual Design Studies of the SDC Iron Toroid System (I)*, A. Maki, et al., December, 1990, KEK, National Laboratory for High Energy Physics.

5. *Conceptual Design Studies of the SDC Iron Toroid System (II)*, A. Maki, et al., February, 1991, KEK, National Laboratory for High Energy Physics.

6. *Feasibility of Large Block Design for the SDC Muon Barrel*, Jeff Cherwinka, September 17, 1990, University of Wisconsin Physical Sciences Laboratory, SDC-90-00121.

7. *SDC Muon Barrel Toroid Conceptual Design Review*, W.R. Edwards, et al., March 25, 1991, Final Report of the Review Committee, SDC-91-00015.

8. *SDC Muon Steel Trade Study Evaluation*, T. Adams, et al., March 31, 1991, Science Systems, Martin Marietta Astronautics Group, SSC-91-Z-11103.

9. *Visit to Izhorsky Zavod*, Jim Bensinger, et al., Dec 16 - 21, 1990, Superconducting Super Collider Laboratory.

Appendix B - Draft MBT Support Concept

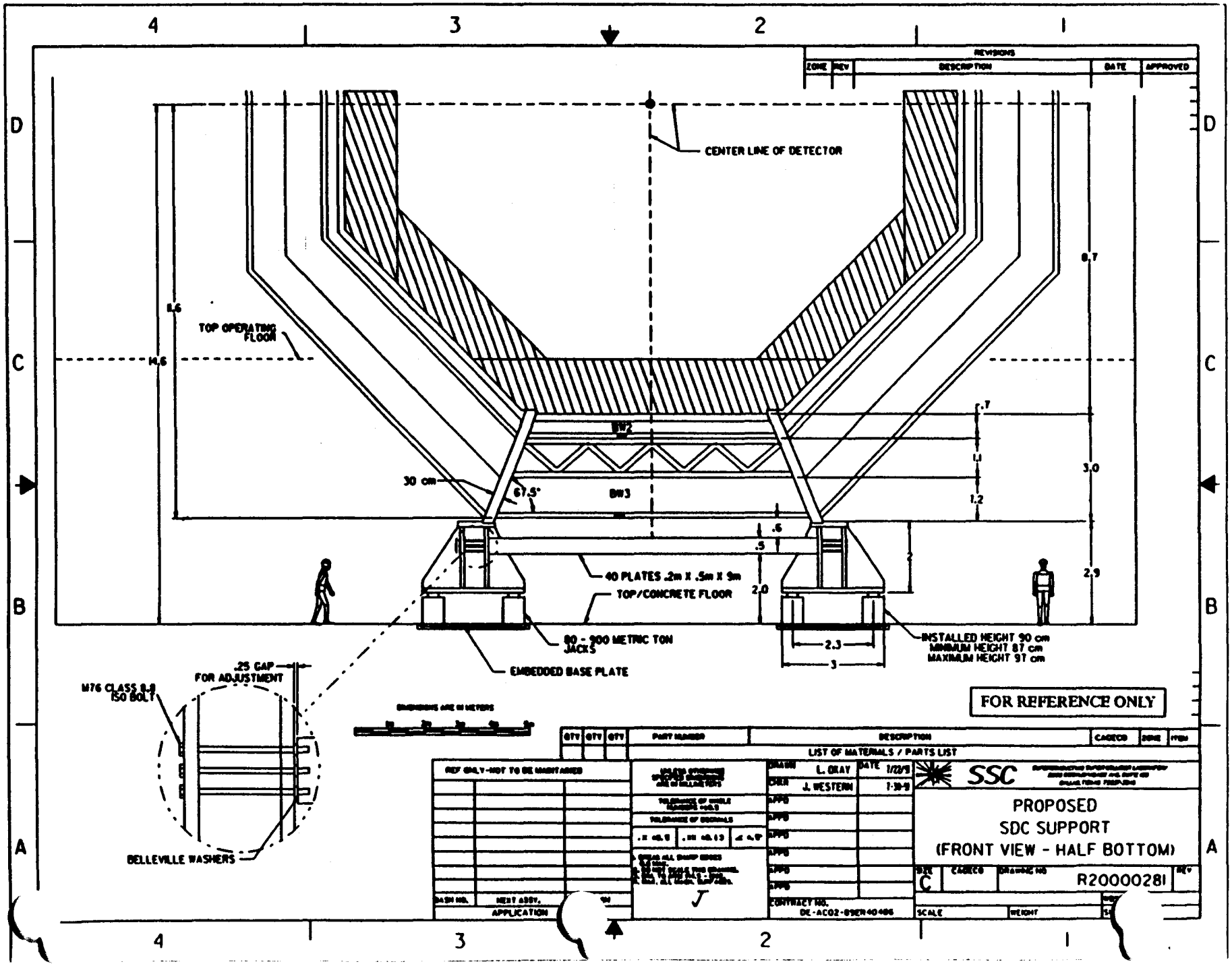
CENTER LINE OF DETECTOR
TOP OPERATING FLOOR
14.6
8.6
8.7
3.0
2.9
BW2
BW3
30 cm
67.5°
.7
1.1
1.2
.6
.5
2
2.0
40 PLATES .2m X .5m X 9m
TOP/CONCRETE FLOOR
80 - 100 METRIC TON JACKS
EMBEDDED BASE PLATE
2.3
3
INSTALLED HEIGHT 90 cm
MINIMUM HEIGHT 87 cm
MAXIMUM HEIGHT 97 cm
.25 GAP FOR ADJUSTMENT
M76 CLASS 8.8 ISO BOLT
BELLEVILLE WASHERS
FOR REFERENCE ONLY
REVISIONS
ZONE
REV
DESCRIPTION
DATE
APPROVED
LIST OF MATERIALS / PARTS LIST
PART NUMBER
DESCRIPTION
CAGECD
REF ONLY-NOT TO BE MAINTAINED
DASH NO.
NEXT ASSY.
APPLICATION
L. OKAY
J. WESTERN
1/22/9
1-30-9
SSC
PROPOSED
SDC SUPPORT
(FRONT VIEW - HALF BOTTOM)
C
R20000281
CONTRACT NO.
DE-AC02-89ER40486
SCALE
WEIGHT

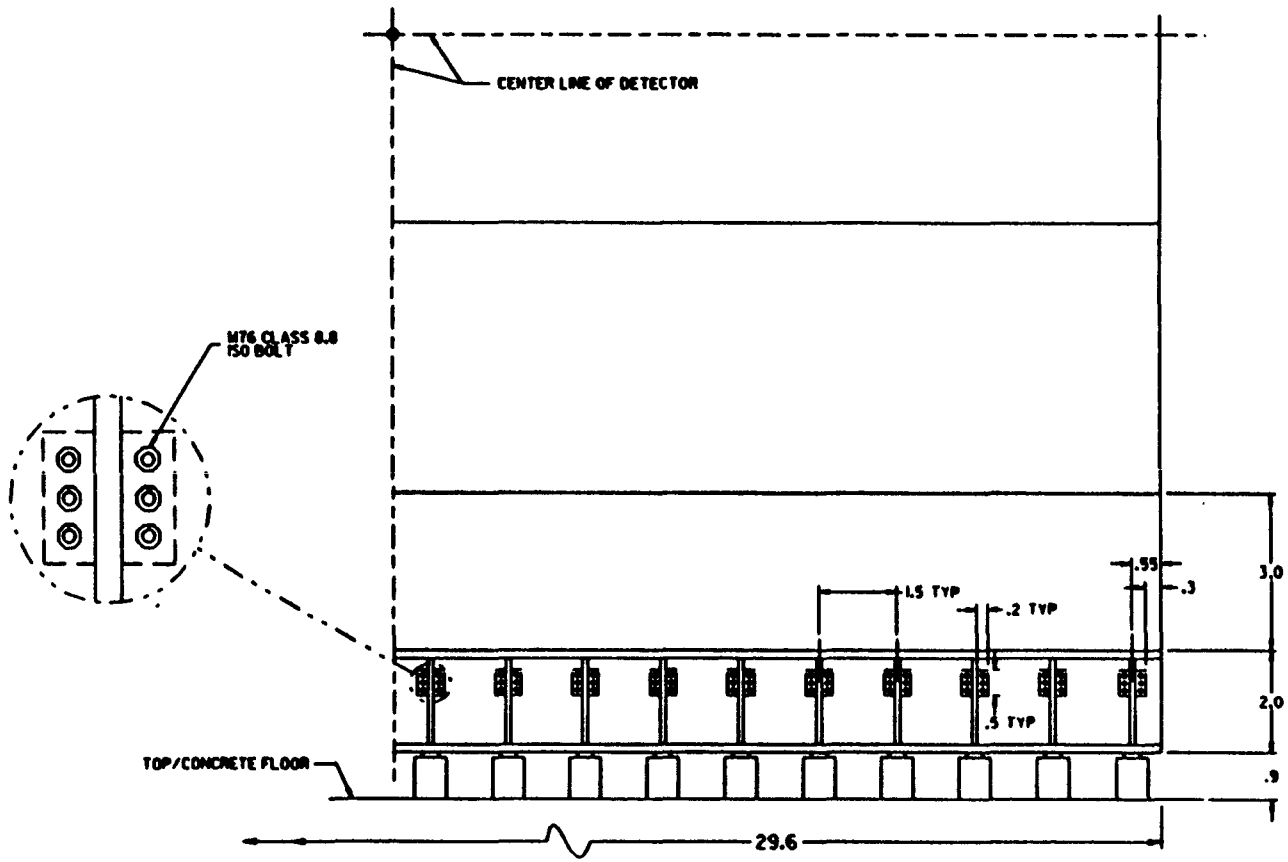

FOR REFERENCE ONLY

ZONE	REV	DESCRIPTION	DATE	APPROVED

REVISIONS

QTY	QTY	QTY	PART NUMBER	DESCRIPTION	CAGECO	ZONE	ITEM

LIST OF MATERIALS / PARTS LIST

REF ONLY-NOT TO BE MAINTAINED

DASH NO.	NEXT ASSY.	USED ON

APPLICATION

DRAWN L. GRAY DATE 6-26-9
CHKD J. TSENG 1-31-9
APPD
APPD
APPD
APPD
APPD
APPD

CONTRACT NO. DE-AC02-89ER40486

SSC

PROPOSED
SDC SUPPORT
(SIDE VIEW - HALF)

SIZE C | CAGECO | DRAWING NO R20000282 | REV

SCALE | WEIGHT | WBS | SHEET OF

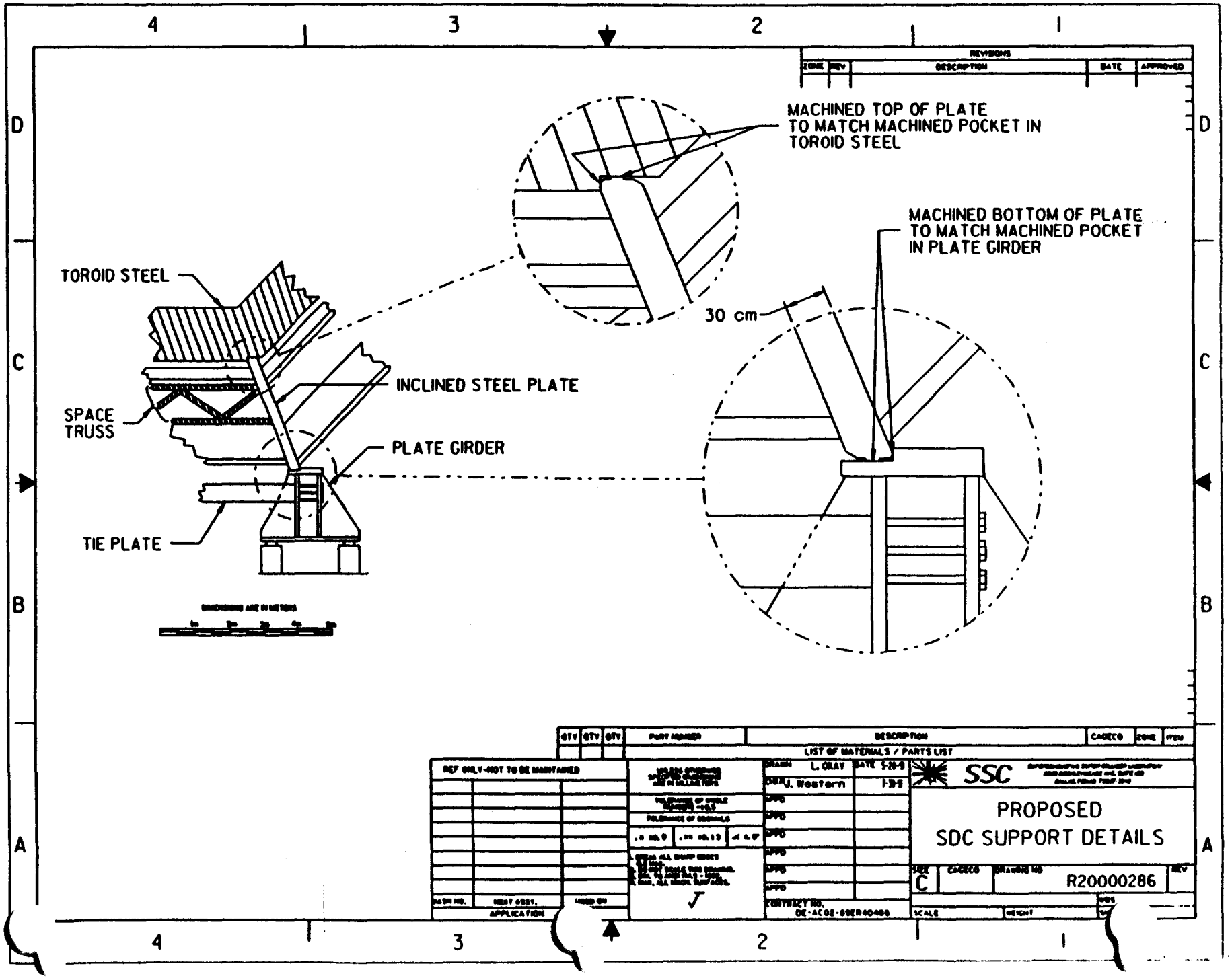
MACHINED TOP OF PLATE
TO MATCH MACHINED POCKET IN
TOROID STEEL
MACHINED BOTTOM OF PLATE
TO MATCH MACHINED POCKET
IN PLATE GIRDER
30 cm
TOROID STEEL
INCLINED STEEL PLATE
SPACE
TRUSS
PLATE GIRDER
TIE PLATE
LIST OF MATERIALS / PARTS LIST
SSC
PROPOSED
SDC SUPPORT DETAILS
R20000286

Appendix C - Draft MBT Coil Concept

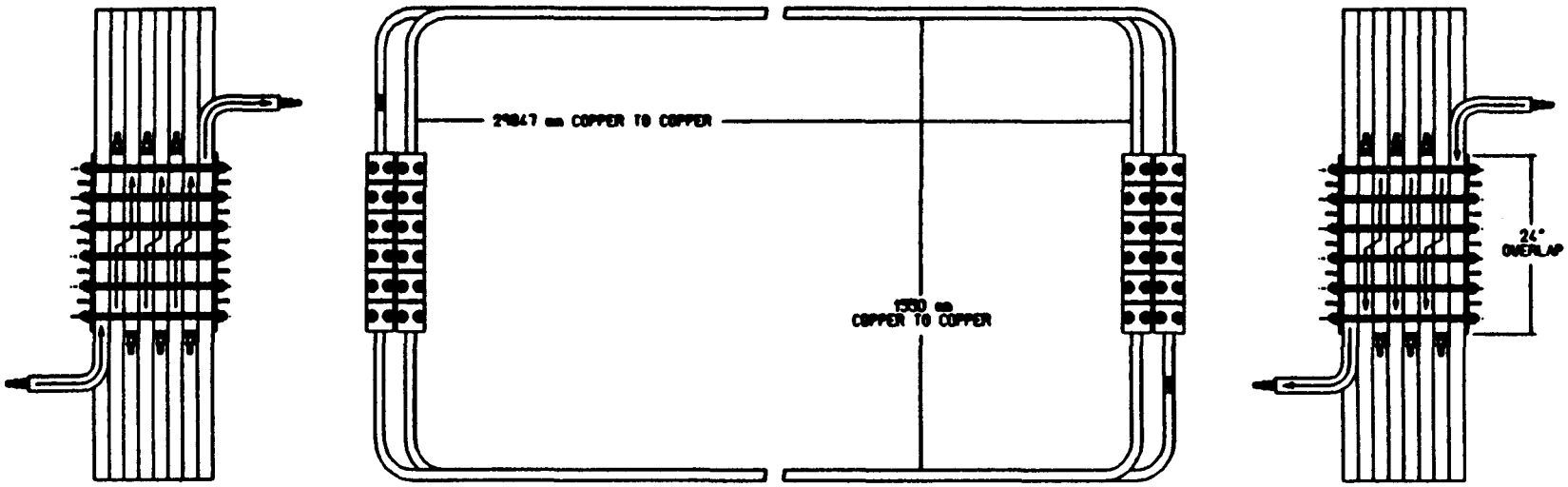

1/5 SCALE PLAN, ELEVATION, & END VIEWS

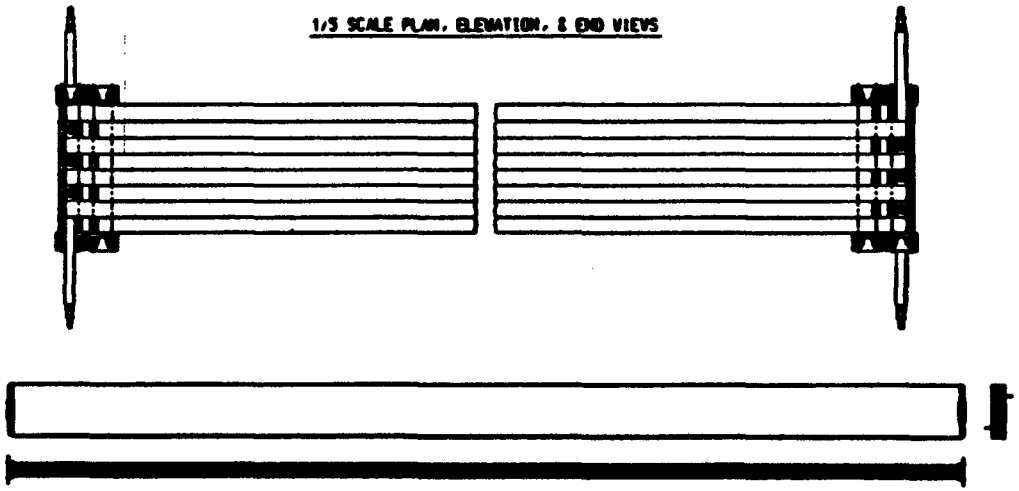

1/40 SCALE PLAN, ELEVATION, & END VIEWS

UNIV. OF WISCONSIN
PHYSICAL SCIENCES LAB
(608) 873-4651
9-14-90 SCALE IS NOTED

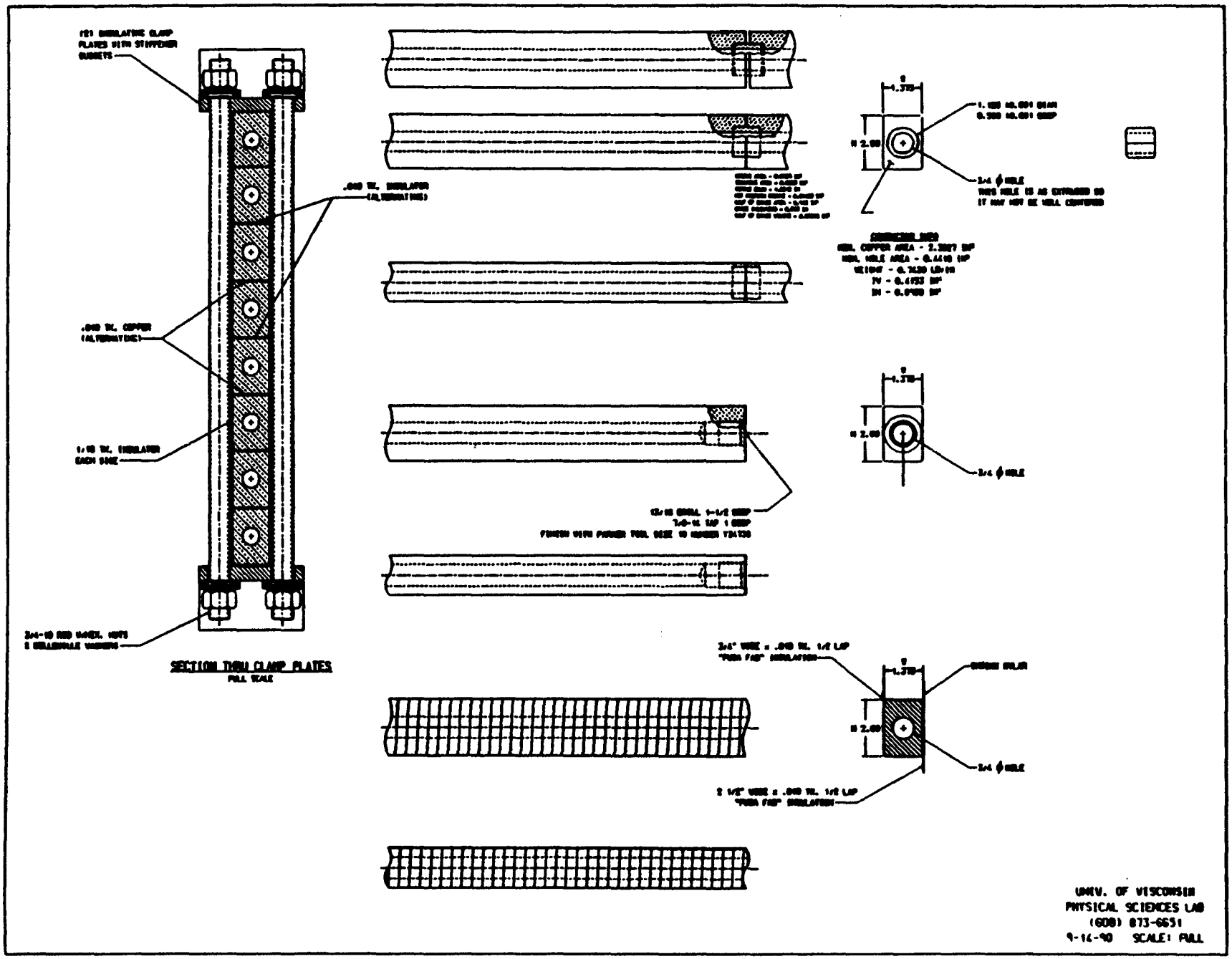

PRODUCED BY J.C DRAWING FILENAME CDRLFIX
ON 08/01/91 AT 16:33 PLOTTED AT SCALE 1/1

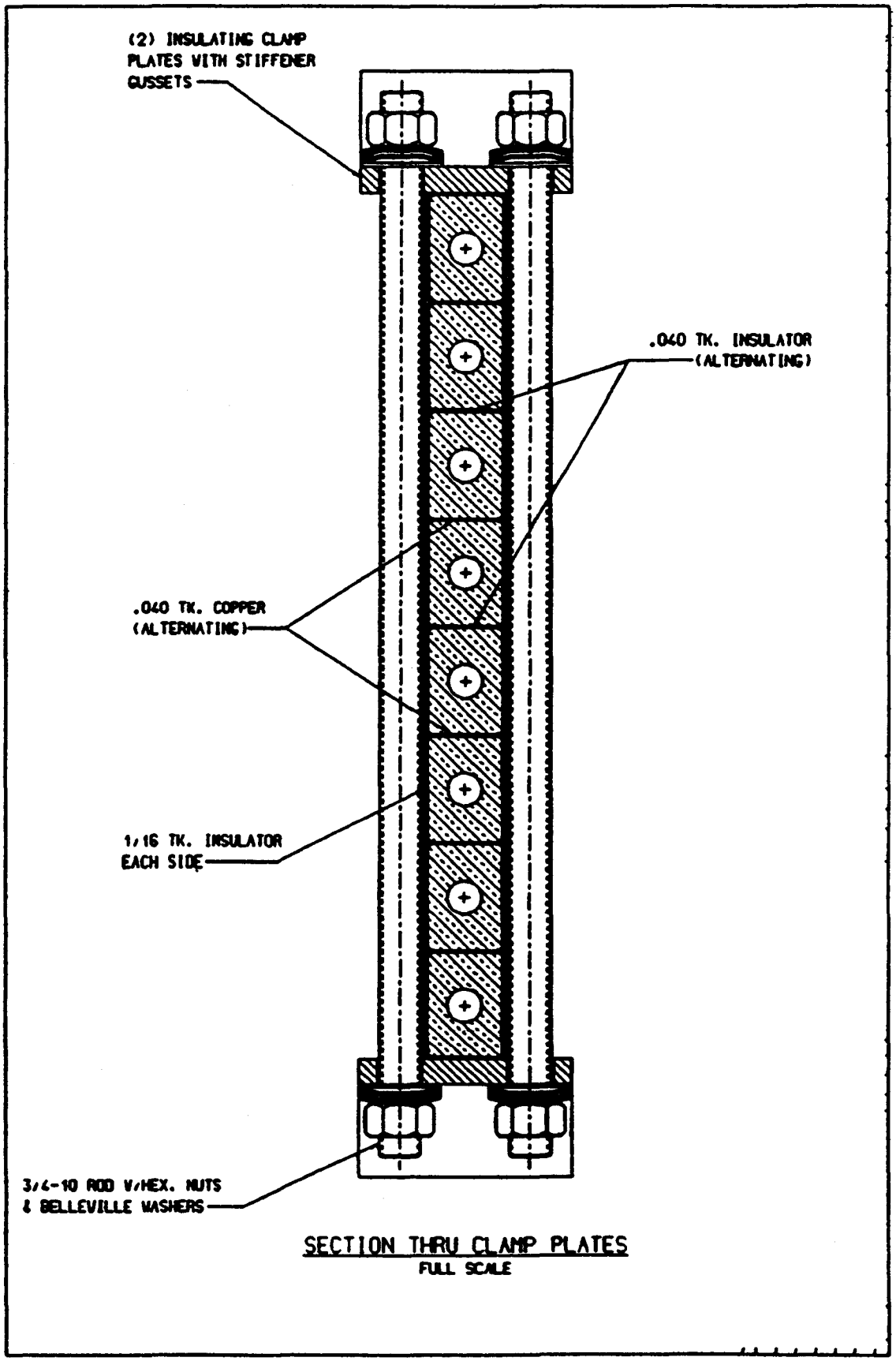

SECTION THRU CLAMP PLATES
FULL SCALE

PRODUCED BY JJC
ON 08/01/91 AT 16:37

DRAWING FILENAME COILFIX
PLOTTED AT SCALE 1/1

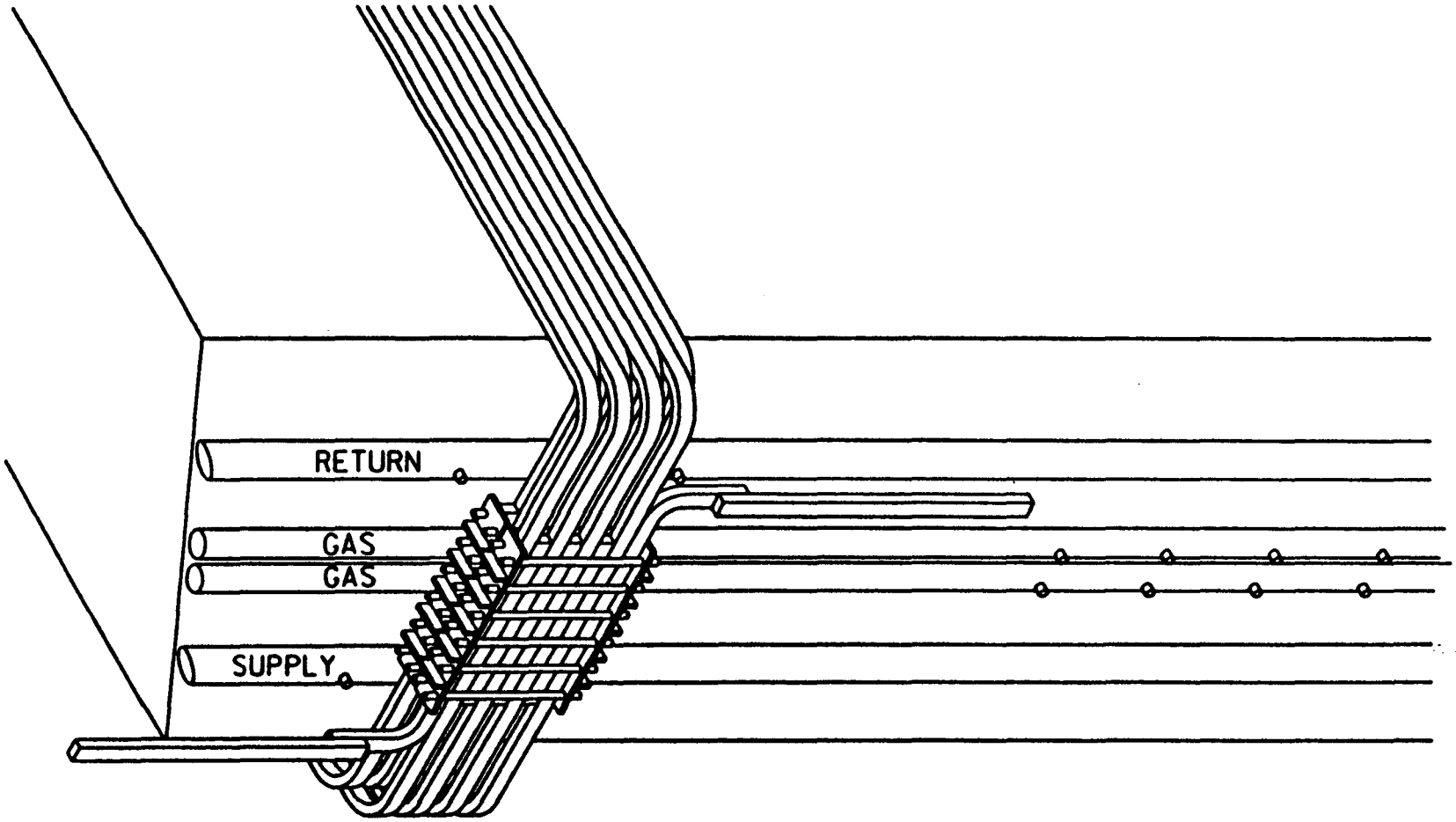
RETURN
GAS
GAS
SUPPLY

Appendix D - A-87 Material Properties

Manufacturing:

Izhorsky Zavod proposes to use an alloy designated as A-87. The composition of this alloy is:

C ≤ .13; Mn .3-.6; Si .12-.35; P ≤ .025; S ≤ .025; Cr ≤ .4; Ni ≤ .5; Cu ≤ .4.

In order to provide reasonable magnetic properties we may need to specify an alloy different from this. We did not discuss different alloys with Izhorsky Zavod.

Rolling:

	Rolling	Machining	Transportation
Length (mm)	15,000	12,000	12,000
Width (mm)	5,000	5,000	5,000
Thickness (mm)	500	2,000	3,000
Weight (tonnes)	90	220	220

The plate mill can handle pieces up to 90 tonnes for an initial weight. Since the initial piece must be about 1.8 times the final weight, the maximum final weight is about 50 tonnes. With special handling to reduce waste, slightly heavier plates may be possible. The maximum initial thickness is 1100 mm. The maximum final dimensions are 500 mm for thickness, 5 m for width and 15 m for length (subject to weight limit mentioned earlier). The mill provides a rolling force of 9000 tons and a torque of 3600 Nm. In between passes the plate is rotated to keep it rectangular. Plates can also be flipped over. Defects between .5 and 5 mm are removed with flame cleaning. High pressure (150 MPa) water jets are used to remove scale. On a final production plate 300 mm thick the scale remaining would be about .5 mm on each side. Shears and gas plasma cutting are used to shape the final plate. The current equipment allows cutting plates up to 150 mm thick. To increase the capacity to 450 mm thick would require some modernization. Post rolling heat treatment is used to anneal the plates. Plates up to about 150 mm thick can be straightened by "bending"; thicker plates can only be improved through machining. The use of plates of thickness above 100 mm may require machining in order to meet flatness requirements. Each of the options must be evaluated to determine the extent of machining required.

The following table shows some flatness values as a function of thickness. The definition of various symbols is shown in the figure.

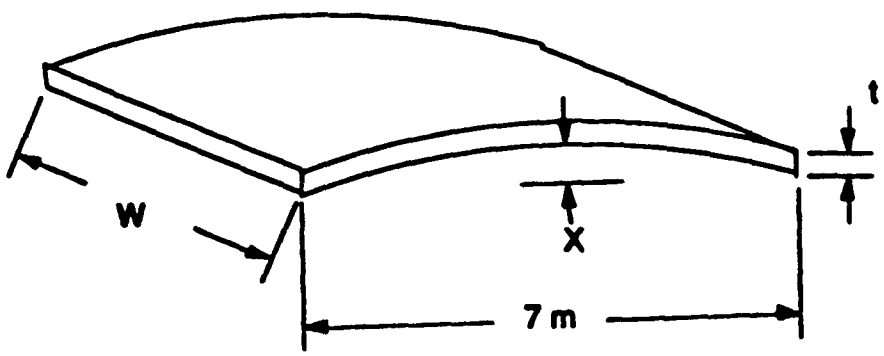

Tolerance	t Thickness	w Width	X max Flatness	X expect Flatness	Improvement Method
±1 mm	70 mm	2.2 m	5 mm	2 mm	flatten when welding
±1 mm	100 mm	2.2 m	5 mm	2 mm	flatten when welding
±2 mm	150 mm	1.5 m		2 mm	no treatment
±1 mm	150 mm	1.5 m		2 mm	abrasive blasting
+2-3 mm	200 mm	2.2 m	10 mm	5 mm	machine needed
±3 mm	300 mm	2.2 m	12 mm	7 mm	machine needed

Magnetic Tests of A-87 Steel by Westinghouse Electric - Test #12838, Sample #2

H (Oe)	B (gauss)	B (T)	Permeability
50	15590	1.559	311.8
100	17180	1.718	171.8
200	18710	1.871	93.55
300	19740	1.974	65.8
400	20370	2.037	50.925

Magnetic Tests of A-87 Steel by Westinghouse Electric - Test #12838, Sample #3

H (Oe)	B (gauss)	B (T)	Permeability
50	15790	1.579	315.8
100	17630	1.763	176.3
200	19260	1.926	96.3
300	20340	2.034	67.8
400	20970	2.097	52.425

Magnetic Tests of A-87 Steel by Westinghouse Electric - Test #12838, Sample #31457

H (Oe)	B (gauss)	B (T)	Permeability
50	16390	1.639	327.8
100	17880	1.788	178.8
200	19250	1.925	96.25
300	20280	2.028	67.6
400	20900	2.09	52.25

Magnetic Tests of A-87 Steel by Westinghouse Electric - Test #12838, Sample #38248

H (Oe)	B (gauss)	B (T)	Permeability
50	16390	1.639	327.8
100	17780	1.778	177.8
200	19250	1.925	96.25
300	20230	2.023	67.43333
400	20850	2.085	52.125

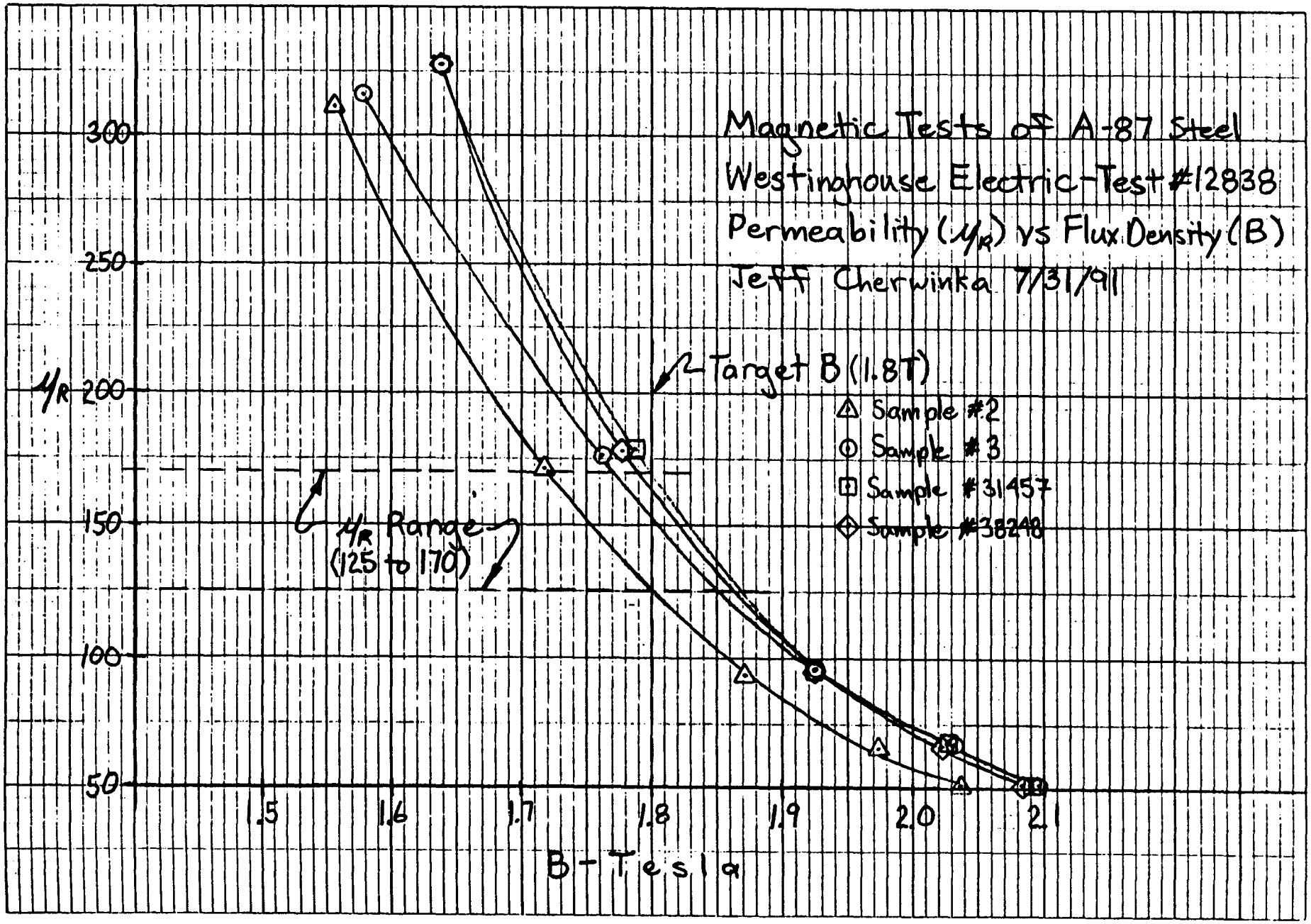
Magnetic Tests of A-87 Steel
Westinghouse Electric-Test #12838
Permeability (μ_R) vs Flux Density (B)
Jeff Cherwinka 7/31/91
Target B (1.8T)
Sample #2
Sample #3
Sample #31457
Sample #38248
μ_R Range (125 to 170)
μ_R
300
250
200
150
100
50
1.5
1.6
1.7
1.8
1.9
2.0
2.1
B - Tesla

Appendix E - Draft Conceptual MBT Cost and Schedule

WBS	Description	Materials (K $)	Manufactu Labor (K $)	Mat. + nuf. Labor (K $)	Edla (K $)	Edla (%)	Subtotal (K $)	Conting. (K $)	Contin (%)	Total (K $)
3.1.1	Barrel Toroid	28086.64	5063.79	33150.63	5957.72	15.2	39108.36	8428.50	21.5	47536.86
3.1.1.1	Magnet Iron	15818.83	3341.05	19159.88	3047.35	13.7	22207.25	4631.13	20.8	26838.38
3.1.1.1.1	Short Thick Blocks	4567.02	1044.31	5611.33	886.39	13.6	6497.72	1326.49	20.4	7824.21
3.1.1.1.2	Long Blocks	8951.69	1685.60	10637.29	1708.67	13.8	12345.96	2559.66	20.7	14905.62
3.1.1.1.3	Short Thin Blocks	67.56	8.52	76.08	11.85	13.4	87.93	18.07	20.5	106.00
3.1.1.1.4	Corner Bolts	124.32	0.00	124.32	21.87	14.9	146.19	20.47	14.0	166.66
3.1.1.1.5	Ring Pre-Assembly	0.00	60.35	60.35	4.61	7.1	64.97	12.99	19.9	77.96
3.1.1.1.6	Fixtures/Tooling	644.00	542.27	1186.27	156.39	11.6	1342.66	349.09	26.0	1691.75
3.1.1.1.7	Transport to Port of Origin	1464.24	0.00	1464.24	257.57	14.9	1721.82	344.36	20.0	2066.18
3.1.1.2	Transportation to Site	4785.36	0.00	4785.36	841.79	14.9	5627.17	977.28	17.3	6604.45
3.1.1.2.1	Transport to Port of Entry	2847.14	0.00	2847.14	500.84	14.9	3347.98	669.60	20.0	4017.58
3.1.1.2.2	Storage	80.64	0.00	80.64	14.19	14.9	94.83	23.71	25.0	118.54
3.1.1.2.3	Rail to SSCL	1464.24	0.00	1464.24	257.57	14.9	1721.82	223.84	13.0	1945.66
3.1.1.2.4	Heavy Hauling to Hall Shaft	393.34	0.00	393.34	69.19	14.9	462.54	60.13	13.0	522.67
3.1.1.3	Z-Connectors	71.68	0.00	71.68	9.42	11.6	81.09	11.35	14.0	92.44
3.1.1.3.1	Block Bolts	18.14	0.00	18.14	0.00	.0	18.14	2.54	14.0	20.68
3.1.1.3.2	Cables	53.54	0.00	53.54	9.42	14.9	62.95	8.81	14.0	71.76
3.1.1.4	Coils	3730.43	0.00	3730.43	1032.77	21.6	4763.20	1619.49	34.0	6382.69
3.1.1.4.1	Insulated Copper Coils	0.00	0.00	0.00	0.00	.0	0.00	0.00	.0	0.00
3.1.1.4.2	Supports	0.00	0.00	0.00	0.00	.0	0.00	0.00	.0	0.00
3.1.1.4.3	Interconnects	0.00	0.00	0.00	0.00	.0	0.00	0.00	.0	0.00
3.1.1.5	Magnet Barrel Support System	3680.54	1722.74	5403.28	1026.39	15.9	6429.65	1189.25	18.5	7618.90
3.1.1.5.1	Inclined Plates	426.91	99.02	525.93	123.91	19.0	649.83	90.98	14.0	740.81
3.1.1.5.2	Truss & Bracing	34.40	85.19	119.59	71.82	37.5	191.41	26.80	14.0	218.21
3.1.1.5.3	Girders	451.32	231.93	683.25	160.67	19.0	843.92	118.15	14.0	962.07
3.1.1.5.4	Floor Plates	69.91	17.40	87.31	4.81	5.2	92.13	12.90	14.0	105.03
3.1.1.5.5	Pre-Assembly	0.00	160.64	160.64	44.42	21.6	205.06	28.71	14.0	233.77
3.1.1.5.6	Cables	192.00	66.94	258.94	31.87	10.9	290.81	58.16	20.0	348.97
3.1.1.5.7	500 MT Horizontal Jacks	768.00	267.76	1035.76	175.76	14.5	1211.52	242.30	20.0	1453.82
3.1.1.5.8	900 MT Vertical Jacks	1280.00	446.26	1726.26	260.76	13.1	1987.02	397.40	20.0	2384.42

WBS	Description	Materials (K $)	Manufacture Labor (K $)	Mat. + Manuf. Labor (K $)	Edla (K $)	Edla (%)	Subtotal (K $)	Conting. (K $)	Conting. (%)	Total (K $)
3.1.1.5.9	Load Cells	128.00	44.63	172.63	21.25	10.9	193.88	38.78	20.0	232.66
3.1.1.5.10	Hydraulic Control System	70.00	41.84	111.84	24.75	18.1	136.58	32.78	24.0	169.36
3.1.1.5.11	Alignment System	180.00	167.35	347.35	60.38	14.8	407.73	97.86	24.0	505.59
3.1.1.5.12	Electrical/Mechanical System	70.00	41.84	111.84	24.75	18.1	136.58	32.78	24.0	169.36
3.1.1.5.13	Lifting and Placement Fixtures	10.00	51.94	61.94	21.24	25.5	83.18	11.65	14.0	94.83

SDC - Muon Toroid Milestones

- Approved Conceptual Design ... October 1991
- Technical Review ... March 1992
- Technical Proposal Complete (Preliminary Design) ... April 1992
- Detail Design Complete ... April 1993
- First Steel Piece Made ... January 1994
- Last Steel Piece Made ... September 1995
- Begin Installation ... March 1996
- Installation Complete ... November 1996

Big Block Muon Steel Option

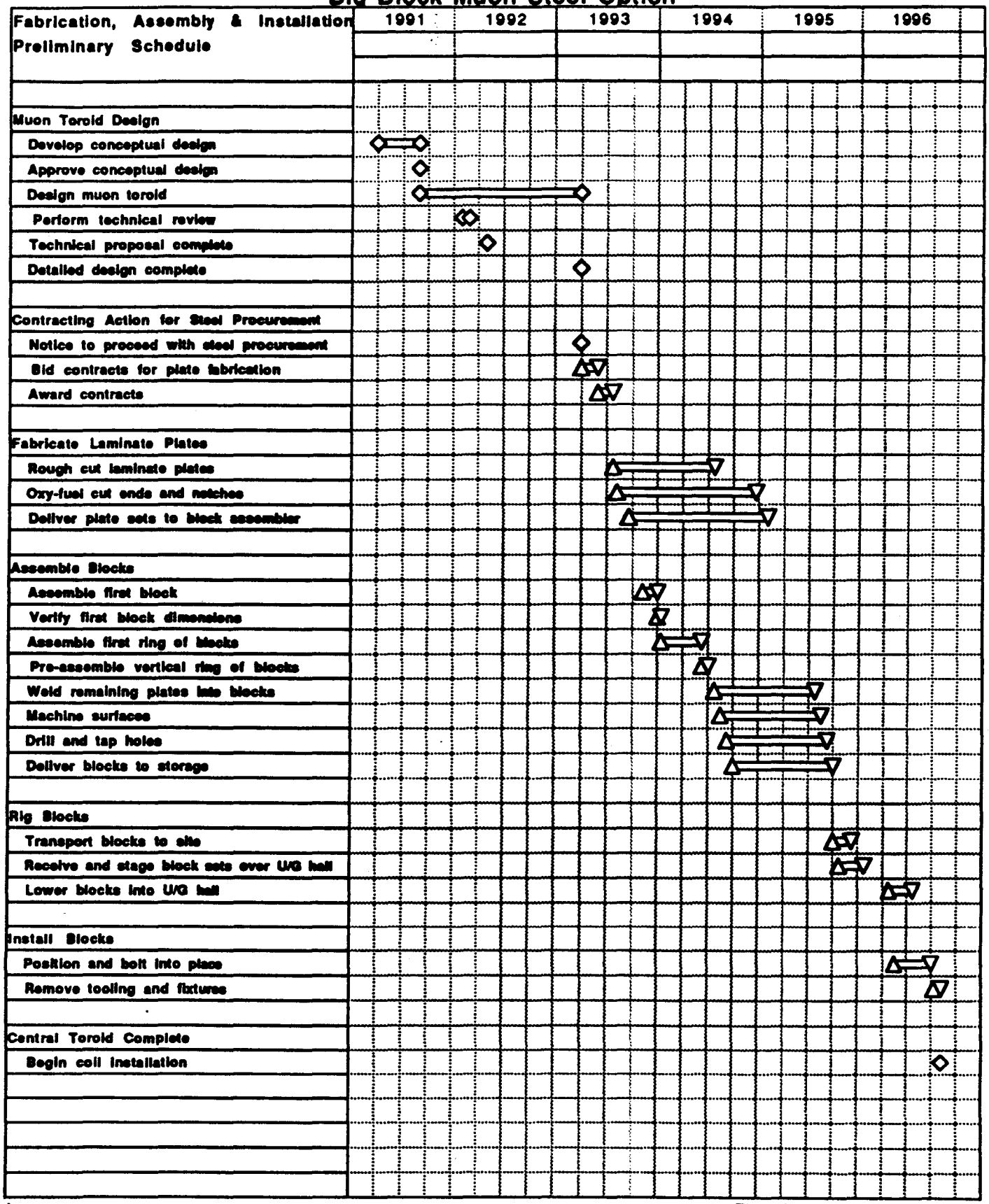

jng

Thursday, September 19, 1991

Typical
SDC Muon Steel Fabrication, Assembly and Installation for the Big Block Steel Option

PRELIMINARY DRAFT

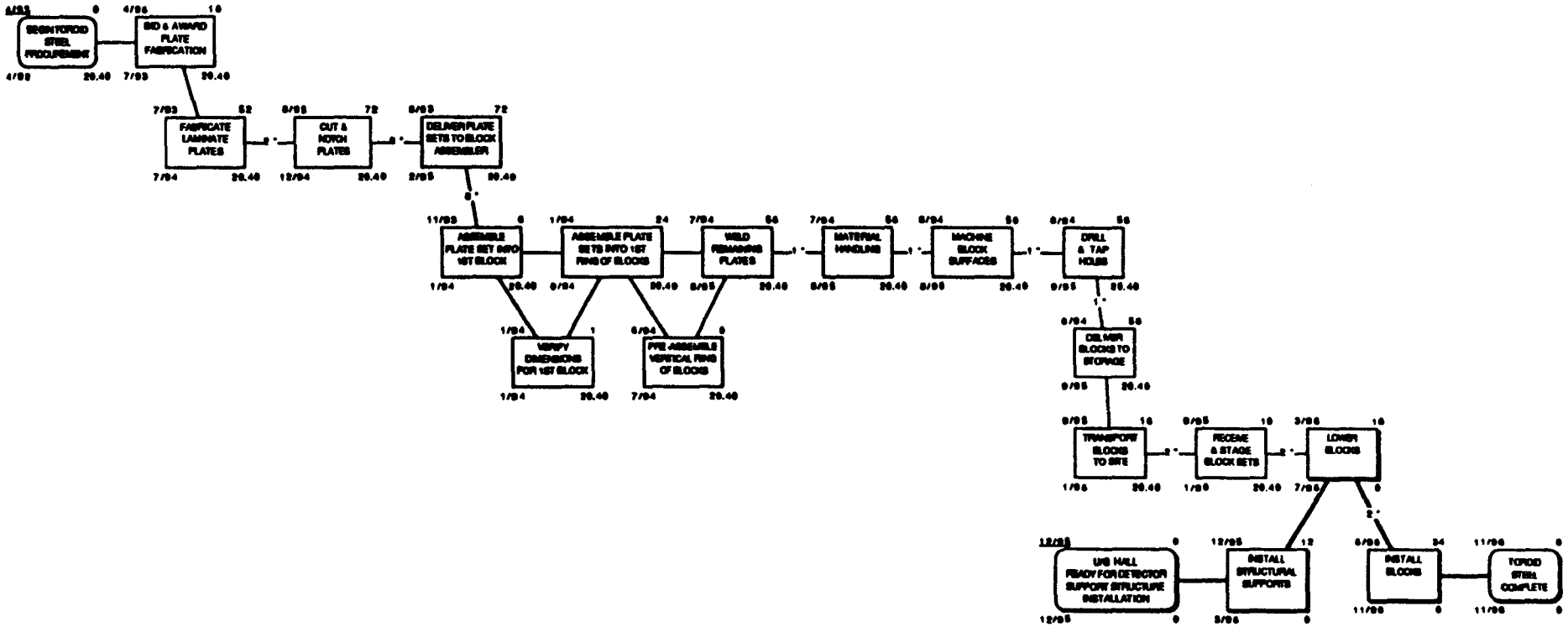

Assumptions:

1. one-shift cutting and machining operations
2. three-shift welding operations
3. two-shift drilling and material handling operations
4. multiple shift loading may not be reflected in cost estimate
5. 2 welding stations
6. 2 drilling stations
7. 1 cutting and machining station
8. rigging and assembly crews of 4
9. asterisk on connecting lines indicates start-to-start lag time of "n"

Appendix F - MBT Specifications

Barrel Steel Definitions and Specification Proposal (Version 2.6 6/16/91):

1) Definition of 1.8 Tesla field: Integral B (cross) dl = 1.5 meters * 1.8 Tesla as measured along a muon trajectory from the IP through the midpoint of any face of the magnet. (theta = 90 degrees and phi = 0, 45, 90, 135,1 80, 225, 270, 315, and 360 degrees)

2) The dimensions of the toroid steel will be specified by the integration group. The current values from the Muon System Proposal (April 19, 1991) are: inner flat-to-flat = SI (mm), outer flat-to-flat = SO (mm), steel thickness = T (mm), length = L (mm), mass = M (Kgm), weight.= W (short tons).

parameter	Scint. Cal.
SI	14,480
SO	17,480
T	1,500
L	29,600
M	18,450,000
W	20,340

3) No part of the actual toroid steel will extend outside an envelope centered on the nominal IP and toroid axis with inner IP-to-flat "(SI/2) - 15 mm", outer IP-to-flat "(SO/2) + 15 mm", and length IP-to-end "(L/2) + 15 mm".

a) Length change for the barrel toroid from a 10 degree Centigrade temperature rise is approximately 4 mm.

b) This specification includes static deformations of the barrel toroid.

c) This specification includes the motion when the magnet is energized.

4) The floor of the hall is parallel to sea level and the beam crosses the hall at a slight vertical angle (~1 mrad at Interaction Region 1) The axis of the toroid will be along the beam line and the rails in the detector hall will be parallel to the floor. The rails in the toroid will be parallel to the axis of the toroid. Any adjustments necessary to keep calorimeters and tracking chambers on beam line will be in the supports of the calorimeters.

5) Ray tracing: Any ray from the Interaction Point through the steel must experience 98% of the nominal steel dimension along that path. No gap may be greater than 3 mm.

a) The concern here is the background spray from the calorimeter and the field integral near eta = 0. This may be revised on the basis of studies of (i) trigger rates, (ii) backgrounds,, and (iii) chamber occupancy by the muon group.

6) Permeability: The permeability must be equal to or greater than 138 at 1.8 Tesla.

7) Any laminates of the steel must be parallel to the flux lines.

8) Floor motion: After removal and reinstallation of the intermediate toroids and the central calorimeter the toroid should return to its previous position to within 3 mm everywhere. This includes mechanical alignment, inelastic and elastic deformations. The maximum settling of any part of the floor under the toroid over a 10 year period will be 50 mm down and 25 mm up. Adjustments on the base of the toroid will accommodate this floor motion. Periodic adjustment of the base structure of the toroid to bring it within 3 mm of nominal should be made.

a) Adjustment to maintain muon chamber alignment will be made via the chamber mounts.

b) The proper specification for floor motion is quite uncertain and will have an impact on hall costs. Final specification will depend on the final Interaction Region chosen and geological studies which will not be completed for at least a year. The necessary information may not be known until the hall is actually excavated.

9) Movement of the magnet when the field is turned on will be less that 1.5 mm for any point on the magnet.

a) Estimate of the change of radius due to magnetic hoop stress is about 100 microns. How the change of stress at the joints changes the barrel toroid shape is to be determined.

10) Pre-assembly of every vertical section (the exact definition of this is dependent on the assembly method chosen) at the manufacturing site. Bolting, not welding, will be the assembly method in the hall for major pieces of the toroid.

a) The pre-assembly requirement could be replaced by a complete assembly of one vertical section and a check of every piece to a templet. In addition to the verifying that everything fits properly we want to verify that the material behavior calculations are correct.

b) The concerns with substantial welding in the hall are: (i) How are the welds verified in situ. (ii) Will we have an EMI problem with other things that are going on in the hall, in particular calorimeter testing? (iii) If welds fail they will be hard to repair. (iv) How will we handle the dust and smoke that are created in hall?

11) The field will be calculated by measuring the permeability of individual pieces as manufactured and then the final field will be calculated from this data. Verification will be done by having nonmagnetic plates with probe holes in the toroid at several locations.

a) Included in the magnet design will be a suggested method for determination of the magnetic field.

b) The tolerance on field measurement accuracy is tentatively set at 3%. The issue is what level of systematic errors are allowed.

c) The tolerance place to place variations are tentatively set at 3%. The issue is variation of trigger efficiency.

12) This item will become the number and location of alignment holes to be specified by the muon group. Other penetration must be specified by the solenoid coil builders and calorimetry groups. The intention is that this item will become be a list of all of the magnet penetrations.

13) This item will be a description of the support locations and loads for the:

a) Muon chambers and muon trigger scintillators.

b) Intermeidate Toroids.

c) Calorimeters.

d) Magnetic loads from the solenoid that are not negligible.

14) The design of the barrel and intermediate toroid will include a suggestion for how the muon chambers are installed and mounted.

15) This item will be a description of the structural support.

a) Design of the supports will be done in consultation with the A&E firm

and lab geologist and be within the constraints established by the integration group.

16) Coil Specification. This item will become description of the coils and coil placement. Included is the location of the coils on the magnet, mounting arrangement, and stay clear regions.

17) It is not intended that the muon toroid will have to be disassembled in the hall and no specific provisions will be made for that eventuality.

18) The toroid will behave as a single mechanical unit under the influence of floor motion or other perturbations. There will be no discontinuous motion of separate parts of the toroid.

Appendix G - MBT Parts and Operations List

SDC Muon Barrel Toroid Conceptual Design Parts List

```
1   Complete Toroid
        148  Long Blocks
                298  Long Block C'Bore Plate
                     (4 of these are special for the cryogenics notch)
                     (24 of these are extra flat for the central rings)
                444  Long Block Thru Plate
                     (2 of these are special for the cryogenics notch)
                     (36 of these are extra flat for the central rings)
                1776 Long Block Bolts
                     (M56 x 725 long bolt with one nut and two washers)
                296  Pins
        72   Short Thick Blocks
                144  Short Block C'Bore Plate
                     (12 of these are extra flat for the central rings)
                288  Short Block Thru Plate
                     (24 of these are extra flat for the central rings)
                288  Short Block Notch Plate
                     (24 of these are extra flat for the central rings)
                576  Short Thick Block Bolts
                     (M56 x 1530 long bolt with one nut and two washers)
                288  Pins
        4    Short Thin Blocks
                8    Short Block C'Bore Plate
                8    Short Block Thru Plate
                4    Short Block Notch Plate
                32   Short Thin Block Bolts
                     (M56 x 725 long bolt with one nut and two washers)
                8    Pins
        432  Z Bolts
             (M56 x 390 long bolt with one nut and two washers)
        2960 Corner Bolts
             (M56 x 430 long bolt with one washer)
        1    Non-magnetic shim assembly (Alum. or S.S.)
```

SDC Muon Barrel Toroid Conceptual Design Operations List

```
Complete Toroid
        Complete Blocks
                Long Block
                        Assemble 5 plates into block
                                Oxy-fuel cut plates to shape
                                Predrill 12 block bolt holes per plate
                                    (36 thru holes and 24 thru holes
                                     with counterbores per block)
                                Rough drill 2 pin holes per plate
                                Inspect plate for flatness and thickness
                        Machine Surface A [(2096 + 2096)mm x 800mm]
                        Machine Surface B [25mm x 800mm]
                        Machine Surface C [10190mm x 1500mm]
                        Machine Surface D [7240mm x 800mm]
                        Machine Surface E [25mm x 800mm]
                        Machine Surface G [10190MM x 1500mm]
                        Machine Surface H [5997mm x 800mm]
                        Machine Surface I [2085mm x 800mm]
                        Machine Surface J [2085mm x 800mm]
                        Bore 2 pin holes [150 diameter x 800 deep]
                        Drill and counterbore 10 corner bolt holes
                        Drill and tap 10 corner bolt holes
                        Drill and tap 60 track mounting bolts (M20 x 40 deep)
                            ** not shown on drawings **
                        Drill and ream 24 track mounting pins (25 x 60 deep)
                            ** not shown on drawings **
                        Drill and tap 16 coil mounting holes (M20 x 40 deep)
                            ** not shown on drawings **
```

Machine Short Thick Block
- Assemble 10 plates into block
  - Oxy-fuel cut plates to shape
    (6 plates without notches and
    4 plates with notches per block)
  - Predrill 8 block bolt holes per plate
    (64 thru holes and 16 thru holes
    with counterbores per block)
  - Rough drill 2 pin holes per plate
  - Inspect plate for flatness and thickness
- Machine Surface A [2096mm x 1600mm]
- Machine Surface B [25mm x 1600mm]
- Machine Surface C [5998mm x 1500mm]
- Machine Surface D [5998MM x 1600mm]
- Machine Surface E [2096mm x 1600mm]
- Machine Surface F [25mm x 1600mm]
- Machine Surface G [5998mm x 1500mm]
- Machine Surface H [3069mm x 1600mm]
- Bore 2 pin holes [150 diameter x 1600 deep]
- Drill and counterbore 20 corner bolt holes
- Drill and tap 20 corner bolt holes
- Drill thru 12 Z bolt holes
- Drill and tap 40 track mounting bolts (M20 x 40 deep)
  ** not shown on drawings **
- Drill and ream 16 track mounting pins (25 x 60 deep)
  ** not shown on drawings **
- Drill and tap 32 coil mounting holes (M20 x 40 deep)
  ** not shown on drawings **

Machine Short Thin Blocks
- Assemble 5 plates into block
  - Oxy-fuel cut plates to shape
    (4 plates without notches and
    1 plates with notches per block)
  - Predrill 8 block bolt holes per plate
    (24 thru holes and 16 thru holes
    with counterbores per block)
  - Rough drill 2 pin holes per plate
  - Inspect plate for flatness and thickness
- Machine Surface A [2096mm x 1600mm]
- Machine Surface B [25mm x 1600mm]
- Machine Surface C [5998mm x 1500mm]
- Machine Surface D [5998MM x 1600mm]
- Machine Surface E [2096mm x 1600mm]
- Machine Surface F [25mm x 1600mm]
- Machine Surface G [5998mm x 1500mm]
- Machine Surface H [3069mm x 1600mm]
- Bore 2 pin holes [150 diameter x 800 deep]
- Drill and counterbore 10 corner bolt holes
- Drill and tap 10 corner bolt holes
- Drill thru 6 Z bolt holes
- Drill and tap 20 track mounting bolts (M20 x 40 deep)
  ** not shown on drawings **
- Drill and ream 8 track mounting pins (25 x 60 deep)
  ** not shown on drawings **
- Drill and tap 16 coil mounting holes (M20 x 40 deep)
  ** not shown on drawings **

Assemble blocks into rings 1600mm thick for inspection
(The first ring must be vertical but others may
be horizontal)

Other machining that is not on every block
- Plates for the central ring will need to be machined
  flat. This require machining two surfaces on
  120 plates to a flatness of +/- 0.5 mm.
  ** not shown on drawings **
- The block on the bottom (37 long blocks) will need
  have a pad machined on them for resting on the

support base. There will also be 16 - M20 x 40 deep holes per block for holding the legs in place. These blocks will also need to have a pad machined for the calorimeter track to rest on. There will be 16 - M20 x 40 deep holes per block for holding these legs in place as well.
** not shown on drawings **

There will be two special long blocks at the top that have notches to allow the cryogenic line to come through the steel. The cryogenic notch in each of the two blocks is 230mm x 910mm. This does not work out well with 160mm thick plates. In this location two 160mm x 1500mm x 10190mm plates should be replaced with two 230 mm x 1500mm x 4640mm plates and one 90mm x 1500mm x 10190mm plate. Some additional bolting may be required.
** not shown on drawings **

Transport Blocks to Texas Port from U.S.S.R
- Load blocks onto rail car at manufacturing plant
- Transport by rail to port
- Unload blocks from rail car at port and onto ship
- Transport by ship from U.S.S.R port to Texas Port

Transport Blocks to Site from Texas Port
- Unload blocks from ship at port and put into storage
- Load blocks from storage onto rail car
- Transport by rail to local rail terminal
- Store on rail cars at local terminal
- Unload block from rail car onto heavy haul truck
- Transport by truck from local rail terminal to top of hole
- Unload block from truck and lower into hall
- Store block in hall or use immediately

Rig Blocks into Position
- Pick up block in hall
- Set block on orienting fixture (block must be correct side up)
- Lift block in correct orientation
- Set block in position on assembly fixture

Install Corner Bolts
- Install corner bolts as blocks are positioned
- Retorque corner bolts after complete assembly

Install Z Bolts
- Install bottom corner bolts as blocks are installed
- Install top corner bolts after all blocks are positioned
- Retorque corner bolts after complete assembly

Appendix H - Drawings

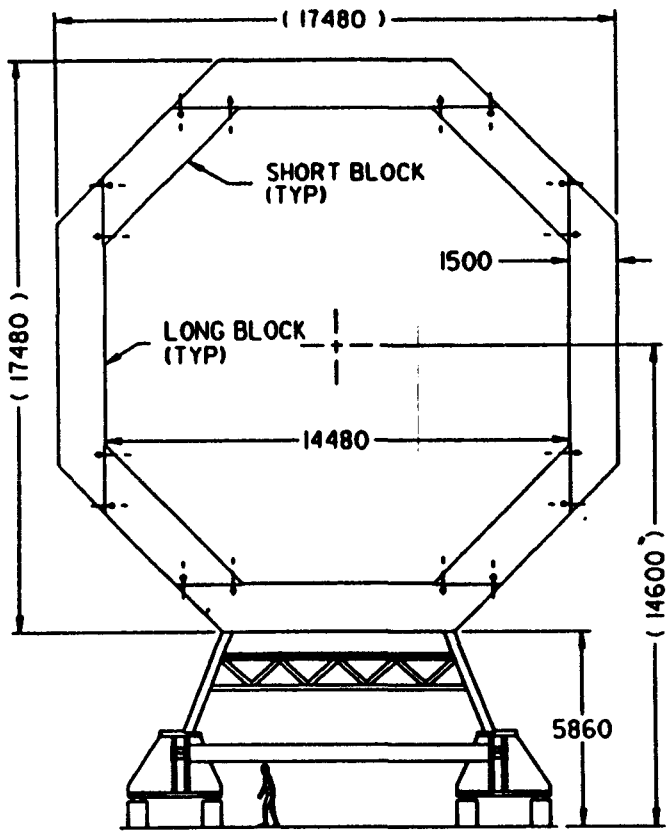

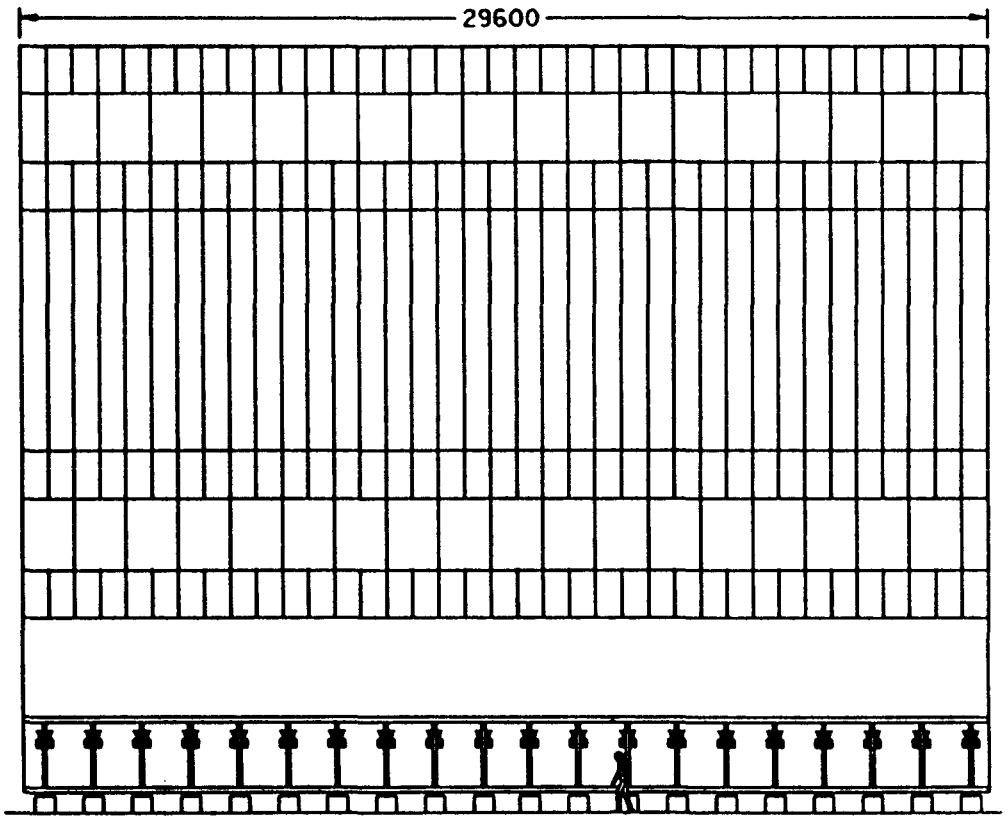

LONG/SHORT OPTION

WEIGHT: 18,450 METRIC TONS

REVISIONS

ZONE	REV	DESCRIPTION	DATE	APPROVED

QTY	QTY	QTY	PART NUMBER	DESCRIPTION	CAGECO	ZONE	ITEM

LIST OF MATERIALS / PARTS LIST

REF ONLY-NOT TO BE MAINTAINED

DASH NO.	NEXT ASSY.	USED ON
APPLICATION		

DRAWN L. Okay DATE 6-14-9

CHKD

APPD

CONTRACT NO. DE-AC02-89ER40486

SSC

SDC MBT
CONCEPTUAL DESIGN

SIZE C CAGECO DRAWING NO R20000396 REV

SCALE 1:100 WEIGHT SHEET OF

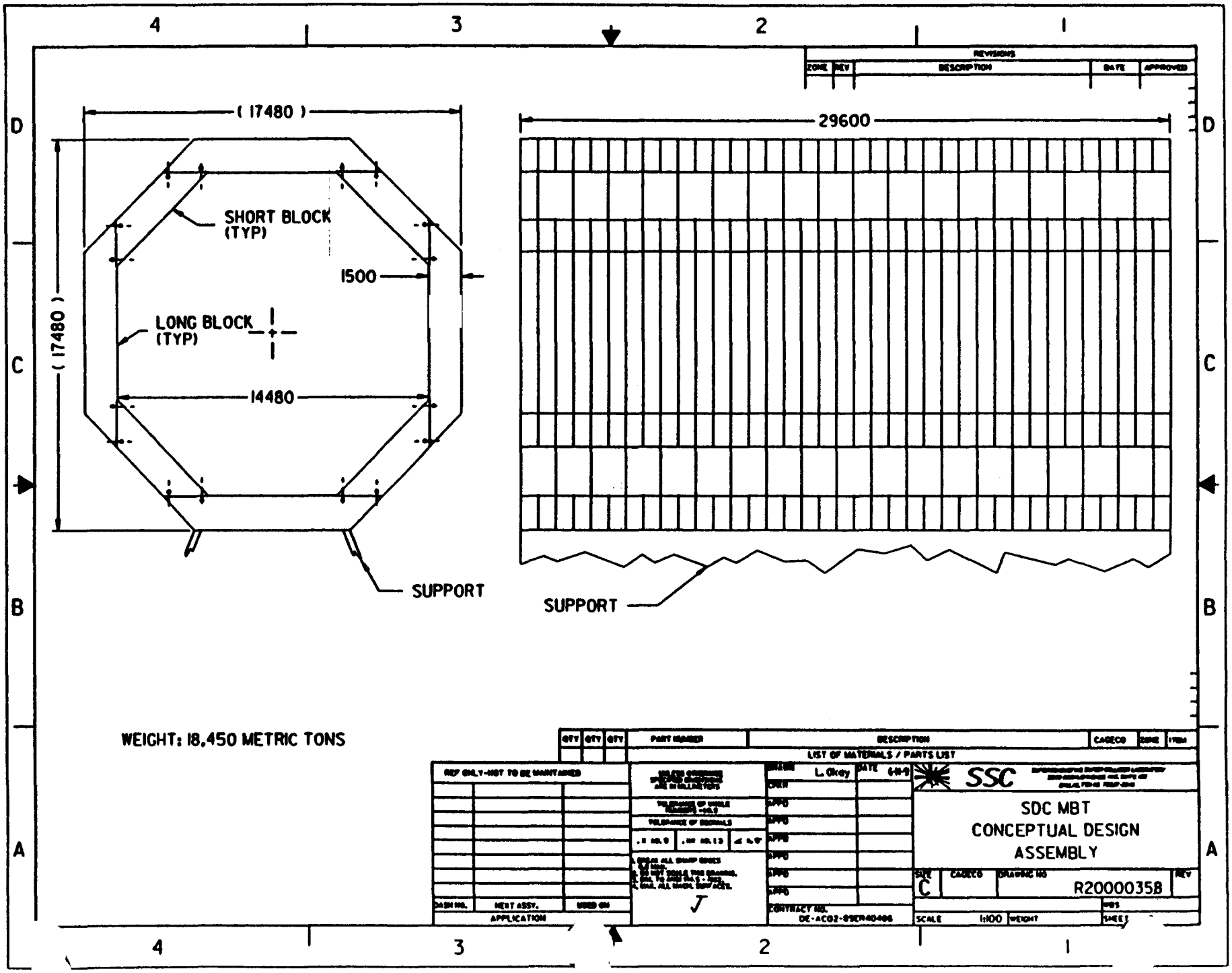
(17480)
SHORT BLOCK (TYP)
1500
LONG BLOCK (TYP)
(17480)
14480
SUPPORT
29600
SUPPORT
WEIGHT: 18,450 METRIC TONS
SSC
SDC MBT
CONCEPTUAL DESIGN
ASSEMBLY
R2000035B
L. Okay
1:100

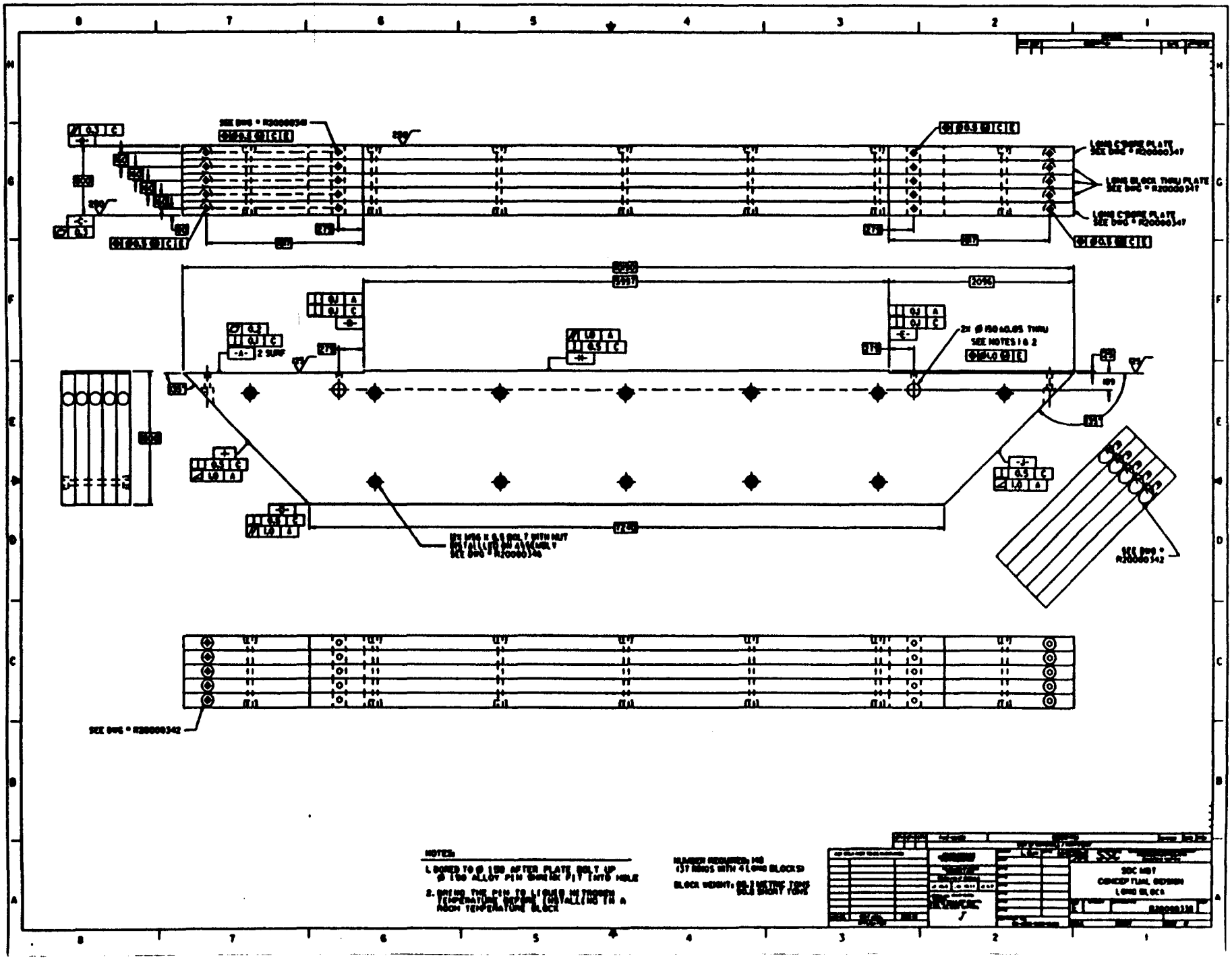
SEE DWG # R20000340
LONG COVER PLATE
SEE DWG # R20000347
LONG BLOCK THRU PLATE
SEE DWG # R20000347
LONG COVER PLATE
SEE DWG # R20000347
2X Ø .150 ±0.005 THRU
SEE NOTES 1 & 2
2 SURF
SEE DWG # R20000342
NOTES:
1. BORED TO Ø .150 AFTER PLATE BOLT UP
Ø .150 ALLOY PIN SHRINK FIT INTO HOLE
2. GRIND THE PIN TO LEVEL WITH TOPMOST
TEMPERATURE BEFORE INSTALLING IN A
HIGH TEMPERATURE BLOCK
NUMBER REQUIRED: 140
(37 RINGS WITH 4 LONG BLOCKS)
BLOCK WEIGHT:
SOLID SHOWN FORM
SDC MBT
CONCEPTUAL DESIGN
LONG BLOCK

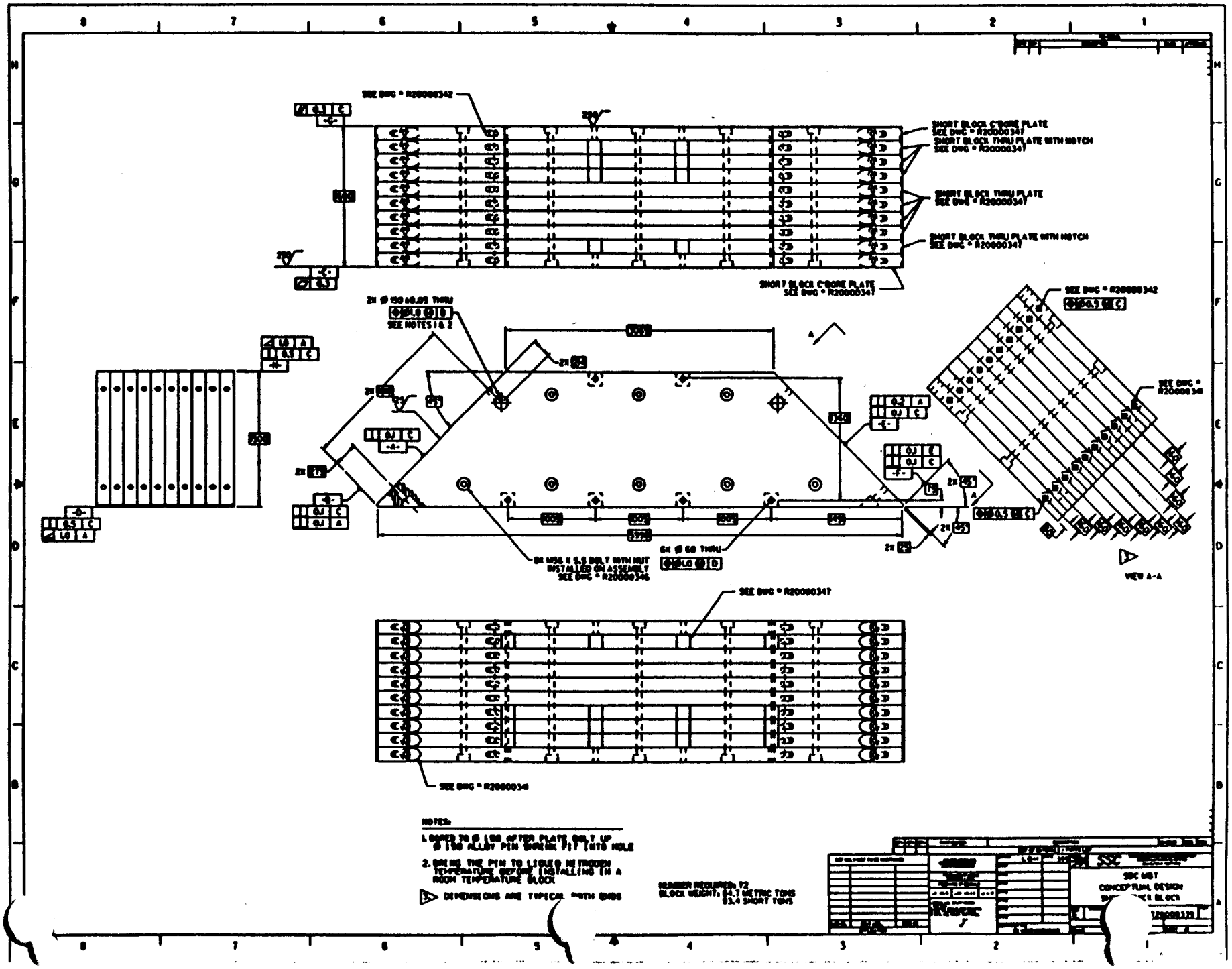
SEE DWG = R20000342
SHORT BLOCK C'BORE PLATE
SEE DWG = R20000347
SHORT BLOCK THRU PLATE WITH NOTCH
SEE DWG = R20000347
SHORT BLOCK THRU PLATE
SEE DWG = R20000347
SHORT BLOCK THRU PLATE WITH NOTCH
SEE DWG = R20000347
SHORT BLOCK C'BORE PLATE
SEE DWG = R20000347
SEE NOTES 1 & 2
SEE DWG = R20000342
SEE DWG = R20000346
VIEW A-A
SEE DWG = R20000347
SEE DWG = R20000346
NOTES:
1. BORED TO Ø 150 AFTER PLATE BOLT UP
Ø 150 ALLOY PIN SHRINK FIT INTO HOLE
2. BRING THE PIN TO LIQUID NITROGEN TEMPERATURE BEFORE INSTALLING IN A ROOM TEMPERATURE BLOCK
DIMENSIONS ARE TYPICAL FOR BOTH ENDS
NUMBER REQUIRED: 72
BLOCK WEIGHT: 84.7 METRIC TONS
93.4 SHORT TONS
SSC MDT
CONCEPTUAL DESIGN

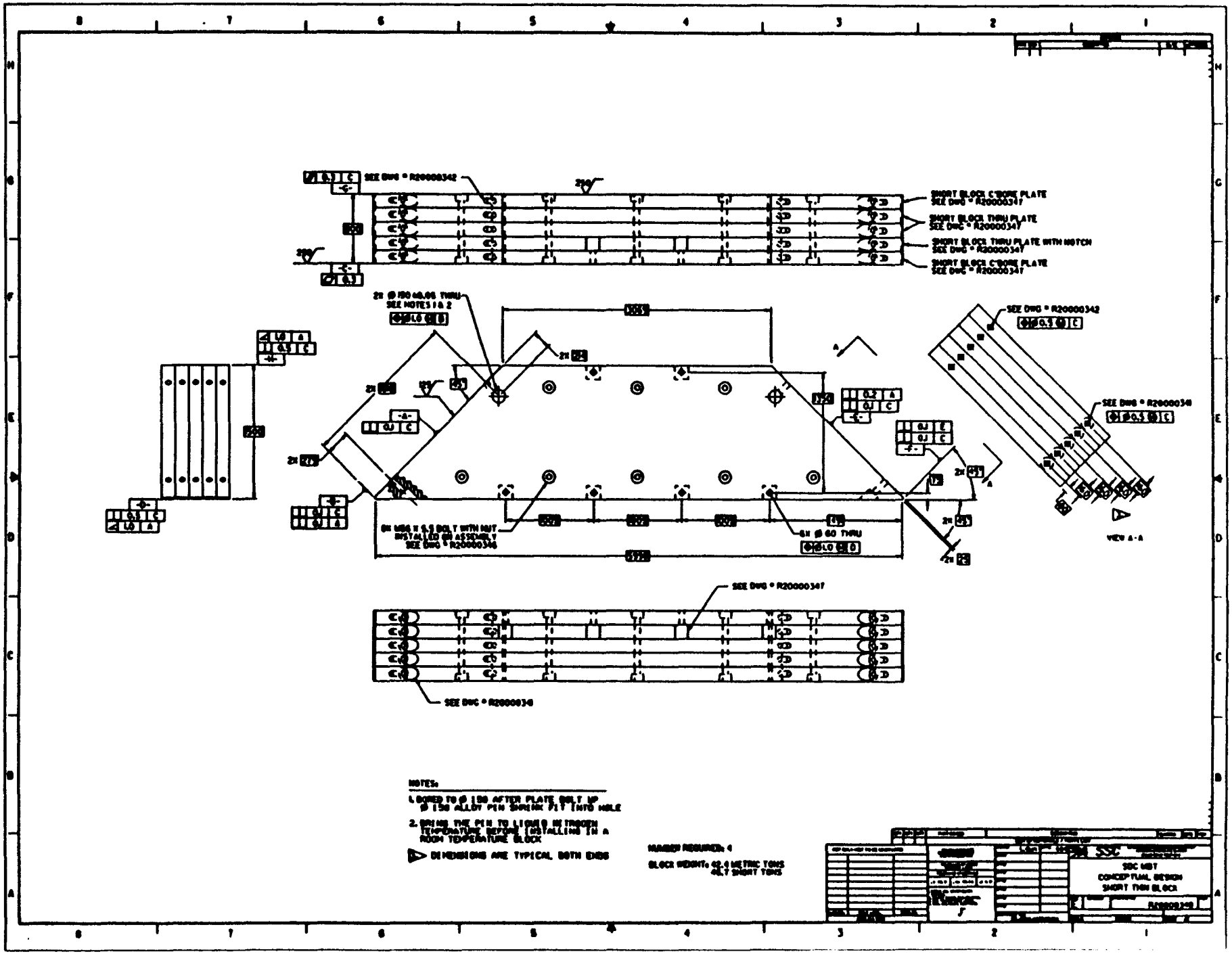
SEE DWG # R20000342
SHORT BLOCK C'BORE PLATE
SEE DWG # R20000347
SHORT BLOCK THRU PLATE
SEE DWG # R20000347
SHORT BLOCK THRU PLATE WITH NOTCH
SEE DWG # R20000347
SHORT BLOCK C'BORE PLATE
SEE DWG # R20000347
2X Ø150 ±0.05 THRU
SEE NOTES 1 & 2
SEE DWG # R20000342
SEE DWG # R20000340
VIEW A-A
SEE DWG # R20000347
SEE DWG # R20000340
NOTES:
1. BORED TO Ø 150 AFTER PLATE BOLT UP
Ø 150 ALLOY PIN SHRINK FIT INTO HOLE
2. CHILL THE PIN TO LIQUID NITROGEN
TEMPERATURE BEFORE INSTALLING IN A
ROOM TEMPERATURE BLOCK
DIMENSIONS ARE TYPICAL BOTH ENDS
HANGER REQUIRED: 4
BLOCK WEIGHT: 42.4 METRIC TONS
46.7 SHORT TONS
SDC MBT
CONCEPTUAL DESIGN
SHORT THIN BLOCK

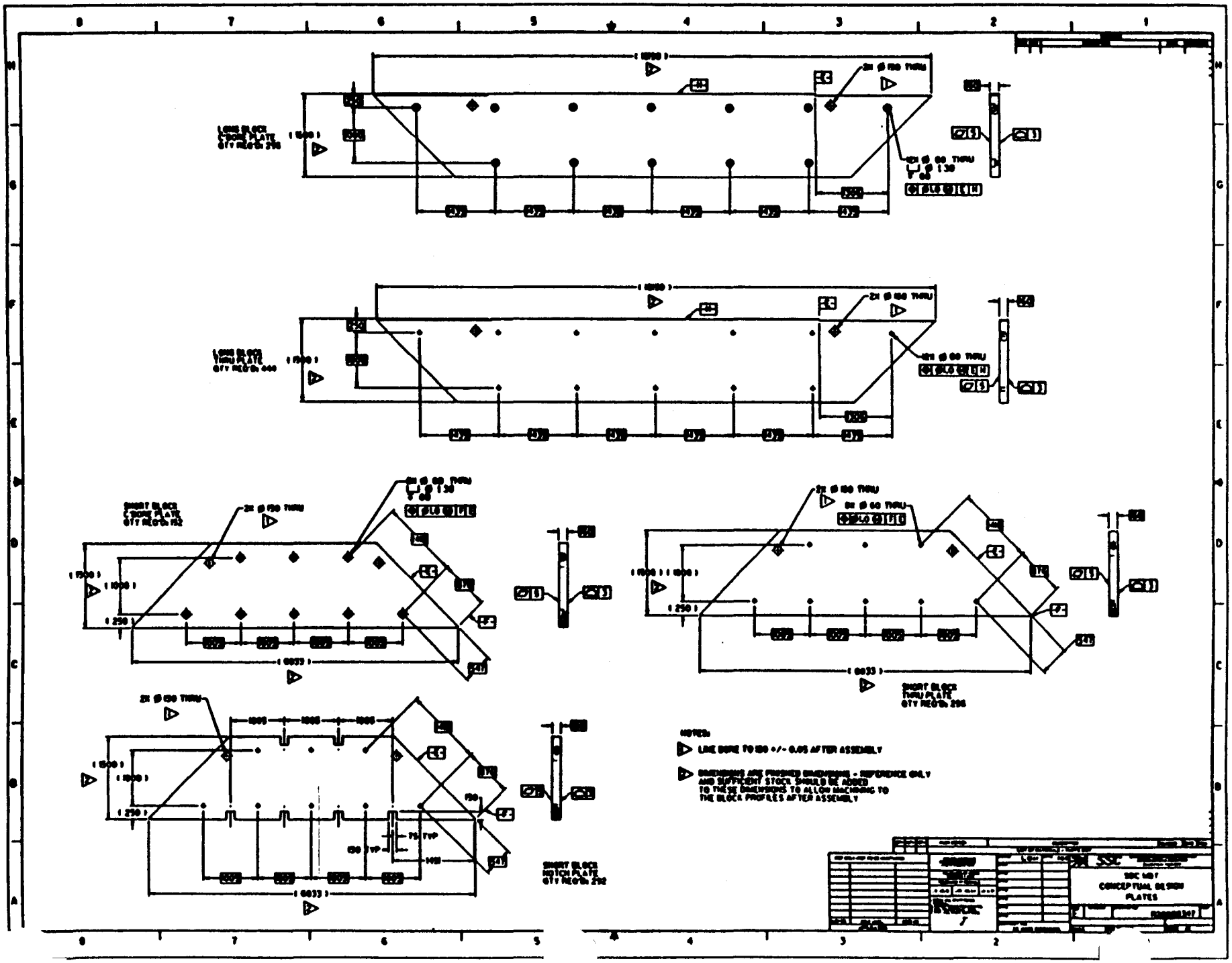
LONG BLOCK
STONE PLATE
LONG BLOCK
THRU PLATE
SHORT BLOCK
STONE PLATE
SHORT BLOCK
THRU PLATE
SHORT BLOCK
NOTCH PLATE
NOTES:
LINE BORE TO 150 +/- 0.05 AFTER ASSEMBLY
DIMENSIONS ARE FINISHED DIMENSIONS - REFERENCE ONLY
AND SUFFICIENT STOCK SHOULD BE ADDED
TO THESE DIMENSIONS TO ALLOW MACHINING TO
THE BLOCK PROFILES AFTER ASSEMBLY
SSC MBT
CONCEPTUAL DESIGN
PLATES

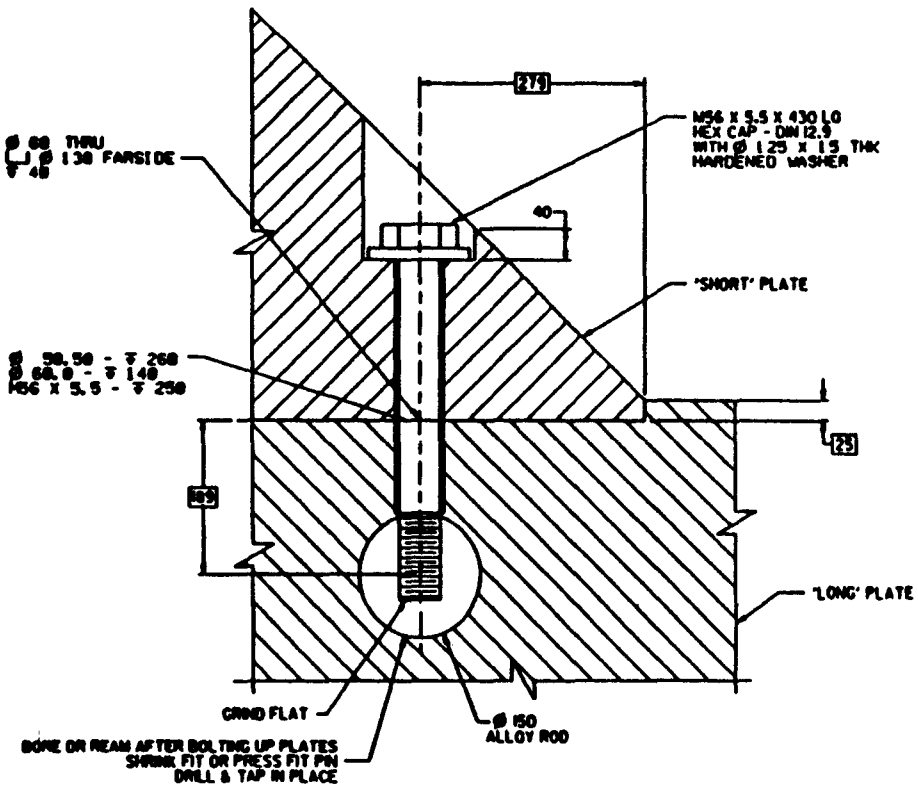

INSIDE BOLT DETAIL

REVISIONS

ZONE	REV	DESCRIPTION	DATE	APPROVED

QTY	QTY	QTY	PART NUMBER	DESCRIPTION	CAGECO	DWG	ITEM

LIST OF MATERIALS / PARTS LIST

REF ONLY-NOT TO BE MAINTAINED

DASH NO.	NEXT ASSY.	USED ON
APPLICATION		

DRAWN L. Okoy DATE 6-11-9

CHKD

APPD

CONTRACT NO. DE-AC02-89ER40486

SSC

SDC MBT
CONCEPTUAL DESIGN
INSIDE BOLT DETAIL

SIZE C CAGECO DRAWING NO. R20000341 REV

SCALE WEIGHT SHEET OF

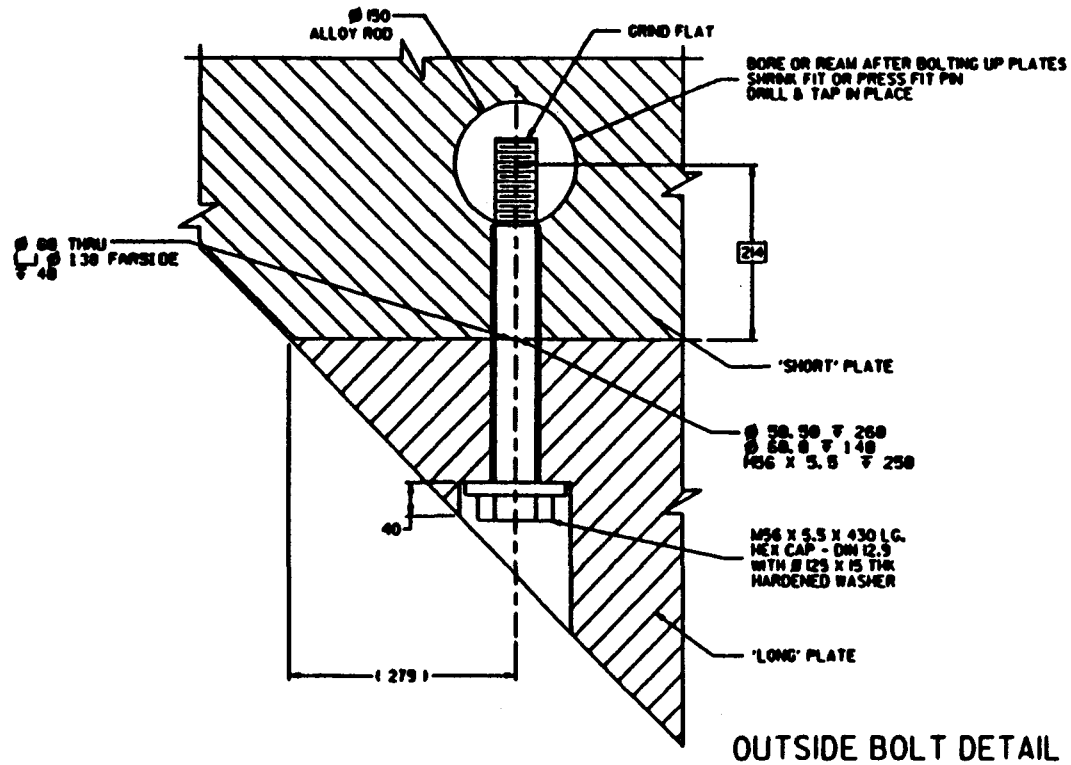

OUTSIDE BOLT DETAIL

REVISIONS				
ZONE	REV	DESCRIPTION	DATE	APPROVED

QTY	QTY	QTY	PART NUMBER	DESCRIPTION	CAGECOD	ZONE	ITEM

LIST OF MATERIALS / PARTS LIST

REF ONLY-NOT TO BE MAINTAINED

DASH NO. | NEXT ASSY. | APPLICATION

UNLESS OTHERWISE SPECIFIED ARE IN MILLIMETER

TOLERANCE OF ANGLE DIMENSIONS ±0.5°

TOLERANCE OF DECIMALS

.X ±0.0 | .XX ±0.13 | ∠ ±0.5°

REMOVE ALL SHARP EDGES OF PARTS.

J

DRAWN L. GRAY DATE 6-8-9

CHKD

APPD

APPD

APPD

APPD

APPD

APPD

CONTRACT NO. DE-AC02-09ER40486

SSC

SDC MBT
CONCEPTUAL DESIGN
OUTSIDE BOLT DETAIL

SIZE C | CAGECD | DRAWING NO R20000342 | REV

SCALE | WEIGHT

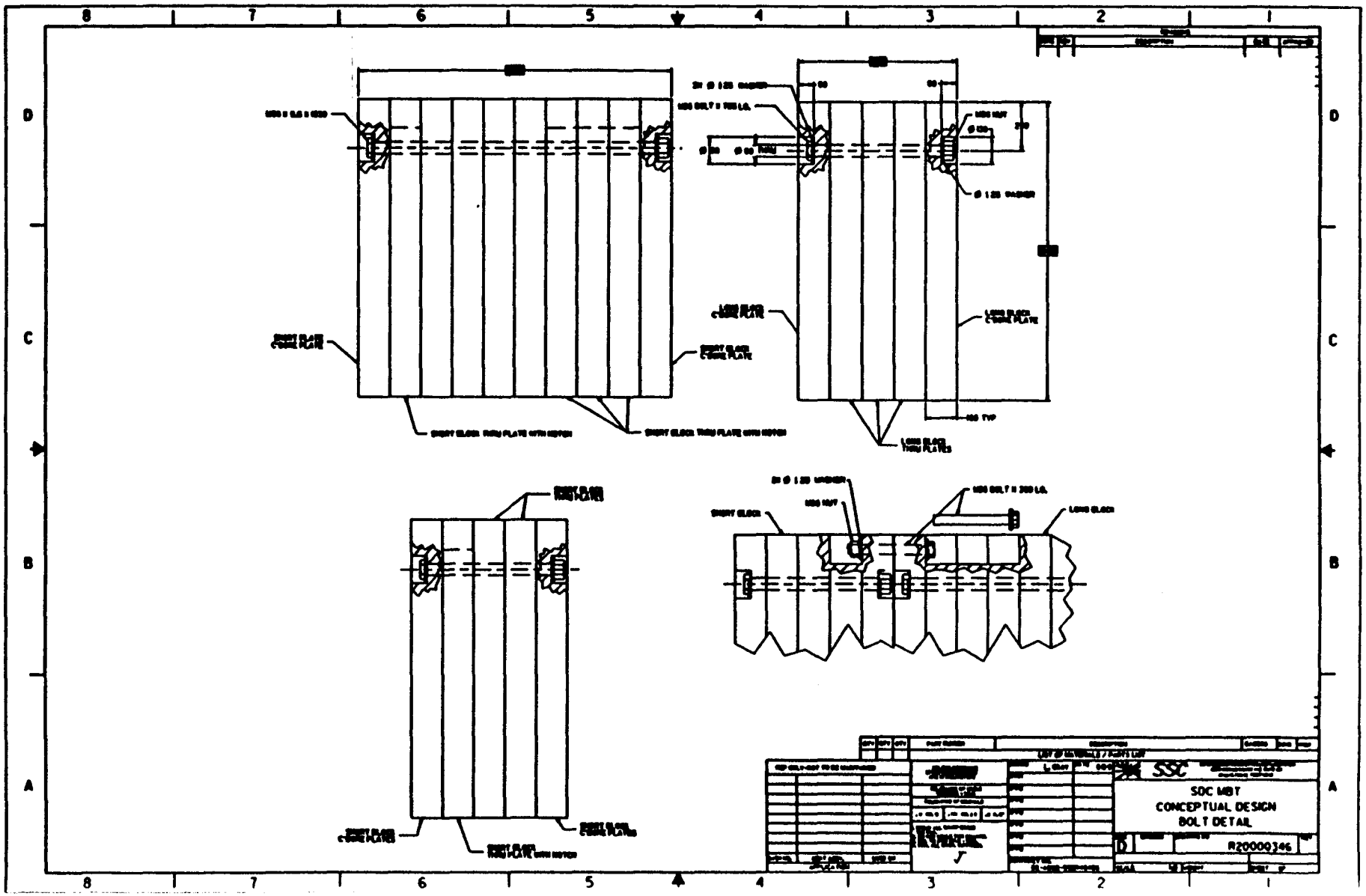
SDC MBT
CONCEPTUAL DESIGN
BOLT DETAIL
R20000346

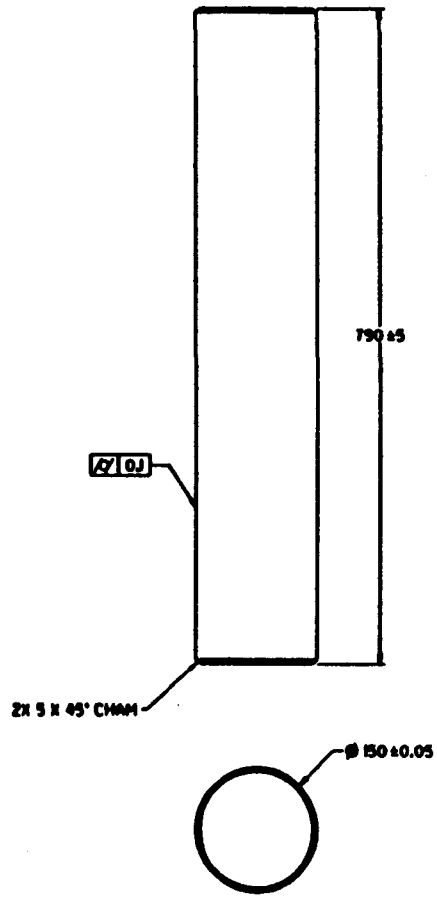

NOTES:

1. NUMBER REQUIRED: 592
2. MAT'L: PIN, SQUARE END, STRAIGHT
   Ø 150 X 790
   AISI 1144 COLD DRAWN
   MIN. YIELD STRESS: 690N/mm²
   MIN ROCKWELL HARDNESS C22

REVISIONS				
ZONE	REV	DESCRIPTION	DATE	APPROVED

QTY	QTY	QTY	PART NUMBER	DESCRIPTION	CAGECO	ZONE	ITEM

LIST OF MATERIALS / PARTS LIST

REF DWG Y-MDT TO BE MAINTAINED

DASH NO. | NEXT ASSY. | QN

APPLICATION

UNLESS OTHERWISE SPECIFIED DIMENSIONS ARE IN MILLIMETERS

TOLERANCE OF ANGLE DIMENSIONS ±0.5

TOLERANCE OF DECIMALS

.X ±0.0 | .XX ±0.13 | ∠ ±0.5°

1. BREAK ALL SHARP EDGES 0.5 MAX.
2. DO NOT SCALE THIS DRAWING.
3. DIM. TO HOLE CALL = DIMS.
4. DIM. ALL HOLES BEFORE FORMING.

DRAWN L. Okay DATE 1-98
CHKD
APPD
APPD
APPD
APPD
APPD
APPD
APPD

CONTRACT NO. DE-AC02-89ER40486

SSC

SDC MBT
CONCEPTUAL DESIGN
PIN DETAIL

SIZE C | CAGECO | DRAWING NO R20000370 | REV

SCALE | WEIGHT