SDC-91-00078

SDC
SOLENOIDAL DETECTOR NOTES

PULSE-HEIGHT DISTRIBUTIONS FROM SCINTILLATORS OF VARIOUS CROSS-SECTIONAL SHAPES

S. Margulies

SDC-91-00078

UIC-4/91-2
26 April 1991
FTG Note

PULSE-HEIGHT DISTRIBUTIONS FROM SCINTILLATORS OF VARIOUS CROSS-SECTIONAL SHAPES

S. Margulies*

Department of Physics
University of Illinois at Chicago

ABSTRACT

The effect of scintillator cross-sectional shape on the resulting pulse-height spectrum is investigated. The intent of the study is to help understand the recent Fiber Tracking Group measurements in which the VLPC photoelectron spectra obtained from Bicron fibers excited by a ^{207}Bi source did not exhibit Poisson distributions. A general result for the pulse-height spectrum from a scintillator of arbitrary cross-sectional shape is developed. As examples, the result is applied to trapezoidal, triangular, and uniform cross-sections. Finally, the result for a circular cross-section, the fiber shape in the recent measurements, is obtained. The spectrum exhibits a long tail at low pulse heights, and reaches a peak at the maximum pulse amplitude. In view of this result, the non-Poisson nature of VLPC photoelectron distributions is not surprising.

*This work was performed in conjunction with the Fiber Tracking Group (FTG), and was supported, in part, by the SSCL/DOE and the Texas National Research Laboratory Commission.

1. Introduction

Understanding the shape of the photoelectron spectrum produced by a VLPC in response to light from a scintillating fiber is an important aspect of developing a tracker based on this technology. For example, the spectra from recent measurements made on Bicron fibers using a ^{207}Bi source presented at the March SDC meeting held at Argonne National Laboratory[1] did not exhibit Poisson distributions. Several phenomena, including Compton scattering of electrons in the fibers by gammas from the source, and Landau fluctuations in the interactions of the electrons from bismuth, were invoked as possible explanations for the observed spectra. With this in mind, it is interesting to examine the effect of the fiber shape on the pulse-height spectrum. That is, the fibers used have a circular cross-section, and particles passing through different regions produce different amounts of scintillation light.

This issue is examined in this note. First, a relation is developed for the pulse-height spectrum produced by a scintillator of arbitrary cross-sectional shape. Next, as an example, this relation is used to calculate the spectra produced by scintillators of trapezoidal, triangular, and uniform cross-sections. Finally, the pulse-height distribution for a circular cross-section is obtained. Unlike the delta function produced by an ideal constant-thickness scintillator, the spectrum consists of a long tail at low values which rises to a peak at the maximum pulse-height value.

2. Scintillator of arbitrary cross-section

Consider a scintillator of arbitrary cross-sectional shape, maximum thickness T, and width W, exposed to a uniform, parallel beam of minimum-ionizing particles of intensity n_o per unit length, per unit time, as shown in Fig. 1.

---

[1] M. Atać *et al.*, "Photon Statistics From a Full Length SDC Scintillating Fiber Tracking Test", presented at the SDC meeting at Argonne National Laboratory, 20-23 March, 1991 (unpublished).

In the calculation that follows, it is assumed that the scintillation light is directly proportional to the thickness traversed, that the efficiency of light collection and transmission to the photodetector is independent of production point, that fluctuations in the scintillation process, light transport, and photodetection are negligible, and that each particle is detected. For this situation, the total counting rate is

$$N_{Total} = n_o W \quad . \tag{1}$$

If V_o is the maximum pulse height produced, the signal produced by a particle incident at x and passing through a thickness t(x) is

$$V(x) = \frac{V_o}{T}\, t(x) \quad . \tag{2}$$

If there are dN pulses with amplitudes between V and dV, then the normalized pulse-height distribution is

$$f(V) \equiv \frac{1}{N_{Total}} \frac{dN}{dV} \quad . \tag{3}$$

Now, the number of particles incident on the scintillator between x and dx is

$$dN = n_o\, dx \quad . \tag{4}$$

From Eq. (2), these particles produce pulses having an amplitude spread $dV = (V_o/T)\, dt(x)$. Since $dt(x) = [dt(x)/dx]dx$, then

$$dV = \frac{V_o}{T} \frac{dt(x)}{dx}\, dx \quad . \tag{5}$$

Thus, use of Eqs. (4) and (5) in Eq. (3) leads to the general result

$$f(V) = \frac{(T/W)}{V_o \frac{dt(x)}{dx}} \quad . \tag{6}$$

3. Scintillators of trapezoidal, triangular, and uniform cross-sections

As an example of the use of Eq. (6), consider first a scintillator of trapezoidal cross-section, as shown in Fig. 2a. Here,

$$t(x) = T_1 + \left(\frac{T-T_1}{W} \right) x \quad ,$$

so

$$\frac{dt(x)}{dx} = \frac{T-T_1}{W} \quad . \tag{7}$$

Use of Eq. (7) in Eq. (6) then gives the pulse-height spectrum

$$f(V) = \frac{T}{(T-T_1)V_o} = \text{const.} \tag{8}$$

for $V_{min} \leq V \leq V_{max}$, where, from Eq. (2), $V_{min} = V_o(T_1/T)$ and $V_{max} = V_o$. This pulse-height distribution is shown in Fig. 2b.

The spectrum of a scintillator with triangular cross-section (see Fig. 3a) may be obtained as a special case of Eq. (8) by setting $T_1 = 0$. There follows

$$f(V) = 1/V_o = \text{const.}$$

for $0 \leq V \leq V_o$. This distribution is shown in Fig. 3b.

The spectrum of the usual scintillator with constant thickness T (see Fig. 4a) may also be obtained as a special case of Eq. (8). Here,

$$f(V) = \lim_{T_1 \to T} \frac{T}{(T-T_1)V_o} = \delta(V-V_o) \quad ,$$

which is illustrated in Fig. 4b. This, of course, is the familiar situation where, ideally, all pulses have the same amplitude.[2]

---

[2]The transition from the flat distribution produced by a trapezoidal scintillator to the delta function produced by a scintillator of uniform thickness is easily understood. For a trapezoid scintillator (see Fig. 2b), as $T_1 \to T$ the lower limit of the distribution, $V_{min} = V_o(T_1/T)$, approaches the upper limit, $V_{max} = V_o$, while the height of the distribution increases correspondingly to maintain unit area. The result of the limit is clearly $\delta(V-V_o)$.

4. Scintillators of circular cross-section

A scintillator of circular cross-section is shown in Fig. 5a. Here, $T = W$ and the equation of the circle, $x^2 + y^2 = (T/2)^2$, for $-T/2 \leq x \leq T/2$, gives

$$4x^2 + t^2(x) = T^2 \quad . \tag{9}$$

Determining f(V) by evaluating Eq. (6) requires a knowledge of dt(x)/dx. Differentiation of Eq. (9) yields

$$\frac{dt(x)}{dx} = -\frac{4x}{t(x)} \quad . \tag{10}$$

However, from Eq. (9), one also obtains

$$x = \pm\tfrac{1}{2}\sqrt{T^2 - t^2(x)} \quad , \tag{11}$$

while from Eq. (2),

$$t(x) = (TV)/V_o \quad . \tag{12}$$

Use of Eqs. (11) and (12) in Eq. (10) then gives

$$\frac{dt(x)}{dx} = \mp 2\sqrt{(V_o/V^2) - 1} \tag{13}$$

To avoid the sign ambiguity, consider first the scintillator half where $-T/2 \leq x \leq 0$ and $dt(x)/dx \geq 0$. This corresponds to the positive sign in Eq. (13) which, when used in Eq. (6), leads to

$$f_{half}(V) = \frac{1}{2V_o\sqrt{(V_o/V)^2 - 1}}$$

for the <u>left half</u> of the scintillator. Because of symmetry, the result for the full scintillator is just twice this value, or

$$f(V) = \frac{1}{V_o\sqrt{(V_o/V)^2 - 1}} \tag{14}$$

for $0 \leq V \leq V_o$. This distribution is shown in Fig. 5b. As can be seen, the distribution exhibits a long tail at low pulse heights, and reaches a peak at the maximum pulse amplitude V_o. The average pulse height is found to be

$$\bar{V} \equiv \int_0^{V_0} dV\ V\ F(V) = \pi V_0/4 \quad .$$

This is consistent with the average distance $\bar{d} = \pi d/4$ traversed in a fiber of diameter d by a normally crossing particle.

5. Conclusions

According to conventional wisdom, the spectrum of photons from a scintillator of constant thickness exhibits a Poisson distribution observable when the total number of photons is small. When folded with the binomial probability distribution resulting from a photodetector of efficiency less than unity, the resulting photoelectron spectrum also has Poisson shape.[3]

This note has shown that, as expected, the cross-sectional shape of a scintillator has a considerable -- and easily calculated, under ideal conditions -- effect on the resulting pulse-height spectrum. Since even under ideal conditions the detected photoelectron spectrum is a folding of this spectrum, the scintillation fluctuation spectrum, the light transmission fluctuation spectrum, and the binomial photodetector probability distribution, it is not surprising that the results obtained using scintillating fibers of round cross-section differ from the Poisson shape.

---

[3]D.L. Fried, Applied Optics 4, 79 (1965).

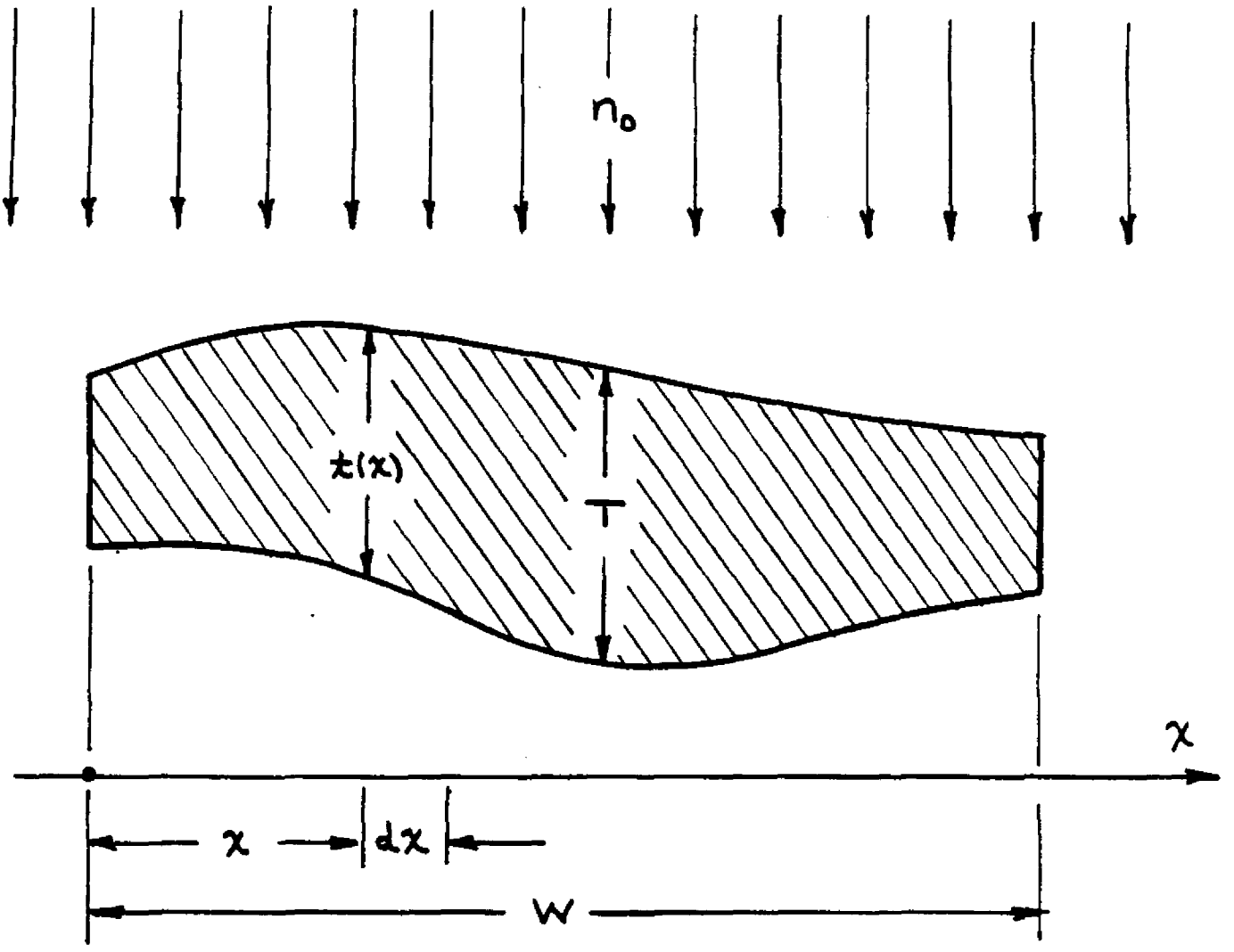

Figure 1. Uniform flux of minimum-ionizing particles incident on a scintillator of arbitrary cross-sectional shape.

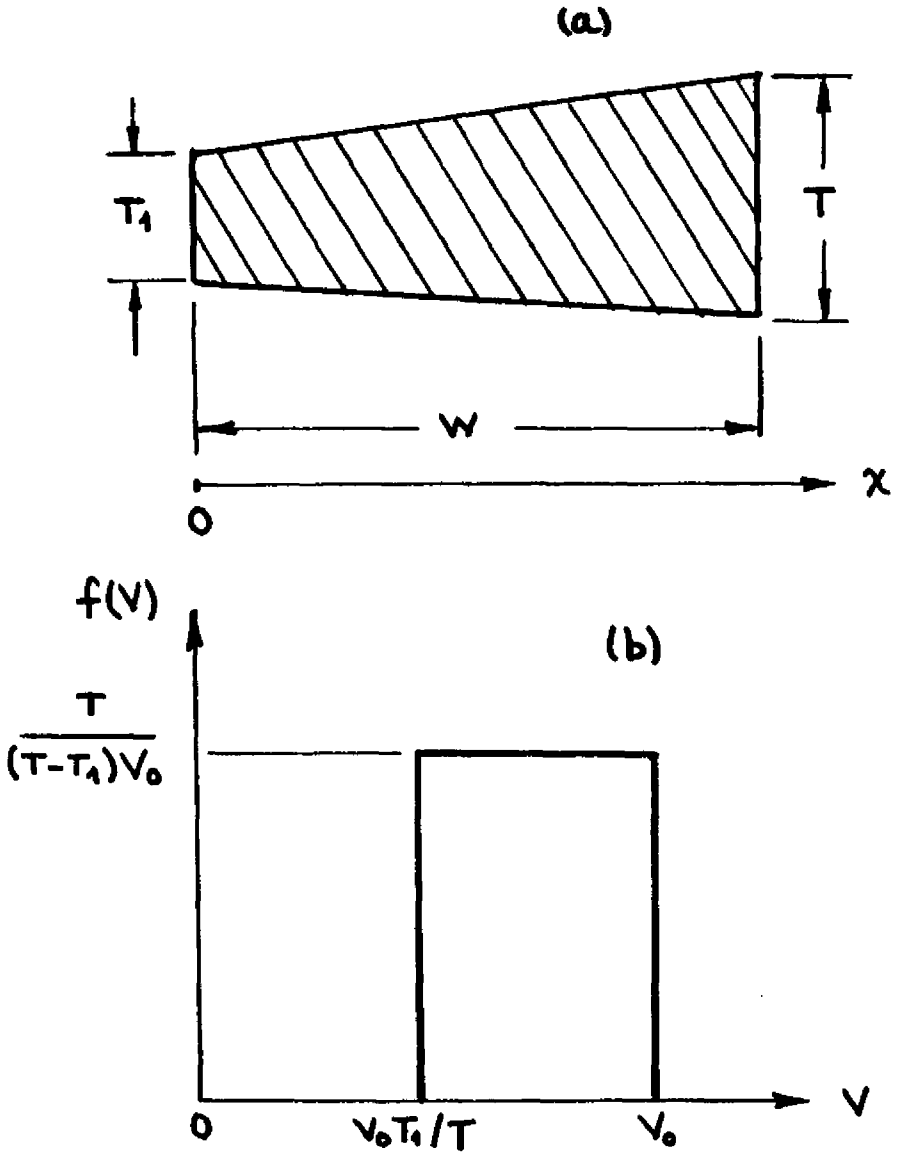

Figure 2. Trapezoidal scintillator.
(a) Cross-sectional shape.
(b) Pulse-height distribution.

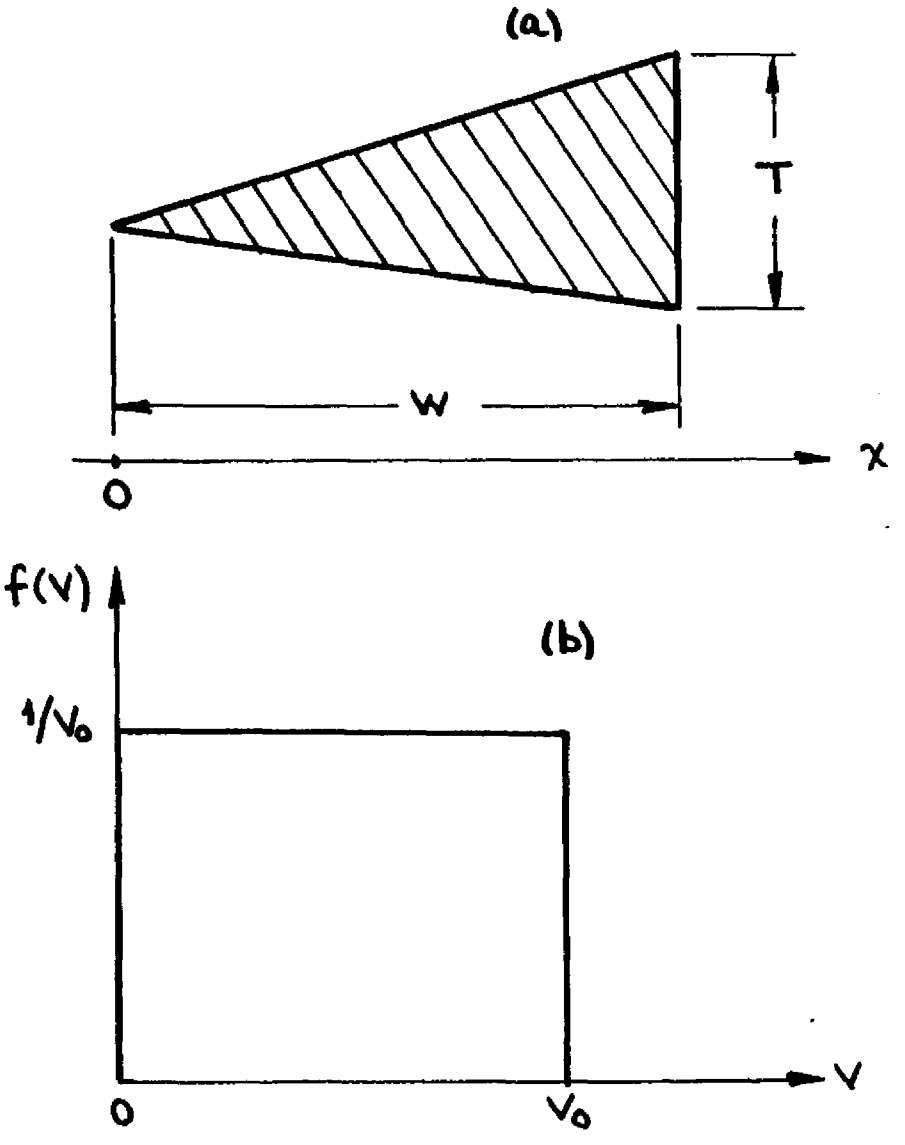

Figure 3. Triangular scintillator.
(a) Cross-sectional shape.
(b) Pulse-height distribution.

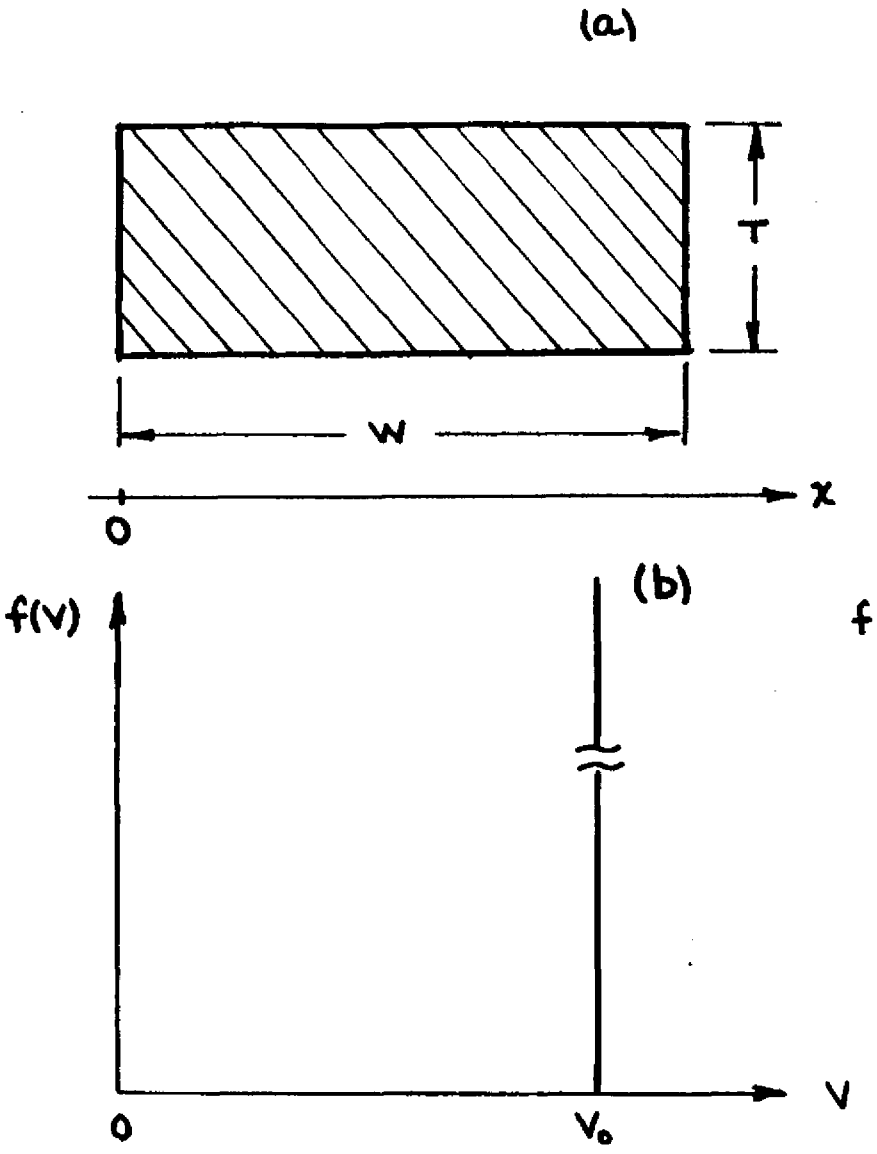

Figure 4. Rectangular scintillator.
(a) Cross-sectional shape.
(b) Pulse-height distribution.

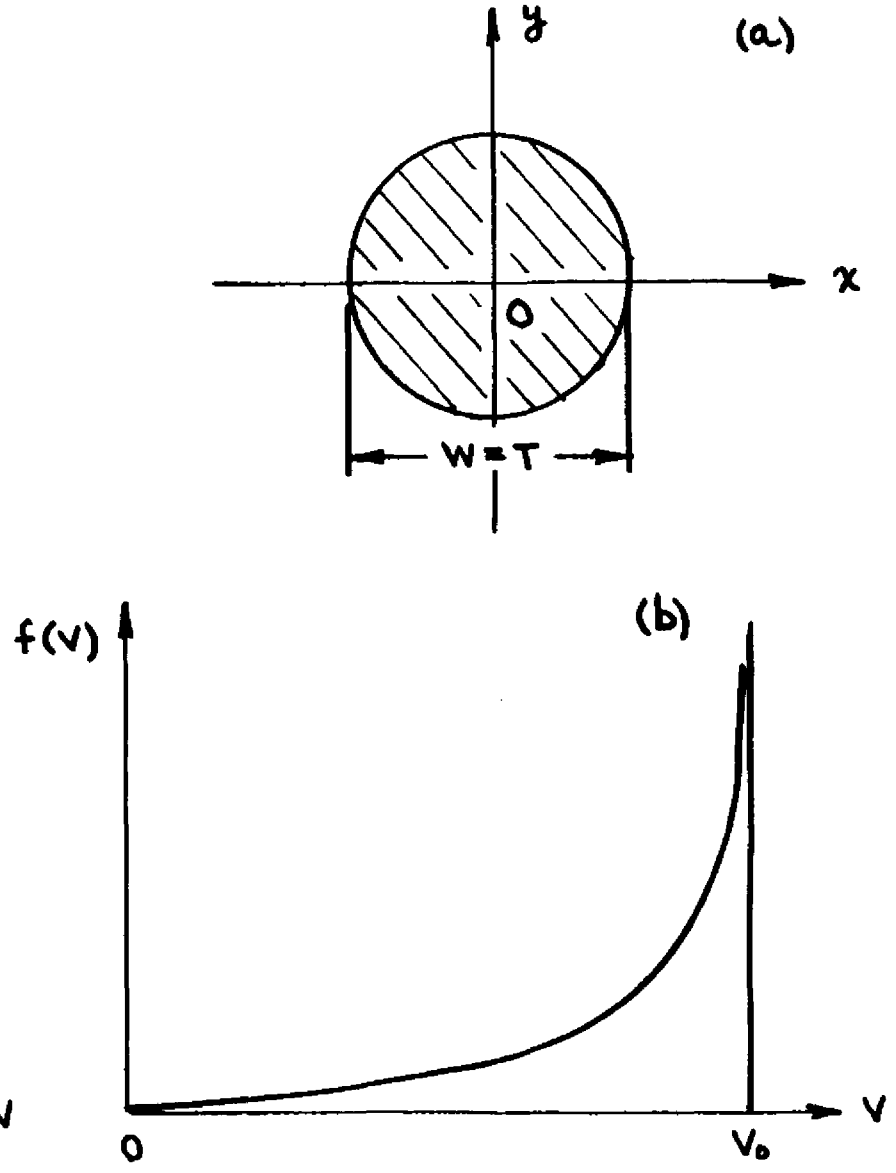

Figure 5. Circular scintillator.
(a) Cross-sectional shape.
(b) Pulse-height distribution.