SDC-91-00071

SDC
SOLENOIDAL DETECTOR NOTES

ENGINEERING CHALLENGES FOR SCINTILLATING FIBER TRACKING AT THE SSC

D. Koltick

SDC-91-00071

Engineering Challenges for Scintillating Fiber Tracking at the SSC*

David Koltick
Physics Department, Purdue University
West Lafayette, Indiana 47907

Abstract

A scintillating fiber charged particle tracking detector for use at the SSC is presented. The design is highly segmented as well as capable of very high data rates. It's more than 10^6 channels are simple in design so that industrialization of its production can easily be accomplished. The scintillating fibers used range between 500μm and 1mm. Upon passage of a charged particle through a fiber light is emitted. For a faction of the photons the fiber acts like a wave guide, transmitting the photons to a transducer outside the active detection region. The tracker extends 8 meter in length by 3.2 meters in diameter.

For many reasons it is desirable to use scintillating fibers at the SSC to build a charged particle tracker. The engineering challenge necessary to reap the full physics capability of this technology will ultimately set the pace of its application.

Present charged particle tracking technology is dominated by drifting electrons through a gas in the presence of a high electric field. In this wire chamber technology electrons drift towards an anode typically ~25 μm in diameter. Because the wire is tensioned between two accurately machined endplates, the precision comes about from the 2-dimension machining accuracy of the endplates. Groups building vertex chambers have obtained accuracies of 1μm-2μm in the machining of these endplates. Vertex chambers have obtained absolute measurement errors of 20μm-30μm, limited not by the construction errors but by the electron drift dispersion in the gas.

While wire chamber technology is mature, being over 50 years old, it has many disadvantages; electron drift is inherently slow, limiting the size of the drift cell in high speed operation. The use of gases, often explosive or flammable, and the need to flow these gases over a large system requires complex manifold and endplate structures. The use of high voltage requires complex endplate design and electronic components to be placed within the gas volume. The very thin sense wires are very fragile so that wire breakage can be a problem. A single wire breakage can cause an entire section of a chamber to fail because of the common high voltage line used for that section. A major construction problem is that a large chamber will not work unless its component parts lie absolutely along a straight line to within very high tolerances (~100μm), a difficult task for a large SSC system ~4 meters long.

None of these problems apply to a scintillating fiber tracking system. A scintillating fiber system is a totally passive system. Once built and installed, it should need no maintenance. There are no gases, no high voltages nor delicate parts to break. If a single fiber should "fail" for some reason, it will not effect any other fibers since each acts independently. The major problem with the use of scintillating fibers is the 3-dimensional nature of the construction problem that they present. This problem comes about because polystyrene or a mechanically similar material will be used as the base material for the fiber. Because of this material's plastic properties the construction problem cannot be limited to 2-dimensions by the use of an endplate. The full 3-dimensional accuracy of the tracker must be addressed. Nonetheless for physics reasons similar measuring resolutions, as obtained with the best wire chambers are desirable and theoretically

* This research was conduced by the Fiber Tracking Group, a list of authors can be found in "Scintillating Fiber Tracking for the SSC", R. Ruchti, et. al., these proceedings

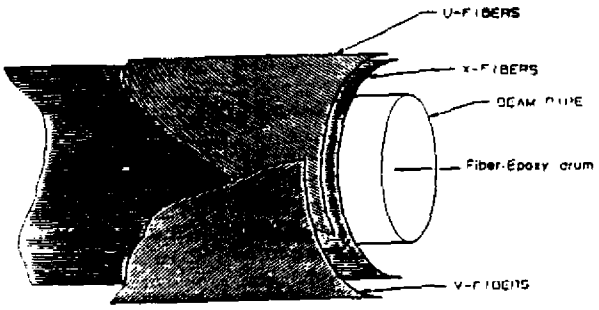

Figure 1: Schematic showing the ease of constructing the scintillating fiber tracker.

obtainable with scintillating fibers. To achieve such accuracy, fiber placement errors no greater than 25μm over a 3 dimensional surface are required, using fibers ranging in diameters between 500μm - 1mm. One saving grace of the fibers is that one does not have to position the fiber along a straight line. It is the position of the fiber at any point that must be known to 25μm. This extra freedom allows many more design solutions. For example, fibers can twist and bend in 2 or 3 dimensions.

For the central region the scintillating fibers will be formed onto cylinders as shown in Fig. 1. Three orientations of the fibers will be used. The main orientation will lie parallel to the axis of the drum while 2 others known as stereo orientations will lie at plus and minus 5 degrees with respect to the cylinders axis. It would be advantageous to build up the cylinders using modules, but unless each sublayer of the cylinder can be built individually, the use of stereo layering calls for unimodular construction of a superlayer as shown in Fig. 2.

At present we have taken the attitude that we must remove one degree of freedom at a time during the construction of the tracker. First the fiber's movement relative to one another will be removed by forming the fibers into ribbons. Fibers are now being manufactured to tolerances of 1% in their diameters. While this is excellent it will not allow the ribbons to be built up by simply placing the fibers one next to another. There must be a gap between fibers to allow for run out errors if high resolution measurements are to be made. A gap of 1.5% of the fibers nominal diameter will be adequate.

The ribbons will be place accurately on a fiber-epoxy composite drum. The drum needs to have a high precision radius. It is important that the layer to layer placement of the ribbons also be of high accuracy. Presently we are planning a sublayer to consist of 4 individual layers of fibers each staggered by 1/4 fiber diameter. The need to correlate the layers becomes clear by

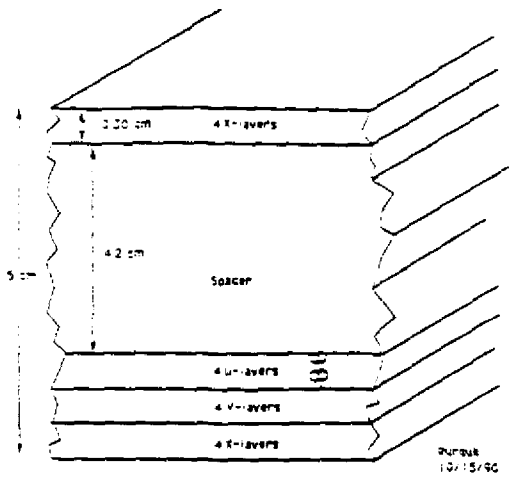

Figure 2: Cross sectional view of a central region superlayer.

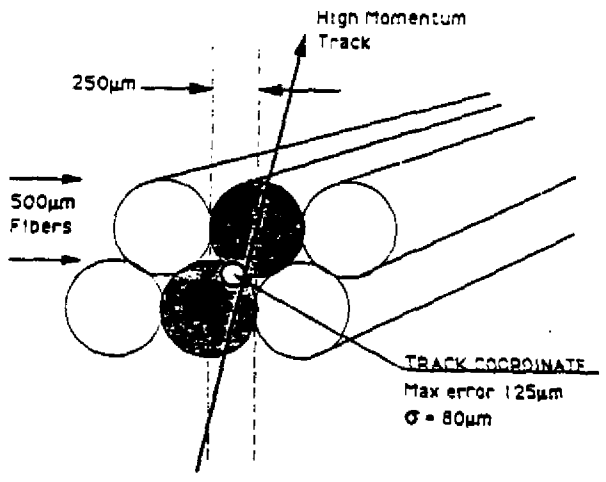

Figure 3: Schematically shown is the resolution obtainable using 500 μm fibers. By staggering the fiber layers, a passing track can be localized to a strip only 250 μm wide. By taking the coordinate at the center of the strip, the maximum error reduces to 125 μm. This yields a measuring resolution of 80 μm for two layers and 40 μm for four layers.

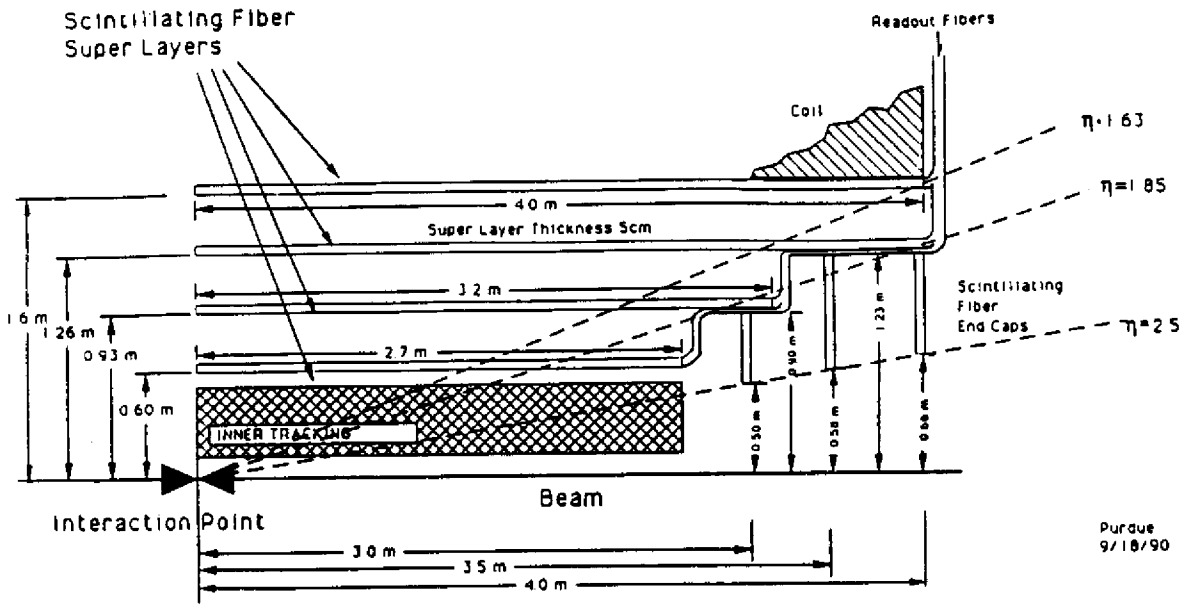

Figure 5: Cross sectional view of the scintillating fiber tracking system. The break in the tracker at the interaction point is done so that the fibers respond to only one beam crossing.

studying Fig. 3. The correlated layers have a measuring resolution which improves much faster than by the square root of the number of measuring layers, the expected rate of improvement for uncorrelated layers. By using 4 layers and their pattern of hits, a sublayer made of 500μm fibers is capable of achieving ~40μm resolution, whereas we would expect only ~125μm otherwise.

The structure of the superlayers in the forward direction takes full advantage of the flexibility of the fibers, Fig. 4. Here an area filling spiral design is used. The spiral has a left hand twist on two of the sublayers and a right hand twist on the next two, followed by two layers of fibers that lie on a constant radius. Again these spiral structures will have to be laid down with a precision of 25μm. However, the forward tracker can be constructed on 2-dimensional endplates so that the construction for this region should be conventional.

The overall tracker design is shown in Fig. 5. The scintillating fibers cannot be used as wave guides because the light has a very short attenuation length within these fibers. A clear wave guide fiber will be used which consists of the same base material as the scintillating fiber except the dopant (~1% by weight) will be left out. The attachment of the wave guide fiber to the scintillating fiber has been successfully accomplished with typical transmission efficiencies of 97%. But the mass production of fiber ribbons which make this transition is yet to be achieved. Ideas to accomplish this task include the production of boules containing alternating layers of clear and scintillating material to be pulled into fibers which would readily be turned into ribbons. Another idea would have a machine fuse individual clear and scintillating fiber as a basis for ribbon making. Still another approach would have wave guide and scintillating ribbons fused together using a laser.

The engineering challenges that confront the application of scintillating fiber to solve the physics problems of the SSC are clear. The job now is to find the best approach to accomplish the task.

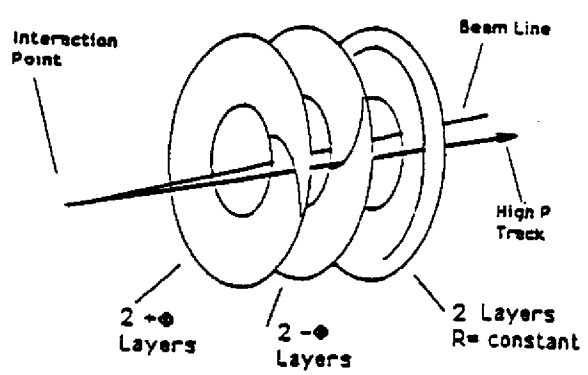

Figure 4: Super sublayer of the intermediate tracker.