SDC-91-00066

SDC
SOLENOIDAL DETECTOR NOTES

SCINTILLATING FIBER TRACKING USING VISIBLE LIGHT PHOTON COUNTERS

M. Atac, M. Petroff

SCINTILLATING FIBER TRACKING USING VISIBLE LIGHT PHOTON COUNTERS

M. Atac*
Fermi National Accelerator Laboratory, Batavia, IL 60510
University of California, Los Angeles, CA 90024-1547

Michael D. Petroff
Science Center
Rockwell International Corporation
Anaheim, CA 92803

Abstract

Work on scintillating fiber tracking using recently developed Solid State Photomultipliers (SSPM) is presented. Recent tests show that more than 4 photoelectrons are obtainable from a 0.5 mm thick 3HF-PTP doped and PMMA clad scintillating plastic fiber using 1 MeV electrons of a collimated Bi 207 source at a distance of 60 cm. Possible development of a visible light optimized version of the SSPM is presented; some test results and future plans are summarized.

Introduction

High luminosity operation of collider detectors create the need for fast tracking systems. The SSC is designed for a luminosity of 10^{33} cm^{-2} sec^{-1} and is considered to be increased to 10^{34}. The CDF and D0 experiments at Fermilab may be upgraded to operate at luminosities approaching $5 \cdot 10^{31}$ cm^{-2}sec^{-1}. LHC at CERN is being advertised to run at 10^{34} and beyond. If tracking is to work well at these luminosities, it needs to produce a signal faster than any previous tracking technology. We believe that the future collider detectors should utilize light transmission speeds within the tracking volume. The tracker should also be finely segmented to minimize occupancy rates per tracking element. All of this can be achieved using scintillating fibers connected to Visible Light Photon Counters (VLPCs), recently developed by Rockwell International Science Center.

The first suggestion to use scintillating fibers for charged particle tracking [1] were made in 1980, but to date results have not been totally successful. The problem has been the lack of an adequate photon detector having single photon sensitivity. Until now avalanche photodiodes (APDs) were the most promising candidates but their operation tends to be unstable. Gain variations when operated in the avalanche mode are large. Typical gains for 200-300 in this mode made single photon counting impractical. Operating the ADP in the Geiger mode generates gains as large as 10^7, but the deadtime of the device is too long for high rate applications. The problem occurs because there are trapped charges that can take up to a second to remove [2].

One successful application of scintillating fibers to charged particle tracking was achieved by the UA2 experiment at CERN [3]. The success of the tracker was somewhat limited by the quantum efficiency of their photon detectors. Typically bialcali photocathodes have quantum efficiencies of ~ 15%- 20%. Nonetheless, using fibers of 1mm diameter, tracking efficiencies of 80% were obtained for detecting minimum ionizing particles.

Collaborative work between Rockwell International Science Center (M. Petroff) and UCLA (M. Atac) has produced very encouraging experimental results using the newly developed Solid State Photomultipliers (SSPMs) [4]. These devices overcome the past shortcomings of other photodetectors. They have a quantum efficiency of between 60% and 80% and can be operated up to a gain of $5 \cdot 10^4$. Furthermore, they have a rate capability of several times 10^9 photoelectrons per cm^2 per second.

Presently Rockwell and UCLA are working on visible light-optimized version of the SSPMs. These are the Visible Light Photon Counters (VLPCs). In this operation, dark pulse count rate will be reduced, the count rate capability will be increased, time reso-

*Talk given at the Dallas SSC Detector R&D Workshop, October 13-15, 1990. This work is supported by the U.S. DOE under Contract No. DE-AMO3-76SF00010, Project Agreement No. DE-ATO3-883440384 with UCLA.

lution and the quantum efficiency will be improved.

The VLPCs and SSPMs need to be cryogenically cooled. The operating temperature is between 7° K and 10°K, otherwise the thermal electron pulse rate would be intolerably high. Repeated tests have shown that thermal cycling is not a problem for the thin plastic fibers that transmit the photons to the VLPCs.

The success of the work at UCLA and Rockwell led to a larger collaborative effort: the Fiber Tracking Group (FTG) [6]. Its focus is to fully develop the fiber tracking concept for the SSC. The work reported here is the result of this research and development effort which is supported by SSCL and DOE.

Central Tracking for the SDC

The SDC is designed to be a general purpose large solenoidal detector to do physics at the SSC (see SDC EoI). It is designed to identify and measure momenta precisely for isolated leptons, to use in first level trigger, to determine transverse momenta for electrons and muons, and to identify secondary and multiple vertices, especially for multi-lepton events. To do this physics at the SSC, we need a tracking system with low occupancy for each track element, with very good time resolution (< 16 nsec), providing a powerful trigger to select high momentum tracks, and that can operate up to a luminosity of 10^{34}. The tracking system should have an uncomplicated readout. We are convinced that scintillating fiber tracking using VLPC readout will satisfy the above requirements. A simple latch to identify a hit fiber is sufficient for the readout.

Figure 1 shows a cross section view of the SDC. The tracking for the SDC needs to be an integrated system for obtaining excellent momentum resolution with triggering capability to point charged particle tracks to calorimeters with precision. The best combination is to use silicon-strip tracking around the beam pipe up to a radius of 50 cm and follow up with scintillating fiber tracker up to the solenoid using superlayers of fibers. An enlarged view of the central tracking system is shown in Fig. 2. Since our subject is mainly the readout of the scintillating fiber system, we will not go into great detail about the structure of the superlayers here.

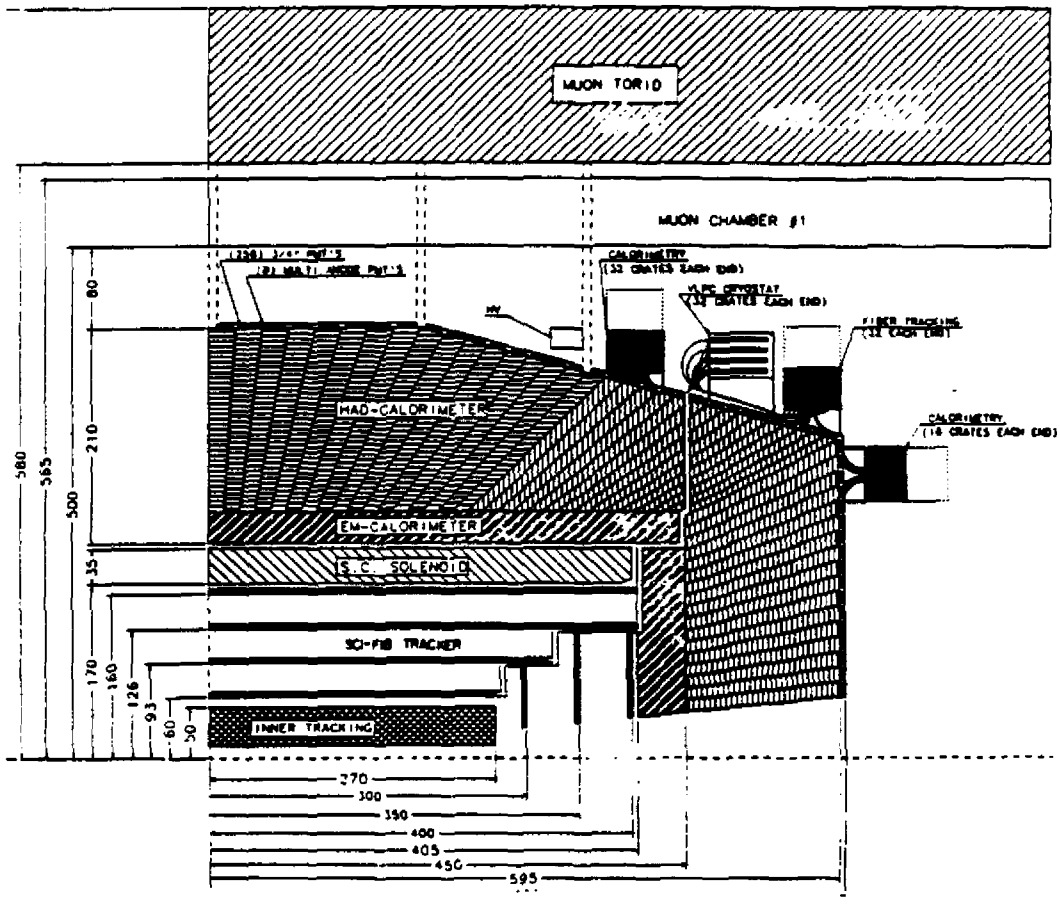

Fig. 1. Schematic view of quarter cross section of central part of the SDC.

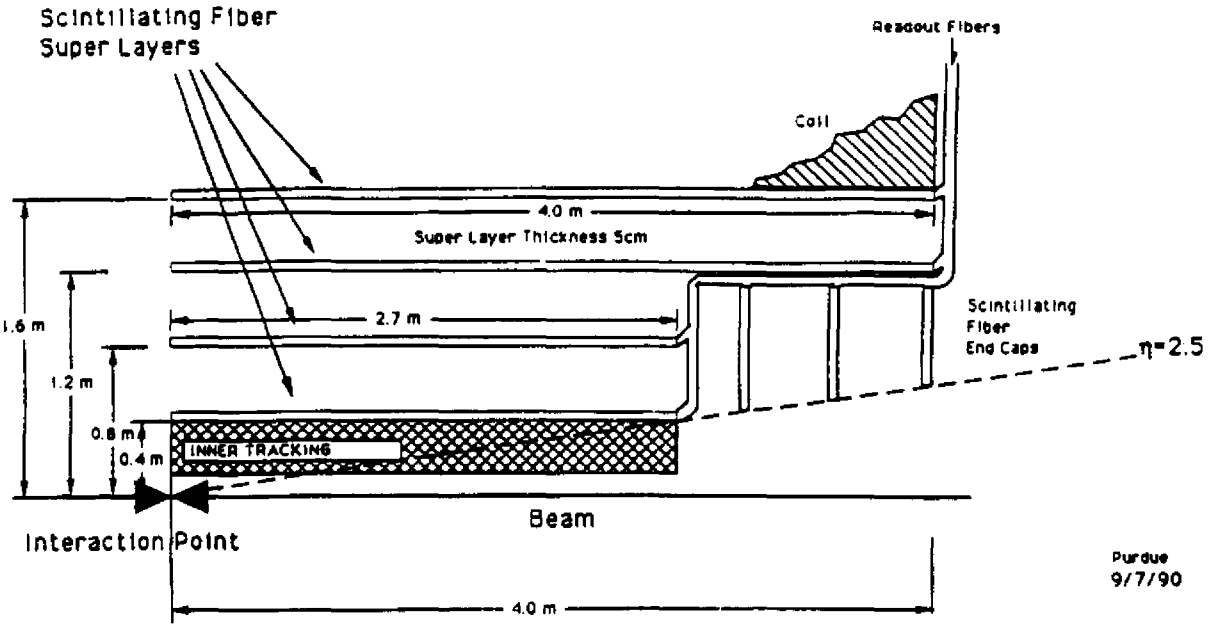

Fig. 2. An enlarged view of the inner tracking of the SDC.

In general each scintillating fiber is spliced to a nonscintillating optical fiber guide to carry the photons onto a VLPC element. This is schematically shown in Fig. 3.

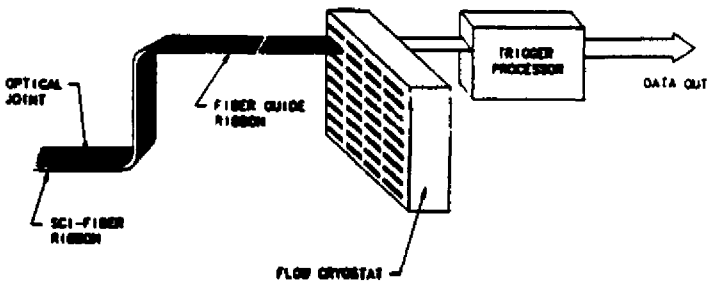

Fig. 3.

Studies of Fibers with VLPC Readout

First experiments using scintillating fibers and SSPMs were carried out at Rockwell International Science Center, Anaheim [4]. Figure 4 shows the experimental arrangement. Photons produced from two 180 micron thick scintillating fibers with square cross section were detected by two SSPMs in coincidence. One of the fibers was used for triggering a pulse height analyzer for obtaining the spectra in Fig. 5. A collimated beta source was held at two different positions, resulting in an attenuation length of 180 cm in the thin scintillating fiber. This was the first time the SSPMs were used in the Visible Photon Counting (VLPC) mode using scintillating fibers.

Later more tests were done at UCLA and Fermilab. Recent results obtained from 0.5 mm diameter scintillating fiber, polystyrene core doped with 3HF+PTP and PMMA clad (produced by BICRON Corp.) show photoelectron yield using a collimated Bi^{207}–1 MeV electrons at distance of 60 cm from the SSPM. The average number of photoelectrons is ~ 4. Figure 6 shows the incredible resolution obtainable up to 10 photoelectron peaks. They are well resolved. orresponding oscilloscope picture is shown in Fig. 7. The pulse shape is mainly determined by an integrating FET preamplifier. Faster rise time, about 20 ns, is obtainable from a faster preamplifier (Fig. 8).

For the above results, a simple dipstick cryostat was used (Fig. 9). The temperature of the SSPM housing was monitored and controlled by simple Allen-Bradley carbon resistors. The temperature needs to be controlled within 1°K around 7°K. It was controlled by a simple operational amplifier feedback circuit.

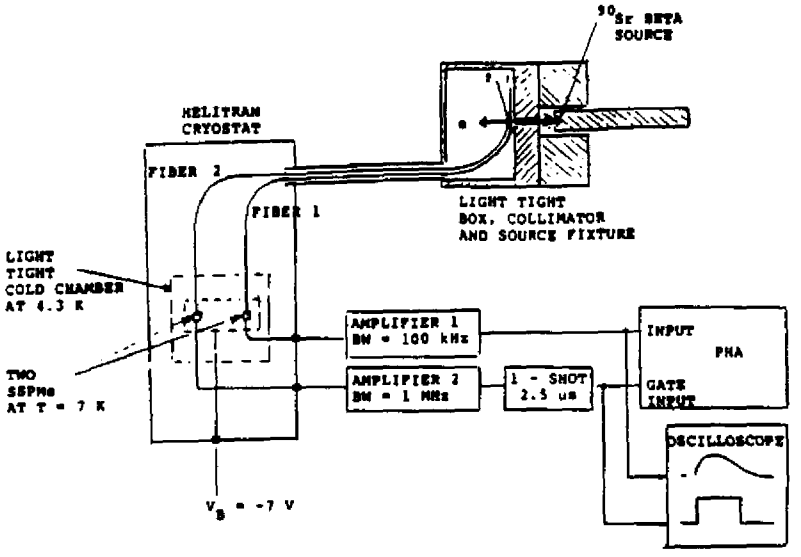

Experimental Arrangement for Detection of Fiber Scintillations

Fig. 4.

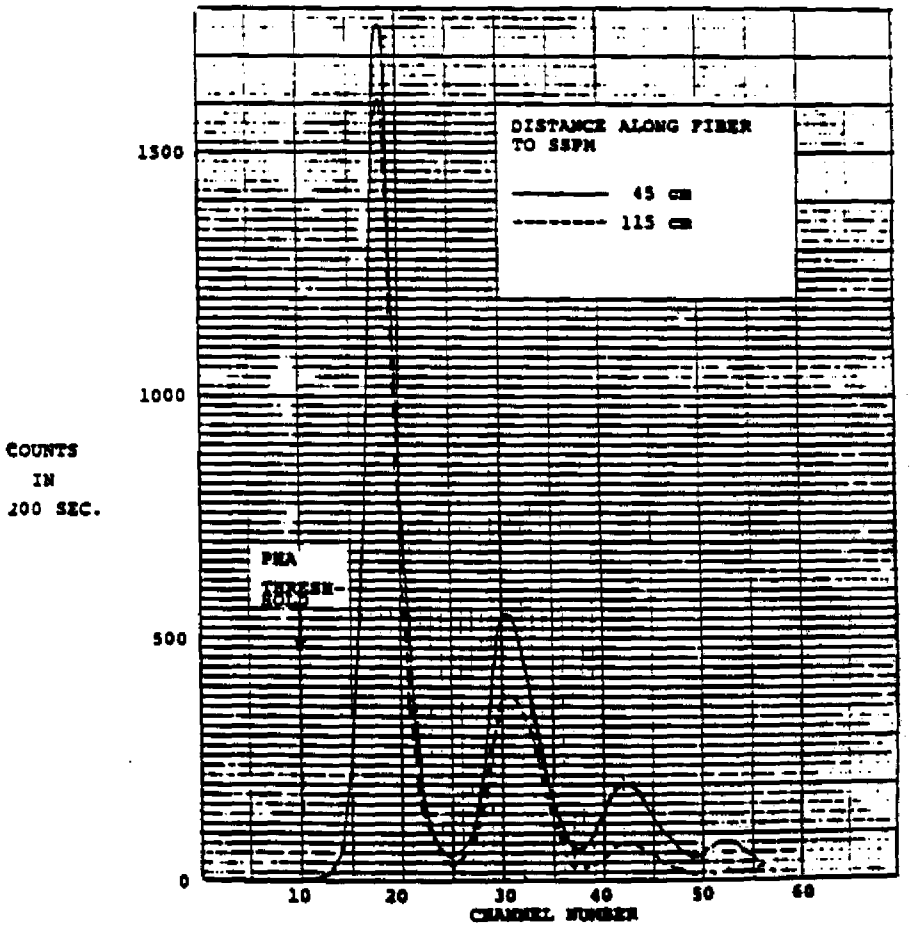

SSPM Pulse Height Distributions for Fiber Scintillations at two Positions of Beta Beam

Fig. 5.

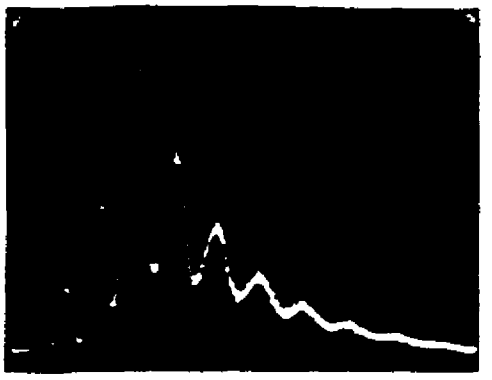

Fig. 6. Frequency distribution of simultaneous multiple photoelectrons detected by the SSPM from a 0.5 mm 3HF fiber.

Fig. 7. Oscilloscope picture of the multiple photoelectron pulses in well resolved bands detected by the SSPM.

Visible Light Photon Counters (VLPC) and Future Experiments

Rockwell International Science Center under a contract from UCLA is working jointly to produce VLPCs. The work is supported by Superconducting Supercollider, Department of Energy. This is a part of the Detector Subsystem R&D for the SSC. The VLPC differs from the SSPM in spectral response, rate capability, and the risetime. We expect high quantum efficiency (around 80%) for visible photons, wavelengths between 500 to 600 nanometers, higher rate capability than that is obtainable from the SSPM, and the pulse risetime better than 10 ns. We believe that the quantum efficiency of the VLPCs for wavelengths about 1 micron will be very poor.

The Fiber Tracking Group is preparing a beam test using 256 channel VLPC-fiber system to study operation characteristics of the VLPCs together with fibers. In this we plan to have four groups of 64 fibers which are spaced apart to study tracking. We hope to determine photon yield per fiber as a function of the fiber length, track angle, and tracking accuracy, double track resolution, and tracking efficiency.

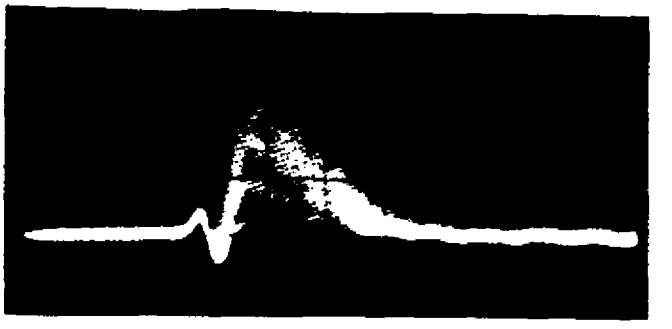

Fig. 8. Oscilloscope picture of the multiple photoelectron pulses with a FET charge integrating amplifier showing that a risetime of about 20 ns is obtainable.

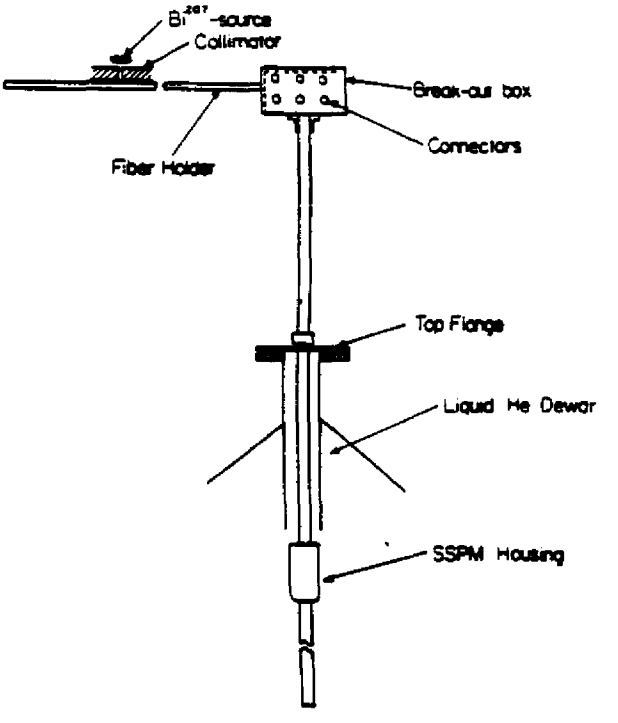

Fig. 9. The dipstick cryostat that is used to obtain the above results.

Figure 10 shows VLPC socket assembly. With this prototype arrangement each VLPC element is wire microbonded to a socket pin to carry the signal out individually. Groups of fiber ribbons are directly held across the VLPCs at a distance of about 75 microns with a precision of 25 microns. The optical fiber ribbons are clamped and potted in their precise positions. The VLPC socket assembly with the non-scintillating optical fiber ribbon is kept in a liquid helium flow cryostat at helium atmosphere.

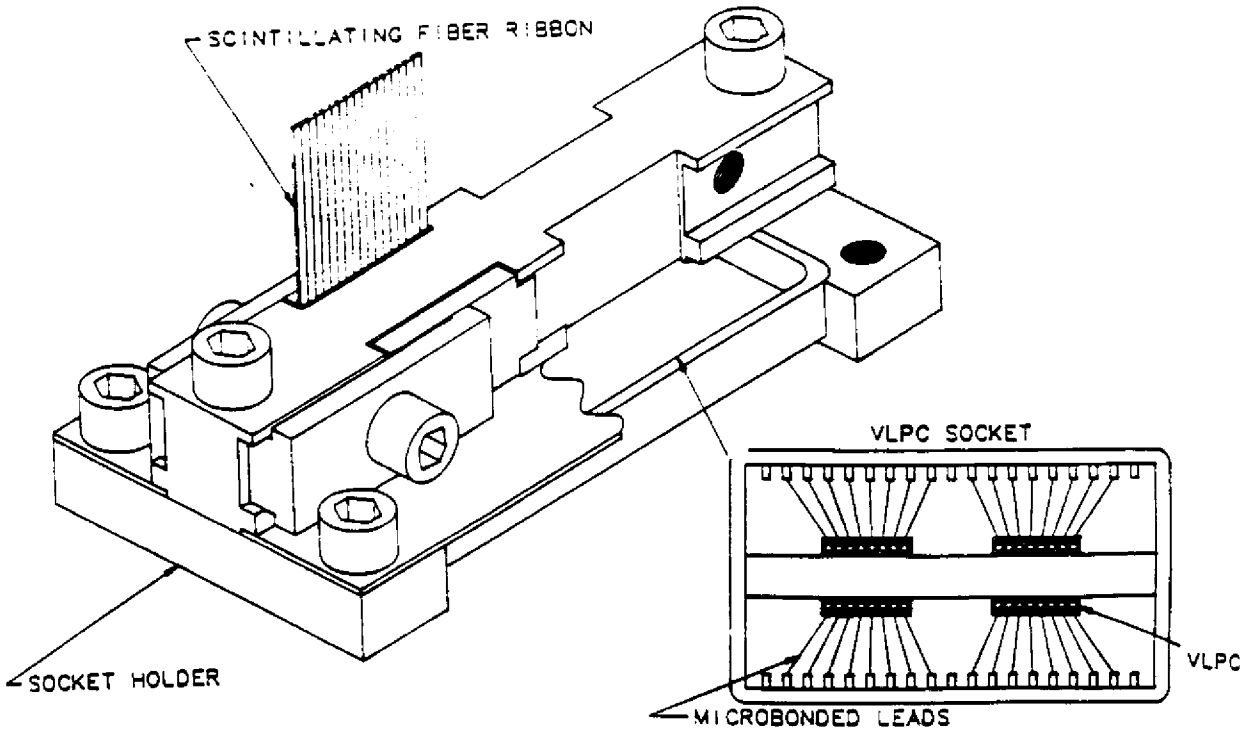

Fig. 10. The VLPC-socket assembly with fiber ribbon position arrangement for multiple fibers and the VLPCs.

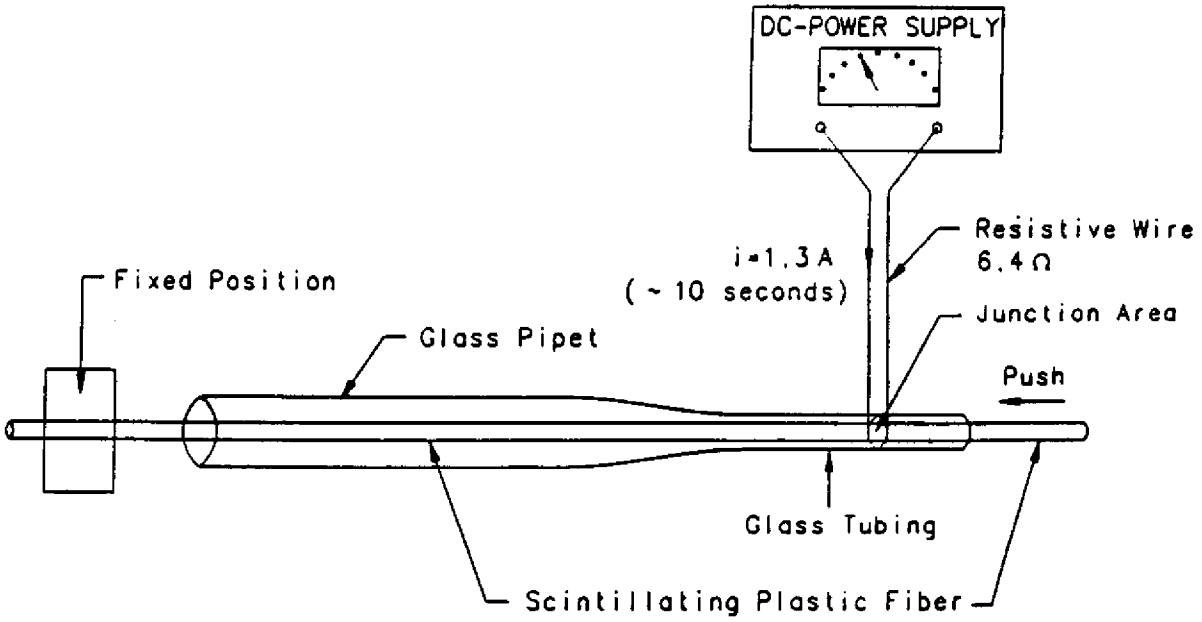

Fig. 11. Describes a simple method for splicing plastic scintillating fibers.

For the beam test each scintillating fiber of a ribbon is spliced to a nonscintillating optical fiber using a simple technique that was developed by M. Atac and W. Foster at Fermilab [5]. Figure 11 describes how the splicing is accomplished. Using this technique, 95-98% optical transmission efficiency can be accomplished through the spliced junction. Figure 12 shows that the transmission loss is within the experimental error.

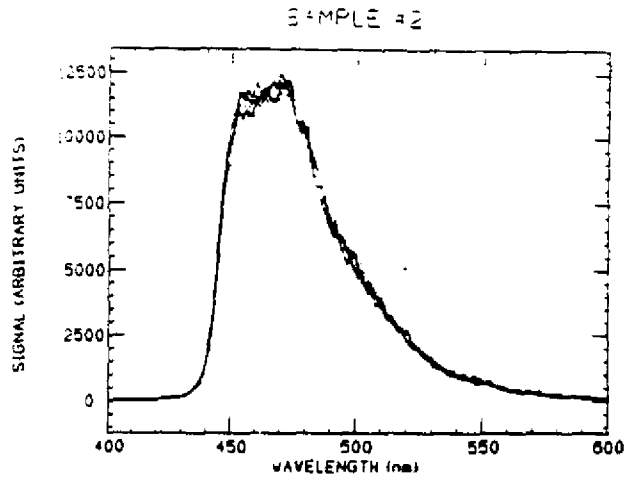

Fig. 12. Shows the transmission efficiency through a spliced joint. Dotted curves are before and solid curves are after the spliced joint when the fiber was excited by a UV-light source.

The Fiber Tracking Group is planning to do the beam tests in conjunction with the scintillating tile calorimeter tests prepared by J. Freeman and W. Foster of the CDF using the pipelined trigger system (see W. Foster's contribution to this conference).

Summary

The scintillating fiber tracking with VLPC readout looks very promising for the high luminosity operation of the SSC due to high rate capability, very small occupancy per fiber (less than 0.5%) at the design luminosity of 10^{33}, simplicity of the digital readout, fast triggering capability, the fiber and the readout being immuned to magnetic fields, present availability of radiation hard scintillating fibers around 500-600 mm wavelength of photons where the quantum efficiency of the VLPCs expected to peak around 80%.

We believe that we have some hard work ahead of us to prove the capability of the scintillating fiber tracking with the VLPC readout, realizing the need and importance of it.

References

[1] S. R. Borenstein, R. B. Palmer, and R. C. Strand, Physica Scripta 23, 550 (1981).

[2] S. Reucroft and M. Salomon; two separate contributions to this conference proceedings.

[3] Proceedings of the Workshop on Scintillating Fiber Detector Development for the SSC, Vol. 1&2 (Nov. 1988).

[4] M. D. Petroff and M. G. Stapelbroek, IEEE Trans. Nucl. Sci. N.S.36, 158 (1989); M. D. Petroff and M. Atac, IEEE Trans. Nucl. Sci. N.S.36, 163 (1989).

[5] M. Atac, W. Foster, and M. Lundin, Fermilab Report FN-537 (March 1990).

[6] Fiber Tracking Group: B. Abbott[h], D. Adams[i], E. Anderson[j], M. Atac[a,b], C. Anway[a], A. Baumbaugh[b,d], P. Berge[b], P. Besser[j], R. Bharat[j], M. Binkley[b], J. Bishop[b], N. Biswas[d], A.D. Bross[b], C. Buchanan[a], N. Cason[d], R. Chaney[k], D. Chrisman[a], A. Clark[b], D. Cline[a], H. Cohn[e], M. Corcoran[i], R. Davis[h], J. Elias[b], E. Fenyves[k], D. Finley[b], G.W. Foster[b], J.-M. Gaillard[b], J. Godfrey[d], H. Goldberg[c], H. Hammack[k], X. Huang[d], J. Jacques[d], V. Kenney[d], R. Kephart[b], D. Koltick[h], J. Kolonko[a], K. Kondo[l], R.A. Lewis[g], J. Marchant[d], R. McIlwain[h], S. Margulies[c], H. Miettenen[i], R. Moore[g], R. J. Mountain[d], T. Okusawa[f], M. Petroff[j], J. Piekarz[d], A. Pla-Dalmau[b], R. Ruchti[d], R. Scalise[g], W. Shephard[d], E. Shibata[h], G.A. Smith[g], J. Solomon[c], K. Takikawa[l], S. Tkaczyk[b], and R. Wagner[b]

[a] University of California at Los Angeles
[b] Fermi National Accelerator Laboratory
[c] University of Illinois at Chicago
[d] University of Notre Dame
[e] Oak Ridge National Laboratory
[f] Osaka City University
[g] Pennsylvania State University
[h] Purdue University
[i] Rice University
[j] Rockwell International
[k] University of Texas at Dallas
[l] Tsukuba University