SDC-91-00041

SDC
SOLENOIDAL DETECTOR NOTES

Boiling Near Preamplifiers in LAr Calorimeters

F. Lobkowicz, G. DiLoreto

July 1, 1991

BOILING NEAR PREAMPLIFIERS IN LAr CALORIMETERS

F. Lobkowicz, Gian DiLoreto

University of Rochester
Department of Physics and Astronomy
Rochester, New York 14627
July 1, 1991

We describe tests done at Rochester on LAr boiling in the presence of amplifiers and other heat–dissipating electronics.

I. INTRODUCTION

In any high-speed Liquid argon ionization calorimeter the amplifiers have to be very near the detector element, and in a large detector like the SDC calorimeter this implies that the amplifiers have to be inside the liquid. However, these amplifiers necessarily dissipate some power and thus heat the nearby liquid. At some temperature the liquid will start boiling, and it is a priori possible that a gas bubble might enter the region of high voltage inside the ionization chamber itself. This would induce a voltage breakdown, which might destroy the amplifier. There will be some 50,000–100,000 such amplifiers in an SDC calorimeter; thus the total heat dissipation, and the boiling problems, are significant.

It is imperative that boiling either be prevented, or that, should it occur, no bubbles enter the active volume. One notes that boiling can only occur if the local liquid temperature is above the "local boiling temperature" (LBT), and that this LBT increases with ambient pressure and thus with the depth below the surface. In the region of 86–90K one can approximately write for the boiling temperature at a given depth below the surface:

$$LBT = (\text{surface} \quad \text{temperature}) + C * \text{depth}$$

Where

$$C = 1.2 - 1.4 \quad K/\text{meter}$$

The final amplifier arrangement, as well as the power dissipated by each amplifier, is not yet known. However, it is today possible[1] to have two amplifiers, each dissipating 70 mW, on a ceramic substrate of size 0.6 x 0.8 ". The final arrangement is likely to be smaller and the dissipated power to be lower. This note describes a study whether and under what conditions such an amplifier arrangement will lead to boiling.

II. EXPERIMENTAL SETUP

We have built a test setup which enables us to study questions associated with boiling near preamplifiers inside LAr. Figure 1 shows a sketch of the apparatus. A 15" diameter, 36" deep stainless steel cryostat has two independent cooling systems: The system L lets LN_2 at ambient pressure flow through a two–turn copper cooling coil above the liquid. Normally it is in on/off mode, being regulated by the pressure of the argon gas above the liquid, which in turn is directly correlated to the liquid surface temperature.

The system H–H' consists of a separate small vacuum–insulated cryostat H' which is filled with LN_2. The liquid inlet H is controlled by the amount on LN_2 inside, the gas N_2 outlet is controlled by the pressure (and thus the temperature) of the LN_2. Two tubes connect the cryostat to a Copper bar C (dimensions 1.5" x 12" x 0.25") inside the liquid. Liquid N_2 flows down, evaporates, and gaseous N_2 flows back into the Cryostat H'. The lines to the copper bar C are vacuum insulated part of the way down, and then there is simple foam insulation (not shown in Figure 1) all the way to within 1" of the copper bar.

The "amplifiers" are mounted in sockets on a G–10 board which is mounted 1/2" off the copper bar. Instead of the real amplifiers, as they are being presently produced by the BNL group, we decided to use resistive circuits which, at a supply voltage of approximately 10 V, will produce the same distributed power dissipation as the actual amplifiers[2]. One can then vary the dissipated power by changing the supply voltage, and ensure that one has an adequate margin of safety before boiling starts. Figure 2 shows the layout to the resistors in a single "amplifier". The resistor values given are the nominal values at room temperature; inside the argon all resistances are approximately 2% higher. The power

consumption is also indicated; nearly half the power is consumed in a single resistor. The pads along the border are marked by their function in the original amplifiers. Two such circuits are mounted on a single 0.020" thick G–10 board of size 0.6" x 0.8". This is another difference to the real amplifiers, for which the substrate is ceramic. Thus our simulated "amplifiers" may produce a more concentrated heat source.

A mirror D, indicated in Figure 1, allows viewing of the amplifiers through a 6" diameter viewing window V in the cryostat top. A second window U allows light to shine in, and on occasion we used it for the flash when we took pictures of the boiling patterns inside.

We put platinum thermometers in many places (Degussa 01-GR210501). These are quite small (about 1 mm^3), and are each attached by thin wires to a small mounting board. Initially we had a set of 8 at 0.5" spacing near the liquid surface; these allowed us to measure the temperature distribution near the surface. Two are attached to the bottom plate under the mirror in Figure 1, at a depth of 36"; two are attached to the copper plate C, and there are some attached to the individual simulated amplifier boards. These thermometers are reproducible, and equal to each other, to within about 0.1K. The manufacturer claims that their absolute accuracy is better than 0.25K.

We also used heaters. One was attached to the bottom plate: it consists of a ring of resistors which will deliver 50W when connected to a 110V AC power line. We drive this heater through a Variac, so that we can vary the heater power from 0 to 80W. A second heater was installed at the liquid surface; we have used it to raise the surface temperature. However, we found that the easiest way to raise the surface temperature without disturbing the liquid was to add warm argon gas into the vessel; it requires only a very small amount of condensation to raise the surface temperature by a degree or more, without changing the temperature near the amplifiers.

III. TEMPERATURE DISTRIBUTION NEAR LIQUID SURFACE

As long as there is heat input from the top, there will be a natural positive temperature

gradient near the surface. Figure 3 illustrates this phenomenon. Initially the temperature throughout the cryostat was equalized by cooling with LN_2 in the top coil and heating with the heaters at the bottom. Violent boiling throughout the liquid creates an initial homogeneous temperature of 87.7K. Five minutes later the surface temperature has begun to rise, while the temperature deep down is unchanged. After another interval of 10 minutes the surface temperature has risen by another 2K, while the temperature at the bottom has still changed little. Most of the temperature variation occurs within 1" of the surface. We have also found that one can cool the liquid at the surface without starting any boiling, as long as one makes sure that the surface temperature does not drop below the bulk temperature of the liquid. Should this occur, violent boiling of the whole liquid again rapidly equalizes the temperature throughout.

IV . ONSET AND STOPPING OF BOILING

We have found that when one turns on the amplifiers at their design power of 70 mW/ amplifier (140 mW for the pair comprising one unit), no boiling occurs as long as the overall liquid does not boil; that is as long as the general ambient bulk temperature is no higher than the surface temperature. To study the temperature distribution in more detail we attached a thermometer to the back of the amplifier board, near the center of one of the simulated amplifiers.

By raising the generated power, one can produce boiling. We distinguish 4 different regimes:

1: No bubbles visible at all; the "no boiling" regime

2: A few bubbles, disappearing within 1 cm (1/2 inch) or less. Usually one sees 1–3 bubbles at a time.

3: A few more bubbles, some rising 1–2" before disappearing.

4: Boiling extends 3" or more above the amplifiers. In some cases bubbles rise all the way up to the surface which is 10" above the amplifiers.

It is difficult to measure the liquid temperature near the amplifier without perturbing the temperature distribution itself. The local temperature will depend on the orientation of the amplifier, the boiling (or nonboiling) regime, the heat produced by the amplifiers, and the past history. In Figures 4 and 5 we show a large hysteresis effect which strongly complicates any analysis. In this case the amplifiers were oriented vertically, with the copper bar behind them. The temperature was measured at the back of the amplifiers. For the data in Figure 4 there was an initial temperature difference of 2K between the surface and the copper bar. When turning on the current in the fake amplifiers, one finds that the local temperature rises with the heat generated. No boiling occurs until the thermometer indicates a temperature well above the surface temperature, which is near the LBT. Once boiling starts, the temperature settles down to a value very near the surface temperature. A further rise in the supplied power, or a reduction of power, hardly affect the liquid temperature near the amplifier. The boiling pattern, however, changes, and at the design power value of 70mW/amplifier the boiling has already stopped and the temperature is beginning to fall below the LBT value. We stress that the curves presented are essentially the same for several amplifiers tested. The exact power at which boiling starts, however, varies by about 20% from amplifier to amplifier. Indeed, even before boiling starts, one notices somewhat larger fluctuations in the local temperature.

For the measurements in Figure 5, the temperature throughout the liquid was initially equalized by cooling at the top and heating at the bottom. The surface temperature was then kept constant to $\pm$ 0.3K, while slowly rising power levels were applied to the amplifiers. At each new power, one waited for stabilization of the temperature. As can be seen from Figure 5, the temperature could rise by 3K without the liquid boiling. After a sudden onset of boiling, the temperature at the amplifier back drops to the surface temperature. When one then reduces the input power, the temperature stays the same, while the boiling becomes less and less strong. By the time the design power of 70mW/amplifier is reached, one sees only occasional bubbles which disappear within 1cm or so.

This general pattern was repeated for three different amplifier pairs. The only difference was the point where the transition to boiling occurred. Indeed, with one amplifier we never reached boiling up to a power level of 800mW.

V. TEMPERATURE ON AMPLIFIER SURFACE

The temperature measurements in the previous section were done by attaching a platinum thermometer at the back of the G–10 board holding the simulated amplifier. In a separate measurement, we have attached a thermometer both in front and in the back. The thermometer in front covers the resistor with the highest heat dissipation; thus its measured temperature lies between the actual resistor temperature and the liquid temperature right in front of the amplifier. Again one sees a large difference in behavior if there is boiling or no boiling. Figure 6 shows the temperature of the front thermometer when there is no boiling. Actually we are plotting the difference between the front thermometer temperature and the temperature near the surface for three different starting points ΔT^o. When one plots instead the difference between the front and back thermometer temperature, (Figure 7), one obtains a single curve which is independent of the surface temperature.

The situation is less clear and less reproducible once boiling starts. Both back and front thermometers indicate a temperature near the surface temperature. In Figure 8 we show the front temperature for several runs after inducing boiling by raising the power to high ($\geq 700mW$) levels. In one case ($\Delta T^o = 2.5K$) we never achieved a proper boiling pattern; there was little boiling and the temperature in front stayed high. In the other two runs the temperature in front collapsed to a value slightly above the surface temperature once the liquid started properly boiling. Whenever the initial temperature was below the surface temperature, no boiling was ever achieved at a power level $\leq$ 100mW/amplifier.

VI. OTHER TESTS DONE

As one brief test we mounted 26 amplifiers (13 pairs) next to each other so that they were nearly touching. It was then not possible to accommodate the platinum thermometers

nearby, and so there were no detailed measurements of temperature distributions on the amplifiers themselves. However, the general behavior was very similar: boiling started when the input power was around 600 mW/ amplifier and, once the liquid was boiling, one could reduce the power significantly and still see some bubbles near some of the amplifiers. Interestingly the liquid never boiled simultaneously at more than one amplifier or sometimes two widely separated amplifiers at a time. One can speculate that a horizontal liquid flow pattern develops which prevents simultaneous boiling at several neighboring amplifiers. In another test we mounted isolated amplifiers about 1cm above the copper bar, which was rotated by 90 degrees. We found that now the copper bar was completely ineffective in cooling the liquid at the amplifiers. Temperature gradient of several K could persist for long times at very low power dissipation, or even with the amplifiers completely turned off. This is evidence for the well-known phenomenon that LAr is an excellent heat insulator for a positive vertical temperature gradient, that is unless there is liquid convection.

VII. SUMMARY AND CONCLUSIONS

We have studied boiling in liquid argon under the influence of a highly localized heat source, such as a hybrid preamplifier. We have used a model where transistors were replaced by resistors, thus allowing us to vary the dissipated power over a wide range. We found that typical power dissipations of 70 mW/amplifier do not lead to boiling. Boiling can be produced by increasing the power by nearly one order of magnitude. There is a large hysteresis effect: the ambient liquid will heat up to well beyond its boiling point before boiling starts. Once boiling starts, the boiling pattern will persist to much lower levels of dissipated power, but except at the highest power levels any gas bubbles forming will rapidly be reabsorbed in the ambient liquid. Boiling stops when the ambient liquid temperature drops below the boiling point appropriate to the pressure in the liquid.

The boiling and non-boiling regimes have quite different temperature distributions near the amplifiers. These results show that no special precautions have to be made in

large LAr calorimeters if the amplifiers are mounted inside the liquid. While the dissipated heat of course has to be led away by cooling, there is no need to directly cool each amplifier.

ACKNOWLEDGEMENTS

This research was supported both by the National Science Foundation and by the Department of Energy.

REFERENCES AND FOOTNOTES

1. We wish to thank the Radeka Group at BNL for providing us with samples of their amplifiers.
2. We use thick film resistors (Dale series GRCW); their size is 0.063" wide and 0.126" long. Their layout on the board is such that each transistor or resistor of the original circuit consuming significant power has a simulating equivalent resistor on our board.

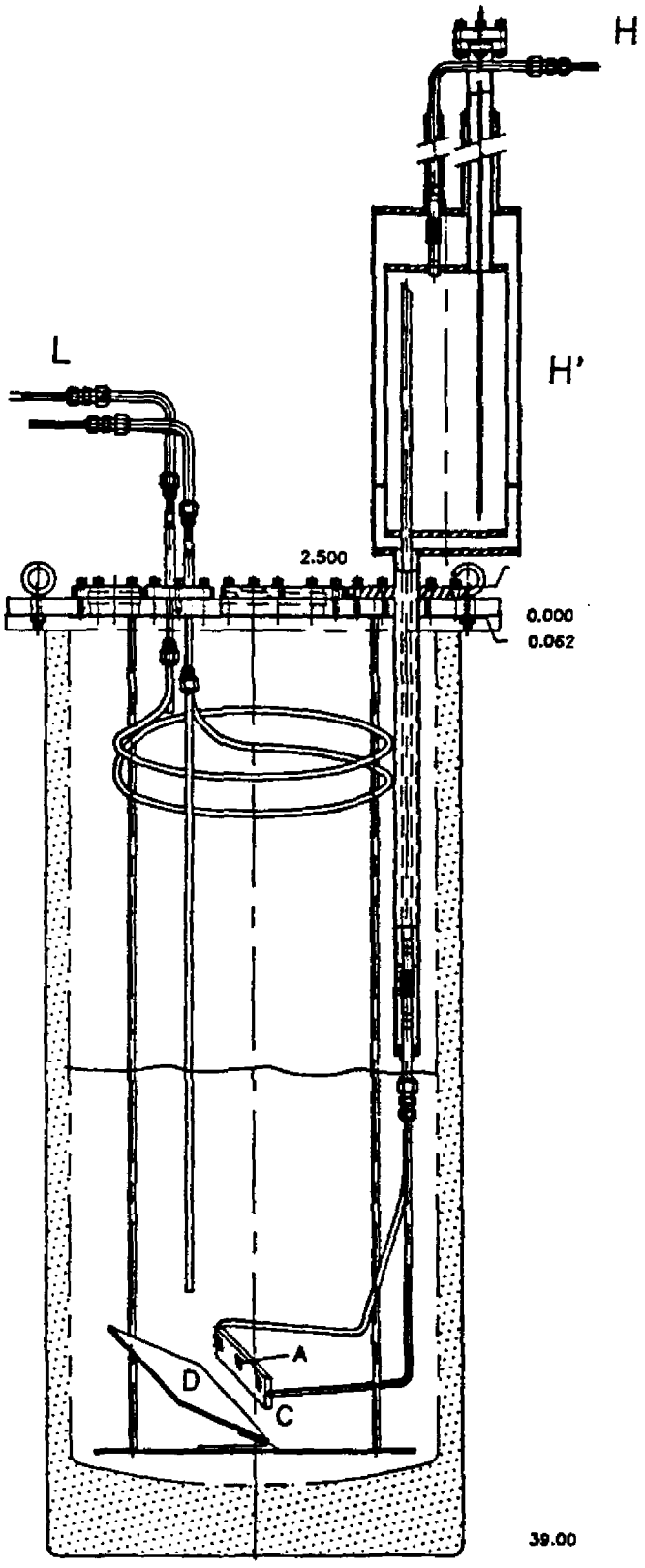

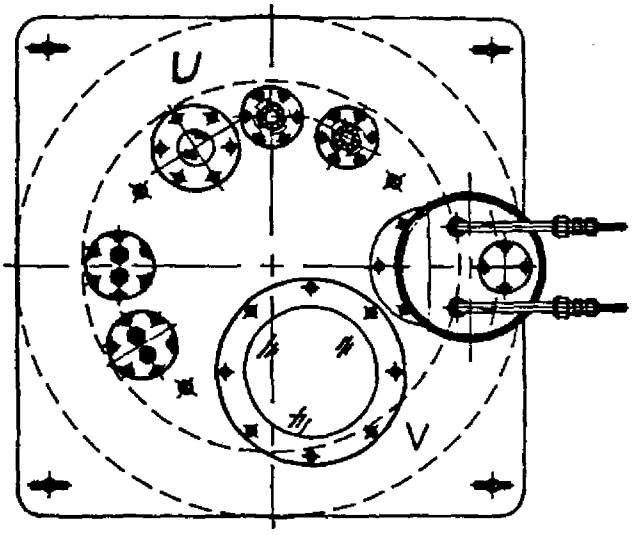

Figure 1: The test cryostat. The amplifiers A are mounted approximately 1/2" away from the copper bar C. A mirror D allows viewing the amplifiers through the port V. The low pressure cooling loop L cools the LAr surface; the copper bar C is cooled by pressurized LN_2 stored in the auxiliary cryostat H'.

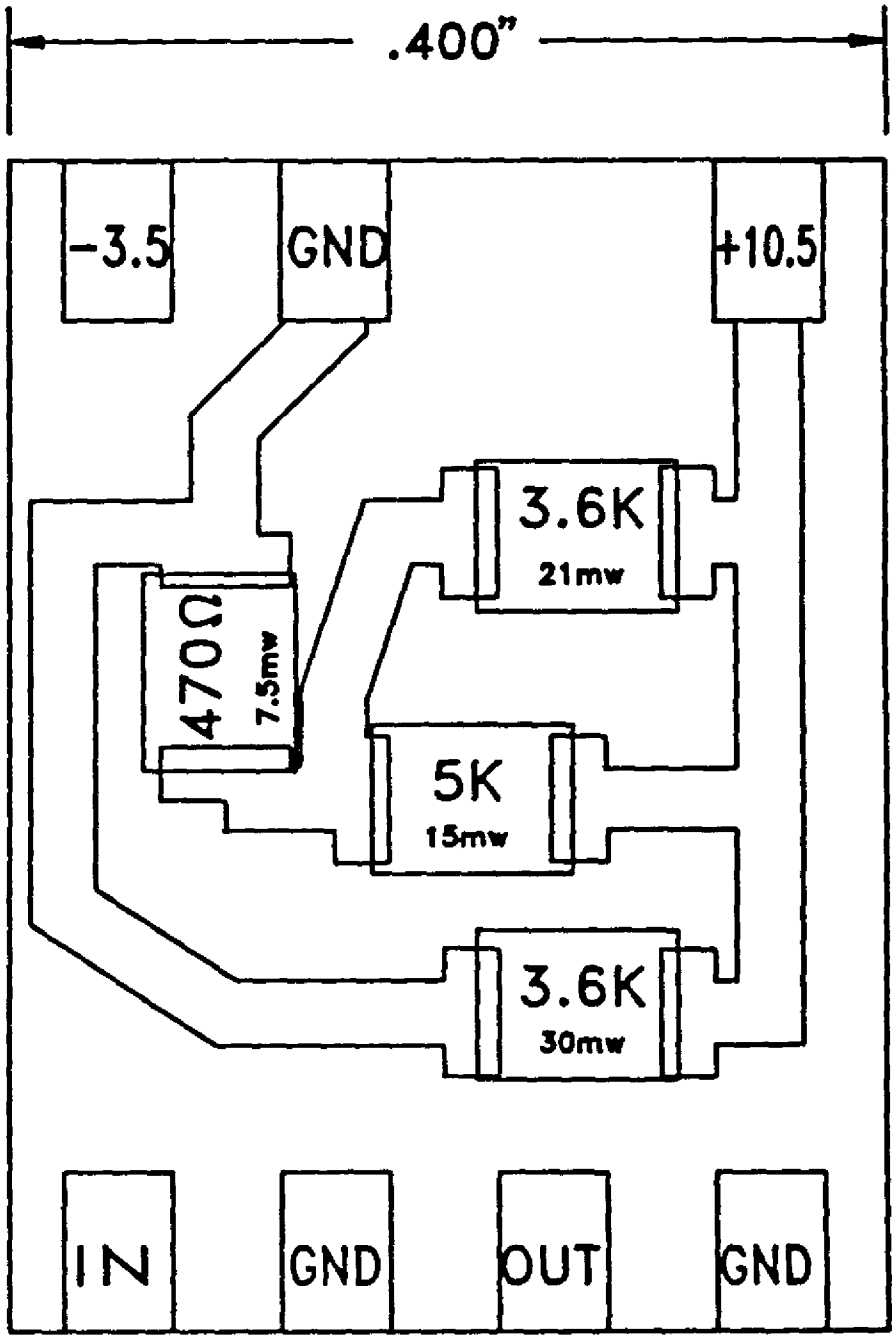

Figure 2: Scale layout of one simulated "amplifier". The resistance values at room temperature and nominal power dissipation at LN_2 temperature are indicated for each resistor.

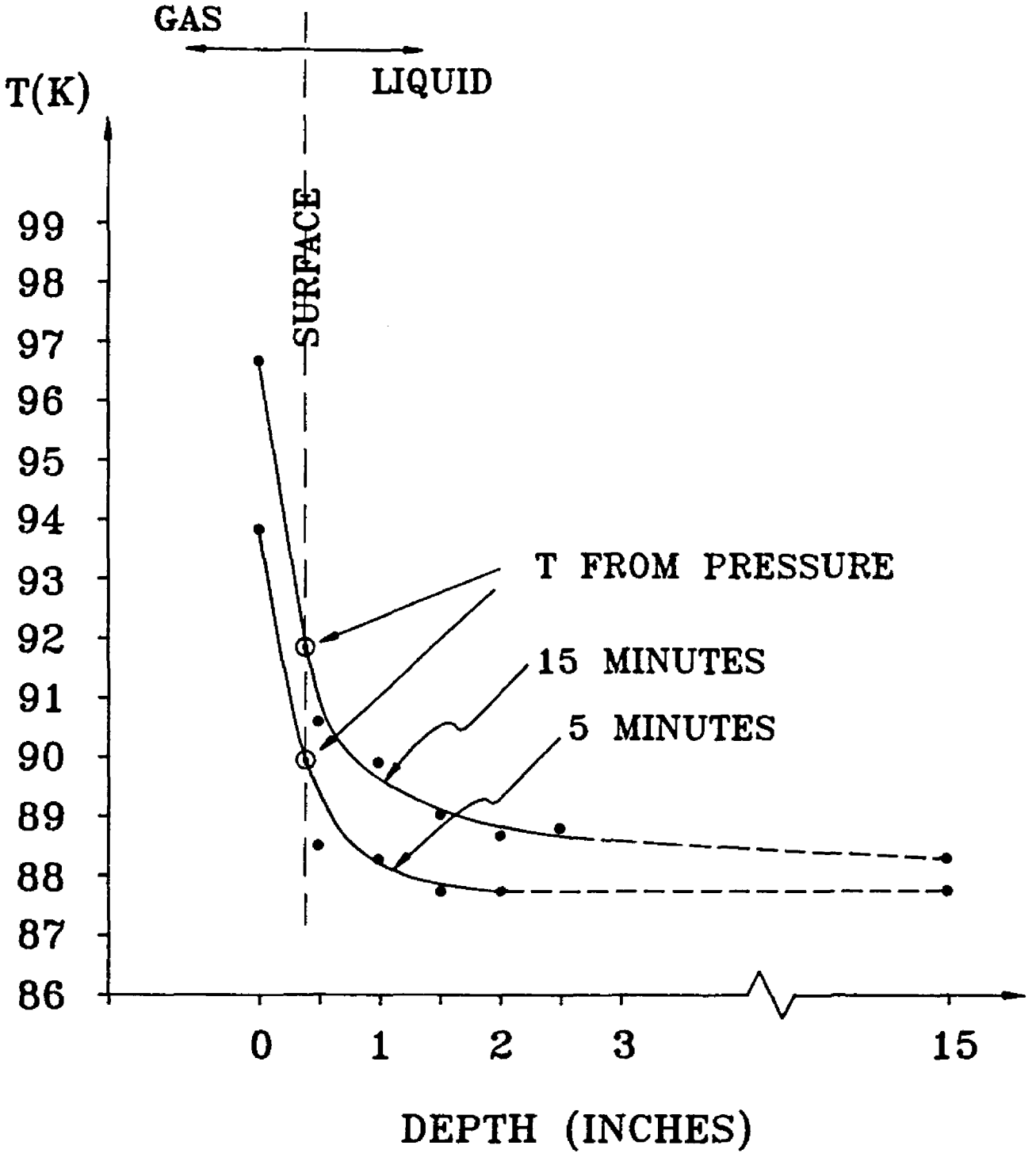

Figure 3: Temperature distribution near the LAr surface at 5 and 15 minutes after temperature was equalized throughout the liquid. Note the rapid rise of the surface temperature and the much slower change deep down.

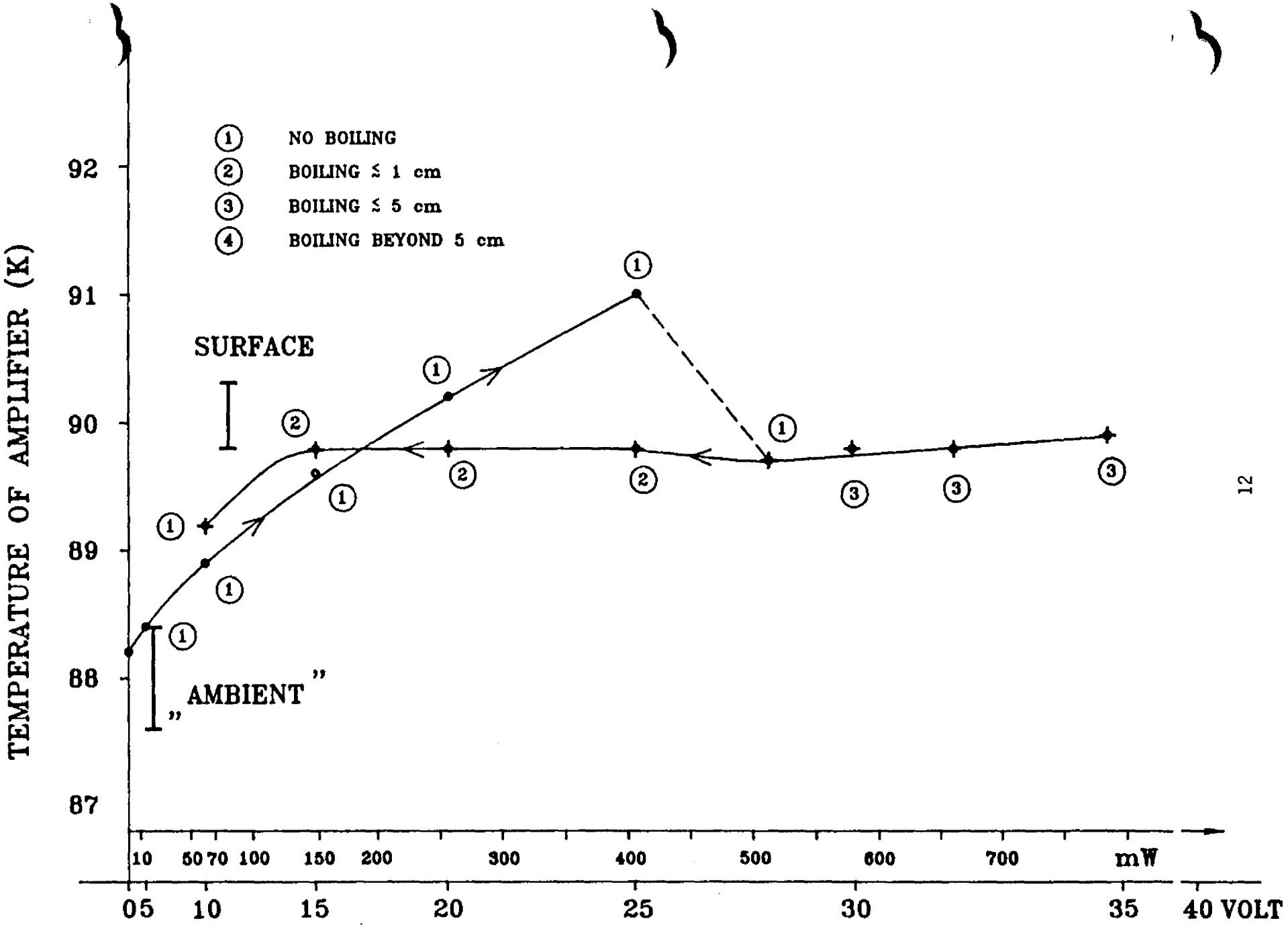

Figure 4: Temperature dependence of amplifier back side on power supplied to single "amplifiers". The power was raised to its maximum value and then again lowered. Note the approximately linear rise when no boiling occurs, and near constant temperature during boiling. The initial surface and ambient temperatures are indicated.

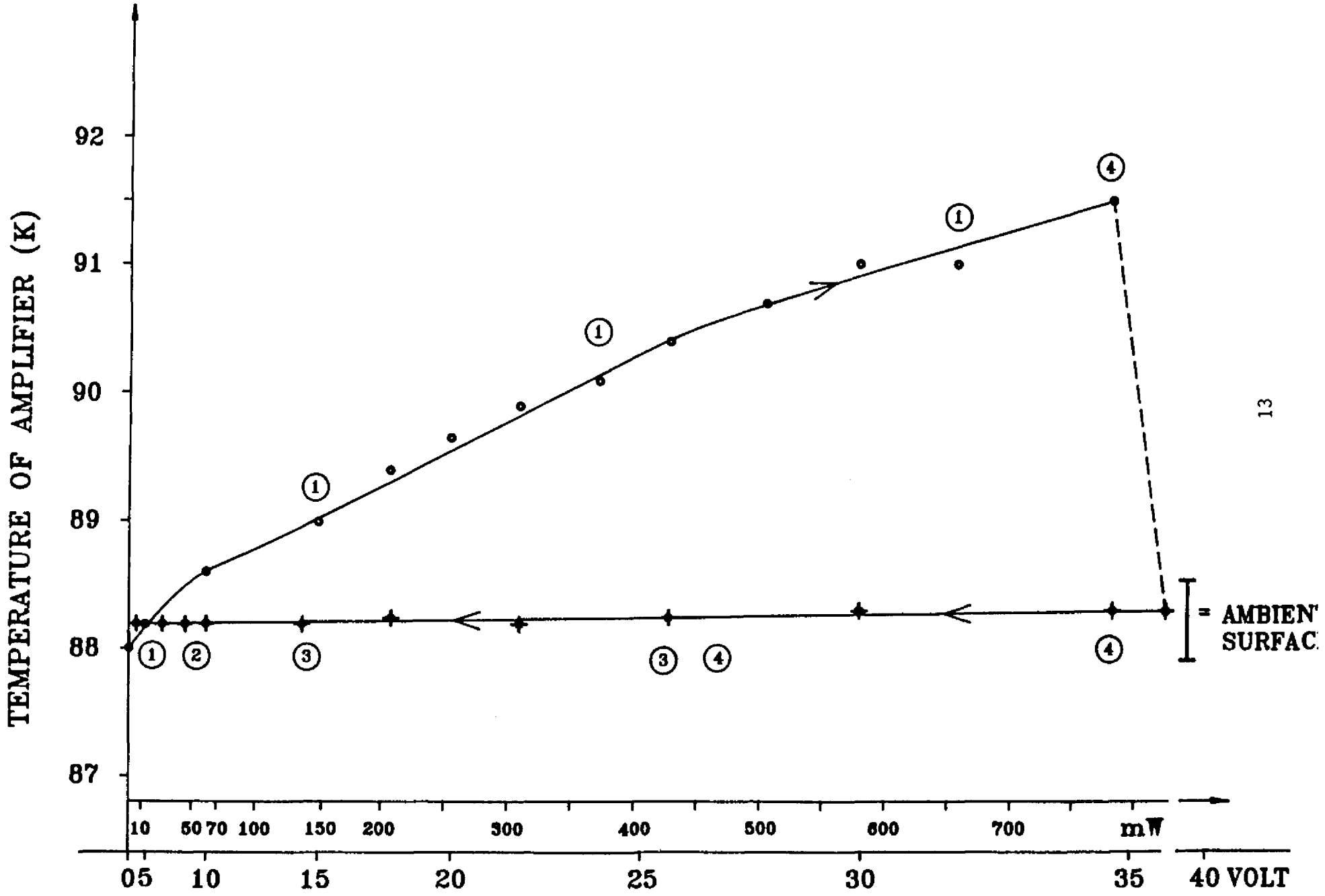

Figure 5: Same as Figure 4, except that initially the surface and ambient temperatures were equal.

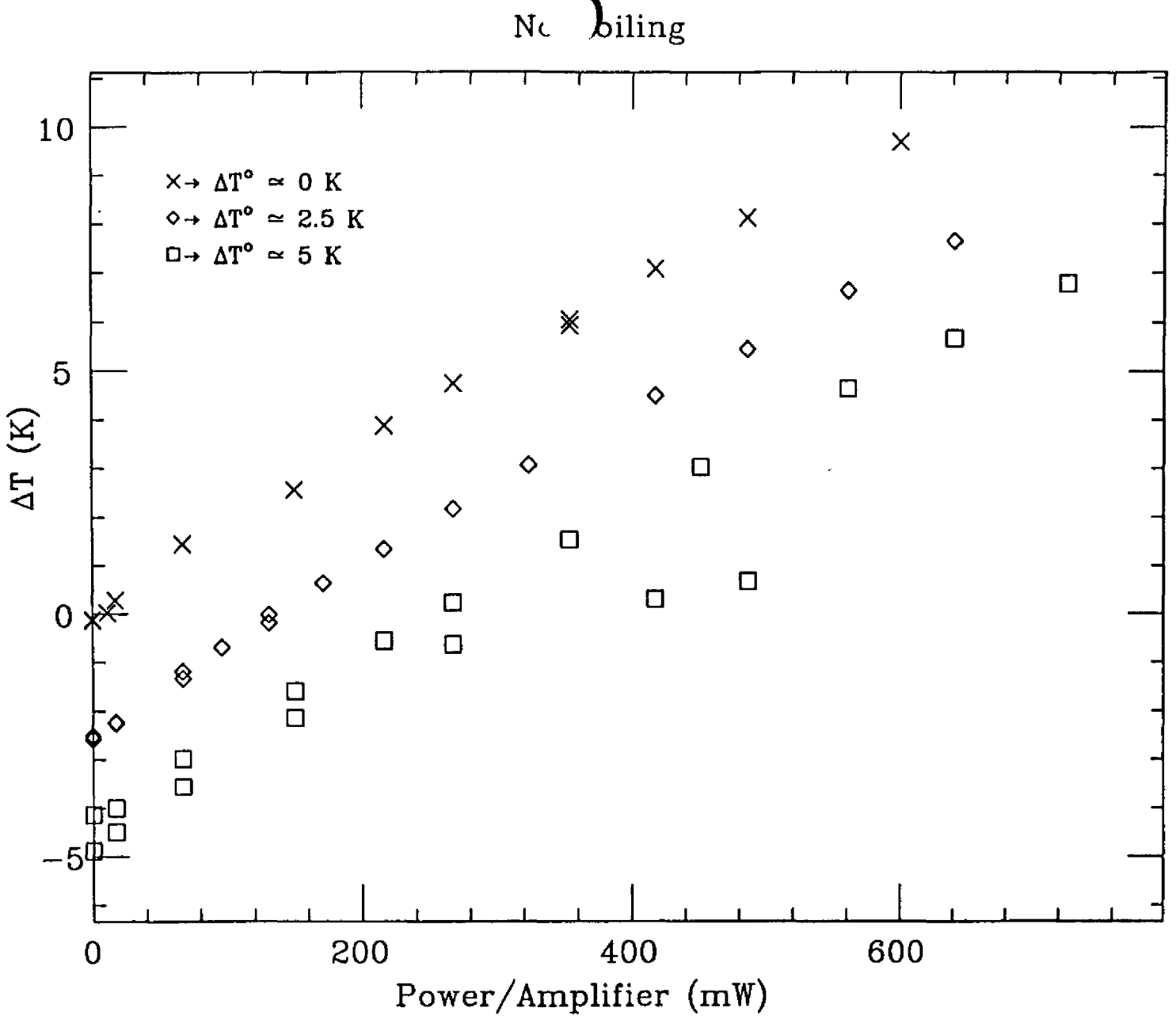

Figure 6: Temperature difference between a thermometer in front of an amplifier and one at the surface if there is no boiling. The three runs differ in the initial temperature difference ΔT^o.

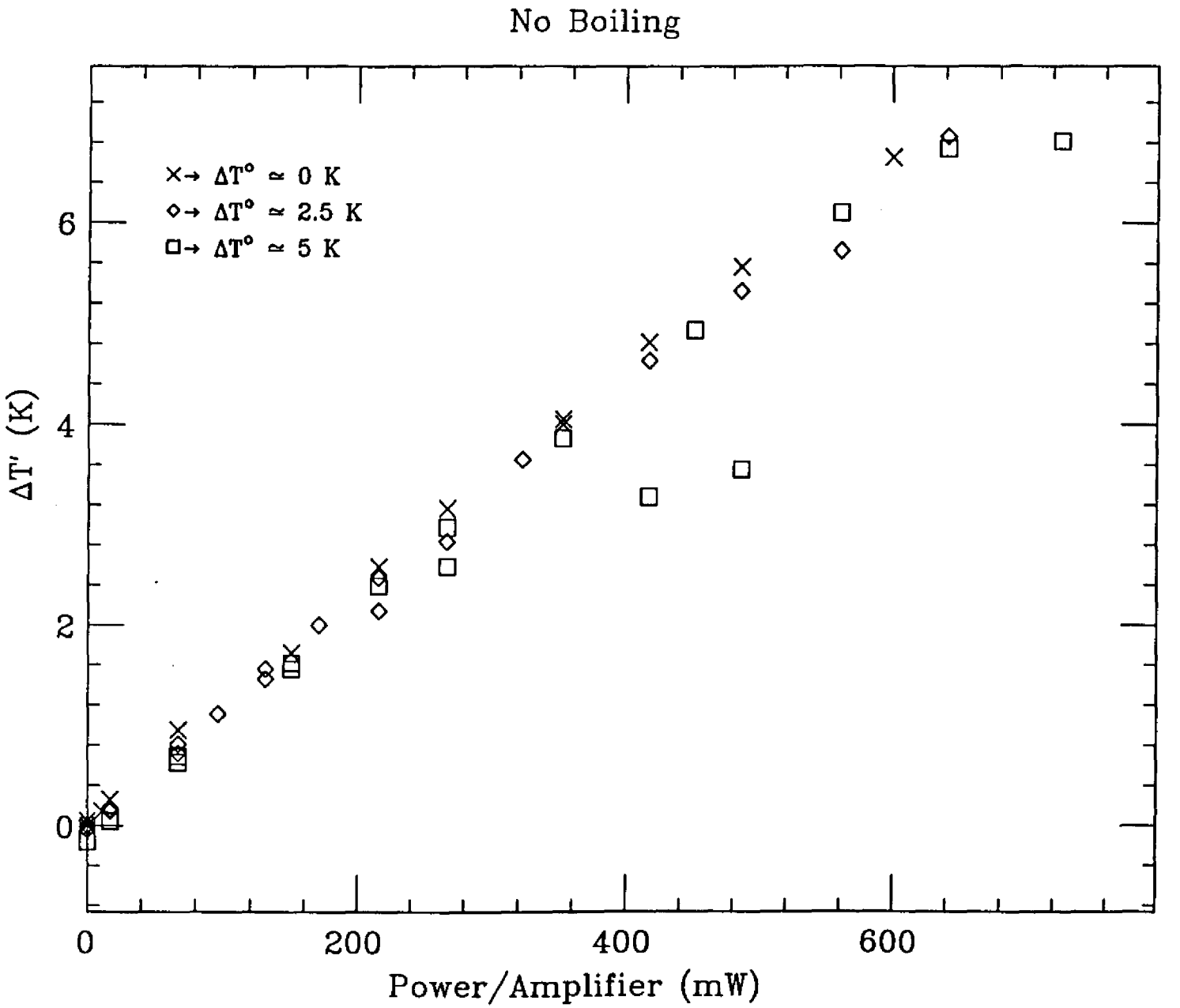

Figure 7: Temperature difference between front and back of amplifier if there is no boiling. The data points are from the same runs as shown in Figure 6.

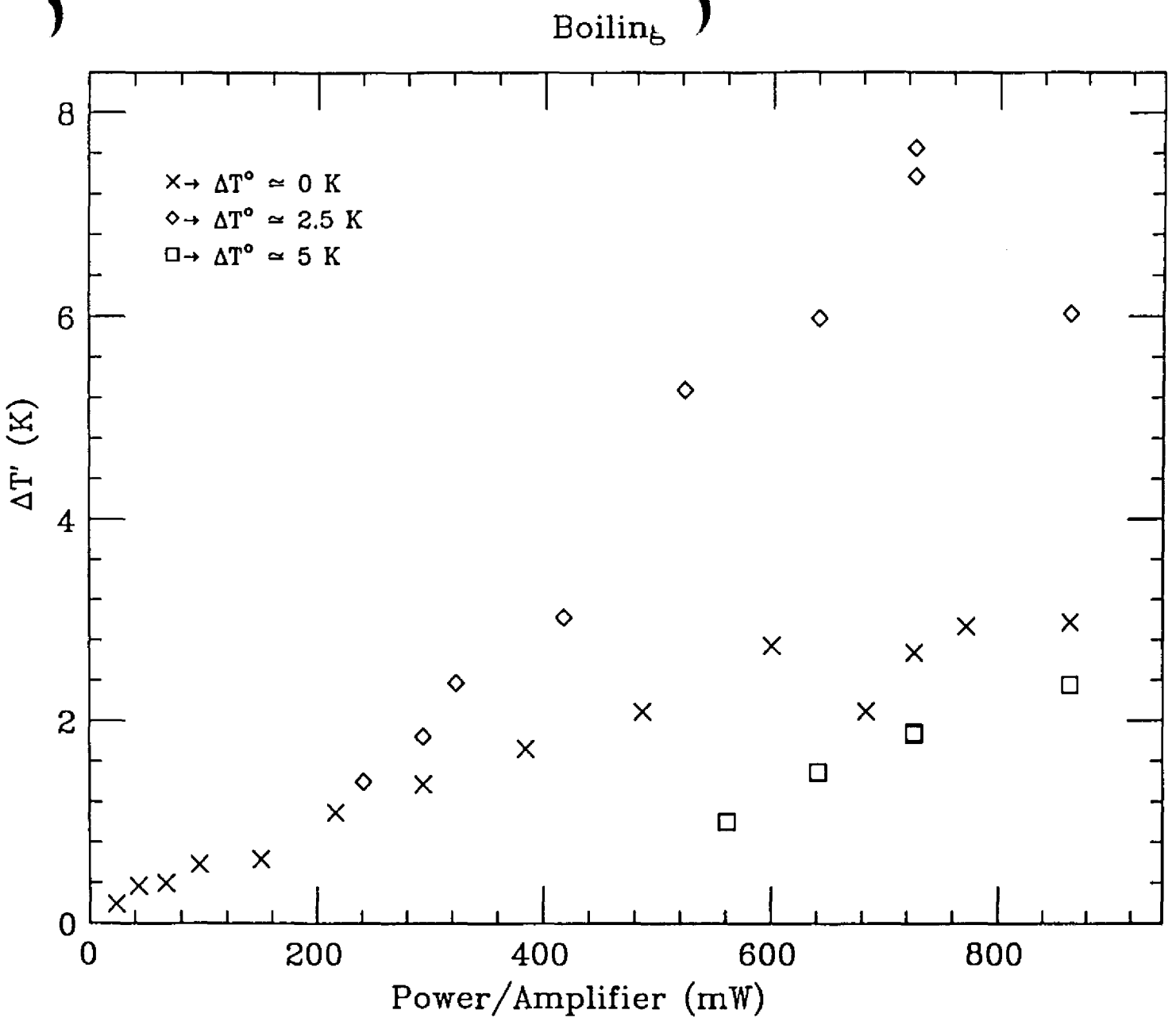

Figure 8: Temperature difference between front of amplifier and the liquid surface when there is boiling near the amplifier. For details see text.