SDC-91-00036

1992 BUDGET REQUEST FOR THE SOLENOIDAL DETECTOR COLLABORATION

19 November 1991

Summary

This document presents the budget request of the Solenoidal Detector Collaboration for 1992.

Contact person:

George H. Trilling, Spokesperson
50A-2160 Lawrence Berkeley Laboratory
Berkeley CA 94720
510/486-6801, Bitnet GHT@LBL

Members of the Solenoidal Detector Collaboration

Argonne National Laboratory: E. L. Berger, R. E. Blair, J. W. Dawson, T. L. Ekenberg, M. Derrick, T. H. Fields, V. Guarino, R. T. Hagstrom, N. F. Hill, P. K. Job, T. B. W. Kirk, E. N. May, J. Nasiatka, L. J. Nodulman, L. E. Price, J. Proudfoot, H. M. Spinka, R. L. Talaga, H.-J. Trost, D. G. Underwood, R. G. Wagner, A. B. Wicklund, W. M. Wu

University of Arizona: K. A. Johns

Institute for High Energy Physics, Beijing, China: Cui Huachuan, Gao Wenxiu, Huang Deqiang, Li Weiguo, Mao Huishun, Ni Huiling, Qi Nading, Wang Taijie, Yan Wuguang, Ye Minghan, Zhao Weiren, Zheng Linsheng, Zhou Yuehua

Beijing University, China: He Yu Ming, Lai Chu Xi, Liu Hong Tao, Liu Song Qiu, Lou Bing Qiao, Yang Ji Xiang, Yao Shu De, Zhang Re Ju

Brandeis University: S. Behrends, J. R. Bensinger, C. Blocker, P. Kesten, L. Kirsch

Bratislava State University, Czechoslovakia: P. Povinec, P. Strmen

University of Bristol: B. Foster, G. P. Heath

Brown University: D. Cutts, G. S. Gao, R. Partridge

Institute for Physics and Nuclear Engineering, Bucharest, Romania: A. Alexa, M. Horoi, D. Pantea, M. Pentia, C. Petrascu

California Institute of Technology: A. J. Weinstein

University of California at Davis: J. Gunion, D. Pellett, S. Mani

University of California at Irvine: A. Lankford

University of California at Los Angeles: K. Arisaka, H.-U. Bengtsson, C. Buchanan, D. Chrisman, D. Cline, J. Hauser, T. Muller, J. Park, D. Roberts, W. Slater

University of California at Riverside: J. Ellison, S. J. Wimpenny,

University of California at Santa Cruz: J. DeWitt D. Dorfan, C. Heusch, B. Hubbard, D. Hutchinson, A. L. Litke, W. Lockman, W. Nilsson, K. O'Shaughnessy, D. Pitzl, W. Rowe, H. Sadrozinski, A. Seiden, E. Spencer

Carleton University: J. Armitage, P. Estabrooks, S. Godfrey, M. O'Neill

Chiba University: H. Kawai

University of Chicago: C. Campagnari, M. Contreras, S. Eno, H. Frisch, C. Grosso-Pilcher, M. Miller, L. Rosenberg, H. Sanders, M. Shochet, G. Sullivan

University of Colorado: G. J. Baranko, H. W. K. Cheung, J. P. Cumalat, M. Daoudi, E. Erdos, W. T. Ford, D. Johnson, U. Nauenberg, P. Rankin, G. Schultz, V. Slonim, J. G. Smith

Joint Institute for Nuclear Research, Dubna: V. I. Astakhov, B. V. Batyunia, A. Bischoff, Y. A. Budagov, A. M. Chuenko, A. I. Dokshin, M. Finger, S. B. Gerasimov, V. M. Golovatyuk, Yu. N. Gotra, Yu. S. Gusar, Z. Guzik, D. I. Hubua, Yu. V. Ilyin, S. V. Kashigin, Y. N. Kharzheev, I. F. Kolpakov, A. D. Kovalenko, F. V. Levchanovsky, Y. F. Lomakin, A. I. Malakhov, E. A. Matyushevsky, A. A. Omelianenko, Yu. S. Pakhmutov, Y. A. Panebratsev, I. V. Puzynin, A. A. Semenov, A. E. Senner, A. V. Shabunov, V. T. Sidorov, A. N. Sinaev, A. N. Sissakian, V. A. Smirnov, T. Spassoff, E. N. Tsyganov, I. A. Tyapkin, L. A. Vasilyev, G. V. Velev, V. B. Vinogradov, A. S. Vodopianov, V. Vrba, Y. V. Zanevsky, N. I. Zhuravlev, N. I. Zimin, A. I. Zinchenko

Duke University: A. T. Goshaw, S. H. Oh, T. J. Phillips, W. J. Robertson, J. D. Simpkins, W. D. Walker

Erevan Institute of Physics, USSR: A. C. Amatuni, G. A. Vartgapetian

Fairfield University: D.R. Winn

Fermilab: V. H. Areti, M. Atac, E. Barsotti, L. Bartoszek, A. E. Baumbaugh, A. Beretvas, R. Bernstein, M. Binkley, A. D. Bross, A Byon, S. Cihangir, J. W. Cooper, B. Denby, K. G. Denisenko, N. L. Denisenko, T. Droege, D. P. Eartly, J. E. Elias, R. W. Fast; D. Finley, G. W. Foster, J. Freeman, I. Gaines, S. A. Gourlay, D. R. Green, J. Grimson, C. Grozis, S. R. Hahn, R. M. Harris, J. Hoff, J. Huth, J. Hylen, R. D. Kephart, J. Kilmer, D. Kim, H. J. Krebs, J. Kuzminski, A. Lee, P. J. Limon, F. Markley, P. S. Martin, A. Mukherjee, T. Nash, C. Newman-Holmes, A. Para, J. Patrick, R. Plunkett, E. E. Schmidt, S. L. Segler, R. P. Stanek, A. Stefanik, J. Strait, H. J. Stredde, S. Tkaczyk, R. Vidal, R. L. Wagner, R. H. Wands, R. Yarema, G. P. Yeh, J. Yoh, T. Zimmerman

University of Florida: R. Field, J. Harmon, J. Walker

Florida State University: M. Corden, J. H. Goldman, V. Hagopian, K. Johnson, H. Wahl, D. Xiao

Fukui University: M. Kawaguchi, H. Yoshida

Gomel State University, USSR: A. M. Dvornik, N. B. Maksimenko

Harvard University: G. Brandenburg, G. Feldman, M. Franklin, S. Geer, J. Konigsberg, J. Oliver, E. Sadowski, P. Schlabach, R. Wilson

University of Hawaii: C. Kenney, S. Parker

Hiroshima University: Y. Chiba, T. Ohsugi

Hiroshima Institute of Technology: M. Asai

Ibaraki College of Technology: M. Shioden

University of Illinois at Chicago: H. Goldberg, S. Margulies, J. Solomon

University of Illinois at Urbana: R. Downing, S. Errede, A. Gauthier, M. Haney, L. Holloway, I. Karliner, A. Liss, T. O'Halloran, J. Thaler, P. Sheldon, V. Simaitis, J. Wiss

Indiana University: D. Blockus, B. Brabson, A. Dzierba, R. Foster, G. Hanson, J. Li, X. Lou, F. Luehring B. Martin, T. Marshall, H. Ogren, D. Rust, E. Wente, A. Zieminski, D. Zieminski

Iowa State University: W. Anderson, J. Hauptman

Johns Hopkins University: J. A. Bagger, B. A. Barnett, B. J. Blumenfeld,P. H. Fisher

National Laboratory for High Energy Physics (KEK), Japan: F. Abe, K. Amako, Y. Arai, Y. Doi, H. Fujii, Y. Fukui, T. Haruyama, H. Ikeda, S. Inaba, T. Inagaki, H. Iwasaki, S. Kabe, N. Kanematsu, J. Kanzaki, T. Kondo, A. Maki, A. Manabe, M. Mishina, M. Noumachi, S. Odaka, K. Ogawa, T. K. Ohska, Y. Sakai, H. Sakamoto, O. Sasaki, T. Shinkawa, Y. Takaiwa, S. Terada, T. Tsuboyama, K. Tsukada, N. Ujiie, Y. Unno, Y. Watase, A. Yamamoto, Y. Yasu

Slovak Academy of Science, Košice, Czechoslovakia: F. Krivan, M. Seman, J. Špalek

Kyoto University: R. Kikuchi, K. Miyake

Lawrence Berkeley Laboratory: G. S. Abrams, H. Aihara, A. Barbaro-Galtieri, R. M. Barnett, C. J. Bebek, R. N. Cahn, C. A. Corradi, A. Dubois, P. H. Eberhard, W. R. Edwards, K. Einsweiler, T. Elioff, R. Ely, M. G. D. Gilchriese, D. E. Groom, C. Haber, C. Hearty, I. Hinchliffe, M. Hoff, R. Jared, R. W. Kadel, J. A. Kadyk, S. Kleinfelder, M. E. Levi, A. Lim S. C. Loken, N. Madden, Y. Y. Minamihara, O. Milgrome, J. Millaud, T. L. Moore, D. R. Nygren, E. Oberst, W. L. Pope, M. Pripstein, J. Rasson, M. Shapiro, D. Shuman, H. G. Spieler, R. Stone, M. Strovink, W. Thur, G. H. Trilling, R. C. Weidenbach, W. A. Wenzel

University of Liverpool: J. Bailey, G. A. Beck, J. B. Dainton, E. Gabathuler, S. J. Maxfield

Los Alamos National Laboratory: G. Dransfield, J. Hanlon, J. A. J. Matthews, F. Michaud, W. Miller, A. P. T. Palounek, R. Reid, C. Sadler, W. Sailor, R. Shea, H. Ziock

Louisiana State University: A. Fazely, R. Imlay, W. Metcalf

University of Manitoba: G. Smith

University of Maryland: A. R. Baden, A. H. Ball, C. Y. Chang, D. G. Fong, J. A. Goodman, N. J. Hadley, A. Jawahery, R. G. Kellogg, S. Kunori, A. Skuja, G. T. Zorn

McGill University: K. Ragan, D. G. Stairs

University of Michigan: D. Amidei, R. C. Ball, M. Campbell, J. Chapman, K. De, P. Derwent, H. R. Gustafson, K. Hashim, S. Hong, L. W. Jones, S. B. Kim, M. J. Longo, J. Mann, M. R. Marcin, H. A. Neal, D. Nitz, B. P. Roe, G. Snow, R. Thun, D. Wu, S. Zhang

University of Minnesota: P. Border, H. Courant, R. Gray, K. Heller, Y. Kubota, M. Marshak, E. Peterson, R. Poling, K. Ruddick

Academy of Science of BSSR, Minsk, USSR: J. A. Kulchitsky, L. G. Moroz

I.N.F.N., Milano: F. Manfredi, D Menasce, L. Moroni, D. Pedrini, V. Re, S. Sala, V. Speziali, A. Tommasini

University of Mississippi: D. Moore, D. Summers

Miyazaki University: T. Nakamura

Nagoya University: M. Nakamura, K. Niwa

Niigata University: K. Miyano, H. Miyata

Northeastern University: G. O. Alverson, W. L. Faissler, D. A. Garelick, M. J. Glaubman, A. Grimes, I. D. Leedom, C. D. Lirakis, J. H. Moromisato, E. L. Pothier, S. Reucroft, E. J. Saletan, L. Taylor, E. von Goeler

Northern Illinois University: J. Green, D. Hedin, D. Kaplan, S. Willis

University of Notre Dame: J. Bishop, N. Biswas, N. Cason, J. Godfrey, V. P. Kenney, J. Piekarz, R. Ruchti, W. Shepard

Oak Ridge National Laboratory: G. Alley, R. G. Alsmiller, Jr., F. S. Alsmiller, C. Y. Fu, C. W. Glover, J. Mahall, T. Ryan, D. Vandergriff

Ohio State University: B. Byslma, L. S. Durkin, T. Y. Ling, S. K. Park, T. A. Romanowski

Okayama University: N. Tamura

Osaka City University: T. Okusawa, T. Takahashi, Y. Teramoto, T. Yoshida

Osaka University: Y. Nagashima, S. Sugimoto

Centre for Research in Particle Physics, Ottawa: M. Dixit, M. Losty, H. Mes, G. Oakham

University of Oxford: J. Bibby, R. J. Cashmore, N. Harnew, R. Nickerson, W. Williams

University of Pennsylvania: L. Gladney, R. J. Hollebeek, M. Newcomer, R. Van Berg, H. H. Williams

Pennsylvania State University: T. A. Armstrong, K. W. Hartman, A. Hasan, S. F. Heppelmann, R. A. Lewis, E. D. Minor, B. Y. Oh, G. A. Smith, W. S. Toothacker, J. Whitmore, Y. Zhang

University of Pisa: R. Amendolia, F. Bedeschi, G. Bellettini, S. Galeotti, H. Grassman, M. Mangano, A. Menzione, G. Pauletta, D. Passuello, G. Punzi, L. Ristori

University of Pittsburgh: E. E. Engels, Jr., T. Humanic, P. F. Shepard

Purdue University: V. E. Barnes, A. Bujack, D.D. Carmony, A. F. Garfinkel, L.J. Gutay, D. S. Koltick, A. T. Laasanen, R. McIlwain, D. H. Miller, E. Shibata, I. P. Shipsey, B.C. Stringfellow

Rice University: D. Adams, S. Ahmad, B. Bonner, M. Corcoran, H. Miettinen, G. Mutchler, J. Roberts, J. Skeens

University of Rochester: A. Bodek, P. De Barbaro, S. Kanda, F. Lobkowicz, W. Sakumoto, A. Sill, P. Slattery

Rockefeller University: G. Appolinari, N. Giokaris, D. Goulianos, P. Melese, R. Rusack, A. Vacchi, S. White

Rutgers University: T. Devlin, T. Watts

Rutherford Appleton Laboratory: M. Edwards, N. Gee, G. Grayer

CEN Saclay, France: E. Beuville, J. C. Brisson, P. Bonamy, J. Ernwein, O. Gachelin, R. Hubbard, P. Le Du, F. Rondeaux, B. Thooris, G. Villet

Saga University: A. Murakami, S. Kobayashi

Saitama College of Health: K. Masuda

Sofia State University, Bulgaria: R. V. Tsenov, A. B. Iordanov

Superconducting Super Collider Laboratory: D. Bintinger, D. Coupal, A. Fry, T. Fukui, H. Johnstad T. Pal, J. Siegrist, M. Turcotte

Institute of Nuclear Physics, Tashkent, USSR: S. Aliev, S. Kan, A. Khaneles, A. Pak, E. Surin, B. Yuldashev

Physical Technical Institute, Tashkent, USSR: M. Alimov, K. Gulamov, V. Kaprior, V. Myalkovski, K. Turdaliev, A. Yuldashev

Institute of High Energy Physics, Tbilisi State University, USSR: N. S. Amaglobely, B. G. Chiladze, D. I. Hubua, R. G. Salukvade

Tel Aviv University: J. Grunhaus, R. Heifetz, A. Levy

Texas A&M University: E. Barasch, T. Bowcock, F. R. Huson, P. M. McIntyre, J. T. White

University of Texas at Arlington: S.P. Rosen, A. White

University of Texas at Dallas: C. D. Cantrell, R. C. Chaney, E. J. Fenyves, H. Hammack, N. P. Johnson, W. B. Lowery, J. Orgeron

Tohoku Gakuin University: M. Higuchi, Y. Hoshi

Tohoku University: K. Abe, K. Hasegawa, H. Yuta

University of Tokyo (Institute for Nuclear Study): S. Kato, K. Nishikawa, S. Homma, T. Miyachi

Tokyo Institute of Technology: K. Kaneyuki, T. Tanimori, Y. Watanabe

Tokyo Metropolitan University: M. Chiba, R. Hamatsu, T. Hirose

Tokyo University of Agriculture and Technology: T. Emura, K. Takahashi

University of Toronto: D. C. Bailey, G. J. Luste, J. F. Martin, R. S. Orr, J. D. Prentice, P. Sinervo, T-S. Yoon

Triumf Laboratory: R. Henderson, M. Salomon

University of Tsukuba (Institute of Physics): I. Fujiwara, Y. Funayama, K. Hara, T. Iinuma, T. Kaneko, S. Kim, K. Kondo, S. Miyashita, Y. Morita, I. Nakano, M. Takano, K. Takikawa, K. Yasuoka

University of Tsukuba (Institute of Applied Physics): Y. Asano, S. Mori, Y. Takada

Tufts University: T. Kafka, W. A. Mann, R. H. Milburn, A. Napier, K. Sliwa

Virginia Polytechnic Institute and State University: B. Lu, L. W. Mo, T. A. Nunamaker, L. E. Piilonen

Wakayama Medical College: M. Daigo

University of Washington: R. J. Davisson, G. Liang, H. J. Lubatti, R. J. Wilkes, T. Zhao

University of Wisconsin: J. Bellinger, D. Carlsmith, J. Cherwinka, A. Erwin, F. Feyzi, C. Foudas, J. Lackey, R. Loveless, G. Ott, D. D. Reeder, W. Smith, C. Wendt, S. L. Wu

Yale University: P. Cushman, S.R. Hou, V. Singh, J. Slaughter

York University: W. R. Frisken, D. Hasell, R. Koniuk

Other collaborators involved in the SDC proposal preparation:

Draper Laboratory: E. Berk, J. Garman, J. Govignon, R. Martorana, M.E. Womble

IBM FSD Team:

Dallas Marketing Center: W. Courtney, S. Fisher
Houston Laboratory: A. Elam, E. Poole
Manassas Laboratory: C. Caprio, P. Kapcio
Owego Laboratory: B. Buddle, T. Gerace

Space Sciences Laboratory, University of California at Berkeley: J. F. Arens, J. G. Jernigan

Hughes Electro-optical & Data Systems Group and Hughes Technology Center: G. Atlas, O. Barkan, T. Collins, G. Kramer, C. Pfeiffer, B. Wheeler, D. Wolfe, S. Worley

Martin Marietta Strategic Systems: T. Adams, J. Bakken, B. G. Guenterberg, J. Pohlen

Quantum Research Services, Inc.: W. L. Dunn, S. K. Myers, F. O'Foghludha, A. M. Yacout

Rockwell International Corporation: E. J. Anderson, M. D. Petroff

RTK Engineering: J. Brown, L. Dittert, W. McGinley, A. Nunez, M. Riddle

Silicon Dynamics Inc.: D. Klokow, L. VanderHave

Stanford Linear Accelerator Center: S. L. Shapiro

Westinghouse Science and Technology Center: M. A. Burke, C. W. Einolf, D. T. Hackworth, D. Marschik, D. W. Scherbarth, R. L. Swensrud, J. M. Toms

Table of Contents

1. Introduction . . . 1
2. Progress since the Letter of Intent . . . 2
3. Description of the SDC detector . . . 4
   3.1 Tracking . . . 4
   3.2 Solenoid . . . 4
   3.3 Calorimetry . . . 4
   3.4 Muon system . . . 4
   3.5 Forward calorimetry . . . 4
4. Overview of FY1992 R&D and engineering plan . . . 9
   4.1 Overview of goals for detector subsystems . . . 9
      4.1.1 Tracking system . . . 9
      4.1.2 Superconducting solenoid . . . 12
      4.1.3 Calorimeter system . . . 12
      4.1.4 Muon system . . . 13
      4.1.5 Electronics systems . . . 14
      4.1.6 Computing . . . 14
   4.2 Project management and systems integration . . . 14
   4.3 Summary of budget request . . . 15
5. Tracking system . . . 17
   5.1 System Description . . . 17
   5.2 Silicon subsystem . . . 17
      5.2.1 Electronics . . . 18
      5.2.2 Mechanical engineering . . . 19
      5.2.3 Detector program . . . 20
      5.2.4 Pixel R&D . . . 21
   5.3 Outer tracker . . . 23
      5.3.1 Straw tube systems . . . 23
      5.3.2 Scintillating fiber systems . . . 26
      5.3.3 R&D for gaseous intermediate angle tracking . . . 29
      5.3.4 Outer tracker engineering plan . . . 30
6. Superconducting solenoid . . . 34
   6.1 FY1990 and FY1991 R&D . . . 34
   6.2 FY1992 R&D plans . . . 35
7. Calorimeter . . . 36
   7.1 Choices of technology for calorimetry . . . 36
      7.1.1 Choice of technologies for central calorimetry . . . 36
      7.1.2 Choice of technologies for forward calorimetry . . . 36
   7.2 Central calorimetry—scintillator option . . . 36
      7.2.1 R&D for the scintillator option . . . 37
      7.2.2 Prototype development and engineering . . . 39
      7.2.3 Engineering for SMD . . . 40
   7.3 R&D for forward calorimetry . . . 40
      7.3.1 Forward calorimeter progress in FY1991 and plans for FY1992 . . . 41

8. Muon system 44
8.1 Introduction 44
8.2 Chamber program 44
8.2.1 Drift tube 45
8.2.2 Oriented cell 45
8.2.3 Jet cell 46
8.2.4 Chamber development in FY1991 47
8.2.5 Chamber development plans for FY1992 47
8.3 Trigger counters 47
8.4 Support and alignment system 48
8.5 Magnet design 49
8.5.1 Barrel toroid 49
8.5.2 Barrel magnet coils 49
8.5.3 Magnet support 49
8.5.4 Forward toroids 49
8.6 Supertower prototype 50
8.6.1 Stage 1—Rail system to hold outer supertower 50
8.6.2 Stage 2—Full, 3 layer, supertower test bed 50
8.7 Test beam program 51
8.7.1 Measurements of low-energy debris accompanying high energy muons 51
8.7.2 Measurements of low-energy neutrons from hadronic interactions . . 51
9. Electronics system 52
9.1 R&D Plan for front-end electronics 52
9.1.1 Wire chambers (straw tubes and muon chambers) 53
9.1.2 Calorimeter electronics 53
9.1.3 Scintillating fiber tracker readout 54
9.1.4 Shower maximum detector readout 54
9.2 Data acquisition (DAQ) system 54
9.2.1 Current status of SDC DAQ activities 54
9.2.2 Overview of DAQ R&D and engineering plan 55
9.2.3 Areas of DAQ R&D needed in FY1992 56
9.2.4 Areas of DAQ engineering needed in FY1992 57
9.3 Trigger system 58
9.3.1 Trigger R&D status 58
9.3.2 Calorimeter trigger development in FY1992 59
9.3.3 Central tracker trigger development in FY1992 60
9.3.4 Muon trigger trigger development in FY1992 61
9.3.5 Silicon strips 61
9.3.6 Trigger systems engineering 62
10. Computing systems 65
11. Project management and detector integration 67

1. Introduction

This document is the 1992 Research and Development and Engineering Plan for the Solenoidal Detector Collaboration(SDC). The detector proposed by the SDC is a general-purpose detector aimed at pursuing a broad range of physics goals at the SSC. The Solenoidal Detector Collaboration presently consists of about 700 physicists and engineers from about 100 institutions in the United States, Japan, the Soviet Union, the United Kingdom, France, Italy, Canada, the Peoples Republic of China, Bulgaria, Czechoslovakia, Romania, and Israel. In addition, the SDC is being aided by collaborators from IBM, Hughes Aircraft, Rockwell International Corporation, Kaiser Engineering, Martin-Marietta Corporation, Quantum Research Services, RTK Engineering, Silicon Dynamics, Inc., the Westinghouse Science and Technology Center, and Draper Laboratories

In early January 1991, the SDC was approved to develop a Technical Proposal. During the last months, the SDC has been working vigorously to better define the parameters of the detector, to carry out critical R&D activities, to develop conceptual engineering designs of most of the major detector subsystem, to compile much more detailed cost and schedule estimates and to develop the organization of the collaboration. These activities have been supported by resources internal to the collaboration, monies from the Large Subsystem R&D Program administered by the SSCL, funding from the TNRLC, and direct support of the SDC administered by the SSCL.

In FY1992 we must continue or complete vital R&D work on all of the major components of the SDC detector. Furthermore, we must accelerate the pace of engineering design of the components and expand our efforts in systems integration. The design of the experimental facilities to house and support the detector is proceeding in parallel with the detector R&D and design. We must provide detailed requirements for these designs to keep pace with the schedule for facilities design. A baseline cost and schedule must be completed and will undergo extensive review during FY1992. All of these activities will be supported by resources internal to the collaboration and by funds administered by the SSCL.

This document contains a brief description of progress since the submittal of the Letter of Intent (LoI), very brief summaries of progress in all aspects of the detector and almost equally brief descriptions of the R&D and engineering required in FY1992 to meet our goal of initiating construction in FY1993. We are requesting a total of $19.9M from the SSCL to support R&D and engineering in FY1992. In addition, there will be substantial support from outside the US for work ongoing in non-US countries. The scope of this work is described in this document, but not the funding requests from the non-US countries.

2. Progress since the Letter of Intent

Since the submission of the LoI there has been intensive activity in all areas of detector R&D and engineering design, with full collaboration meetings every $1\frac{1}{2}$ months augmented by a large number of specialized meetings focused on specific subsystems. We summarize below some of the main developments:

1. The Collaboration has expanded significantly with the addition of groups from Iowa State University, Los Alamos National Laboratory, Louisiana State University, Northeastern University, Northern Illinois University, Yale University, and TRIUMF Laboratory (Canada). Applications from groups in Brazil, Poland, Montreal, and from the Universities of Kansas and Oklahoma are in process. We are expecting more applicants both from the US and from abroad. We have also had interactions with some of the Soviet groups formerly in the EMPACT/TEXAS Collaboration and are hopeful that many of their members will join us.
2. An improved costing process has been implemented. A new cost estimate based on an updated detector design is being prepared, and used to develop a cost-optimized detector scope for the preparation of the technical proposal.
3. Facilities integration efforts have involved close cooperation among the SSCL experimental facilities group, some members of the Conventional Construction Division, and the SDC facilities integration group. A major focus has been the design of the underground hall, and particularly the determination of its size, mode of construction, and location. Important detector considerations have included physical size, requirements for assembly and disassembly, space for electronics located in the hall, and requirements for the various facilities. At the same time hall construction issues such as cost, time to construct, feasibility of the needed span dimension, depth, *etc.* were also taken into account. Recent efforts have focused on the design of the surface facilities.
4. Detector integration efforts have focused on issues of access, placement and quantity of on-detector electronics, provision of space for cables, cryogenics and other facilities, procedures for assembly and disassembly, design of supports for the steel structure and for the various subsystems, *etc.* Considerations of ease of access to the calorimeter, tracking and inner muon chambers have led to some modifications of the toroid steel geometry from that shown in the LoI. This will be evident in the figures of the next section. A general design concept for the construction and assembly of the central iron toroids has been chosen after careful review of various possible design directions, and a full conceptual design is being prepared.

We now move to progress in the subsystems:

5. *Central tracking system*: Appropriate tolerances for both the silicon and the outer tracking have been developed. For the silicon system there has been development of the support structure, cabling arrangements, and cooling system. The optimized detector configuration is under study, including strip length and stereo angle, with a final decision to be based on an evaluation of performance, technical risk, cost, maintainability, reliability, and safety. Newly fabricated double-sided silicon detectors (DSSD) are being subjected to radiation damage studies.
6. *Outer tracking*: R&D is continuing on both straw tube and scintillating fiber technologies. Beam tests are being prepared for both technologies. Bench tests with fibers and VLPC's indicate good photoelectron yield and attenuation lengths of about 6 m for scintillating fibers and 8 m for fiber waveguides. Engineering work on support structures for both straws and fibers, including stereo elements, is in progress. The general support concept based on thin continuous cylinders is common to both technologies. Procedures for assembly and alignment are under development. We will substantially narrow options for the tracking system by February 1, 1992. The intermediate region tracker design is still very much under study. To cope with SDC design luminosity, scintillating fiber and gas microstrip systems look like potential candidates, but substantial R&D, especially for the latter case, is required.
7. *Solenoid magnet*: R&D and design is a collaborative effort between FNAL and KEK. The development of superconductor satisfying the strength and resistivity requirements has been successful, and fabrication of full-size superconducting cable is in process. Design efforts on thin vacuum shells, the cryogenic chimney, the coil supports, the required cryogenics, and calculations of the effects of iron geometry on coil forces are all proceeding.

8. *Calorimetry*: The option of scintillating tile with wavelength shifting-fiber readout has been selected for the central calorimetry. The relative amounts of lead and iron absorber in the hadronic section are still to be determined by December. In preparation for these decisions, simulation studies have been done or are in progress to study the physics impact of particular choices of depth, e/h, segmentation, shower maximum detector granularity *etc.* At the same time, beam tests of various modules are either under way or about to start. These include electromagnetic lead/scintillator modules, an iron/scintillator hadronic prototype, and a scintillator test calorimeter specially designed to study the e/h impact of various choices of absorbers. There are also extensive studies of radiation damage in scintillator/lead modules at various electron linac facilities (Beijing, KEK, Kharkhov, Orsay), coupled with analyses of how to calibrate and correct for localized damage in the EM compartment. Forward calorimetry poses special challenges of its own, and the SDC has set up a task force to better define the requirements, to evaluate the candidate technologies, and to set up a process for reducing the present options to the point of making a specific choice.

9. *Muon systems*: The evolution of the design for the iron toroids has been discussed earlier. The development of the muon tracking chambers is now the object of increasing R&D effort. This program includes the determination of an optimal arrangement of wire orientations to fulfill momentum resolution and trigger goals while minimizing cost, the study and evaluation of various drift chamber structures, and the study of alignment and support issues. Prototype chambers are now being constructed. Prototype designs for the barrel chambers will be evaluated by February 1, 1992 and a single design selected by that date. A beam test is about to run at FNAL to determine the properties of charged particles accompanying muons emerging from absorbers, and to determine the efficiency of muon track reconstruction.

10. *Electronics*: There is continuing progress in the R&D on individual components, and increased effort in the development of complete system designs including all front ends, trigger, and data acquisition. The integration activity has focused on physical layout, and interfaces between electronics systems as well as between mechanical and electronics systems. Choices between alternative design concepts, based on flexibility, performance, and cost, will be made toward the end of calendar 1991.

The above list, while far short of presenting all recent SDC activities, does provide an indication of the substantial level of effort under way as the collaboration heads toward the preparation of its Technical Proposal.

3. Description of the SDC Detector

The design of the SDC detector has evolved substantially in detail since submission of the LoI.

An isometric view of the present SDC detector concept is shown in Fig. 1. A quadrant view is shown in Fig. 2 and an end view in Fig. 3. Fig. 4 shows a blowup of the central tracking and calorimetry.

We compare the present design with that presented in the LoI:

3.1. Tracking

The scope of silicon system has been reduced by about a factor two in area from that described in the LoI. The outer tracking in the barrel region will be either a straw tube array, a scintillating fiber array or a combination of the two. The intermediate tracking system shown here consists of three modules of gas microstrip chambers at each end.

The design of the tracking system is under intense review. By November, the number of options will be reduced, with a selection of the option(s) for the Technical Proposal to be made by February 1, 1992.

3.2. Solenoid

The magnet is unchanged from the LoI version, as is the tracking volume.

3.3. Calorimetry

The shape of the tile/fiber calorimeter differs somewhat from that shown in the LoI in being more oval and less rectangular. The depth of calorimeter has been reduced to 9λ at $|\eta| = 0$. The granularity and sampling ratios are all under intense study in preparation for a final selection of the configuration of the hadronic absorber by December.

3.4. Muon system

A significant change has been made in the iron toroids. In contrast to the LoI version, there is an 84 cm radial gap between the central toroid and the forward toroids, and the central toroid has been lengthened. This change, made to allow relatively easy access to the calorimeter and tracking system without the necessity of moving some 5000 tons of forward toroid, was incorporated after study of several alternative access schemes. There has also been some rearrangement of muon tracking chambers, partially motivated by the toroid modifications and by cost. The number of layers in the barrel region has been reduced by about 35% from the LoI.

3.5. Forward calorimetry

The forward calorimeter has been shifted inward to avoid interference with the first quadrupole during large-scale disassembly in which the forward toroids are moved out. The technology for the forward calorimetry has not been selected.

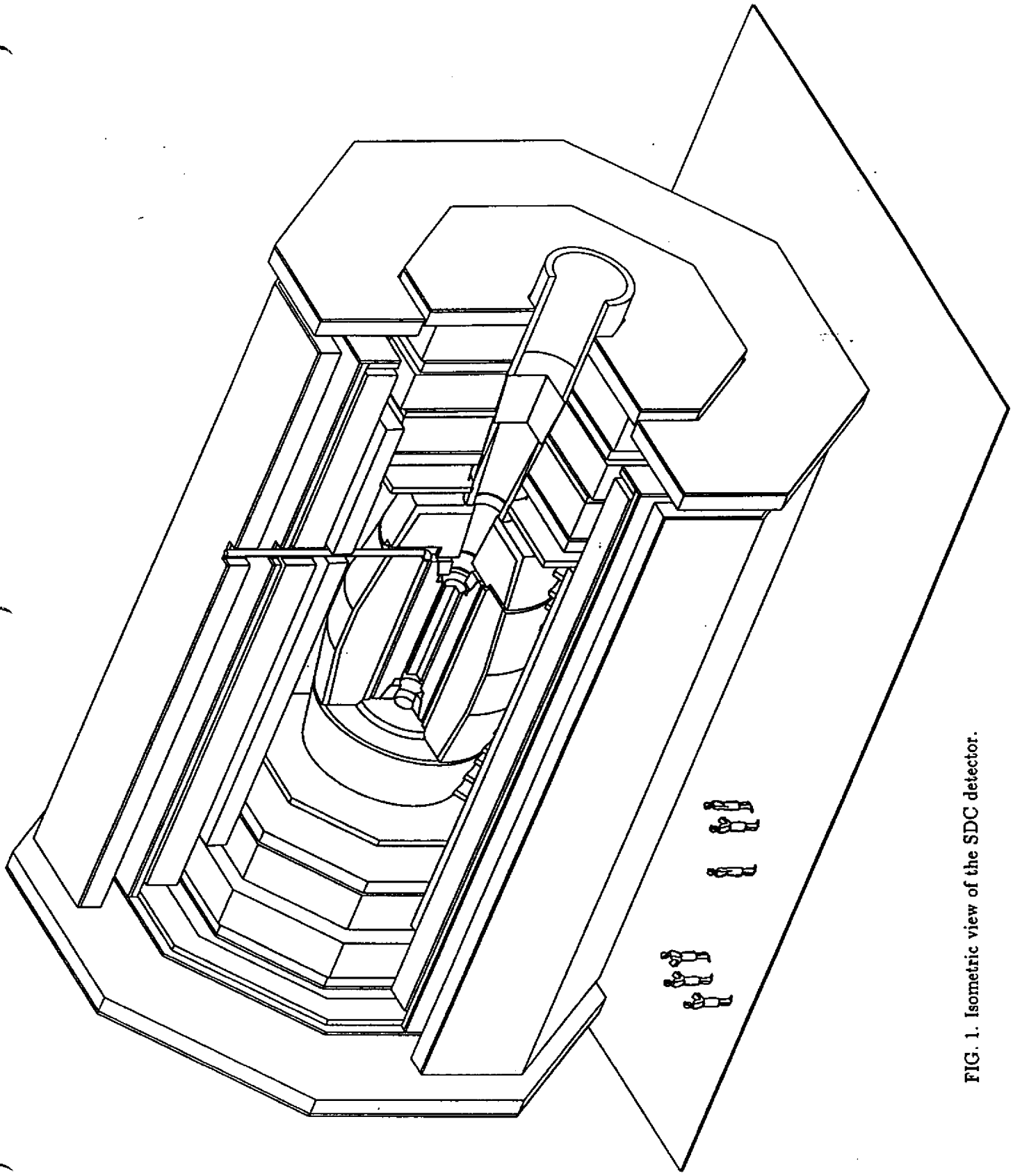

FIG. 1. Isometric view of the SDC detector.

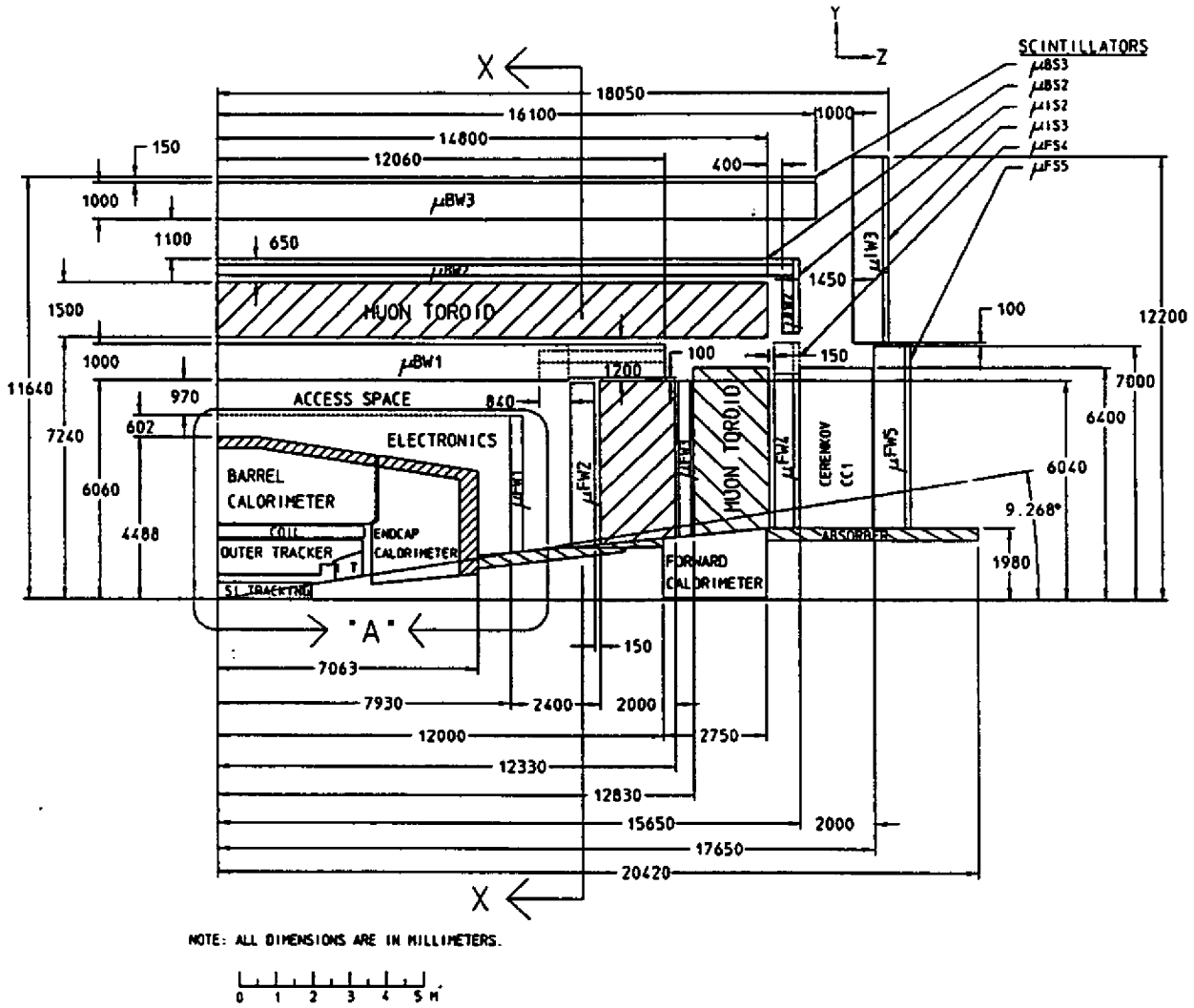

FIG. 2. Quadrant view of the SDC detector with the scintillating-tile/WLS-fiber option.

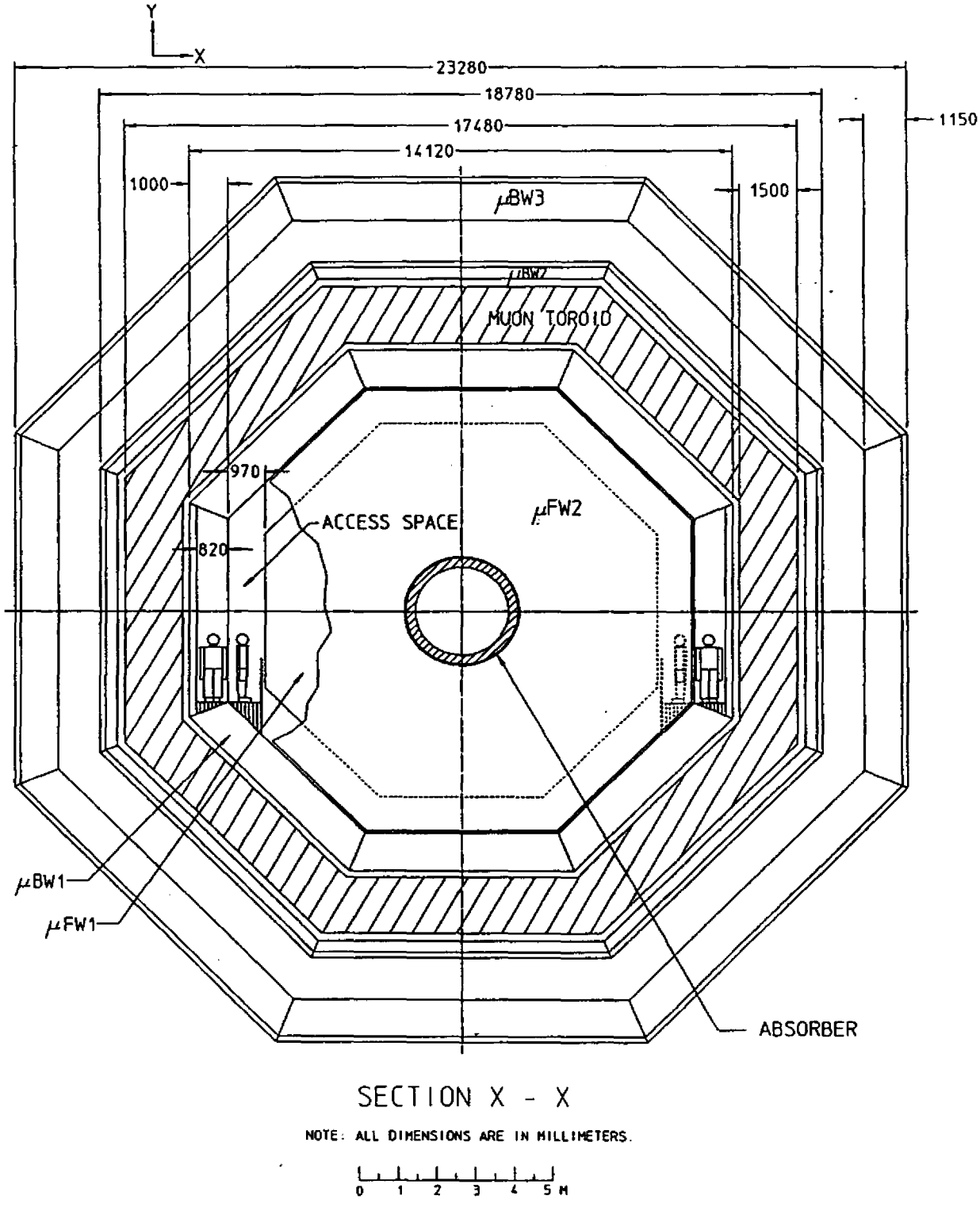

FIG. 3. End view of the SDC detector.

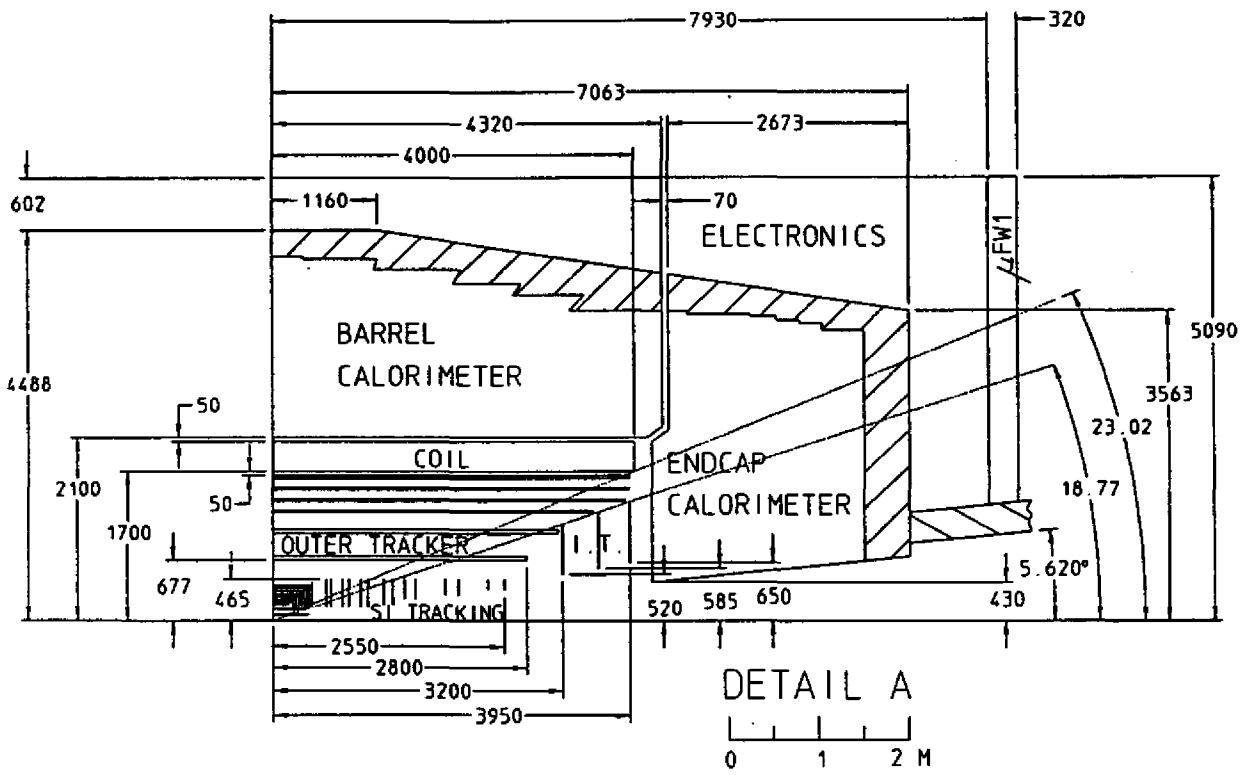

FIG. 4. Detail of the quadrant view of the central tracking and calorimetry of the SDC detector with the scintillating-tile/WLS fiber option.

4. Overview of FY1992 R&D and engineering plans

By October 1992 we must have completed the following:

- preparation of a detailed Technical Proposal describing a conceptual design for our detector
- preparation of a detailed cost estimate and schedule
- extensive review of the detector design and cost by the SSCL, the PAC, the DOE, and others
- completion of most of the basic or proof-of-principle R&D leading to choices of technology or design directions
- sufficient conceptual and preliminary engineering design as a basis for assessing performance, developing cost, and allowing the rapid build-up of resources required to begin construction in FY1993
- organization of the collaboration to manage the construction of the detector

The 1992 R&D and Engineering Plan has been developed to meet all of these goals. In the sections below we briefly summarize the critical R&D needs, engineering plans for detector subsystems, the engineering needs to integrate the subsystems into a coherent detector and resources required to develop and defend a detailed cost and schedule. The US budget request for FY1992 is summarized at the end of this section.

4.1. Overview of goals for detector subsystems

The major subsystems in the detector are the tracking system, the calorimetry, the superconducting solenoid, the muon system, the electronics systems and the computing. The major R&D and engineering goals in FY1992 for each of these are briefly described below.

4.1.1. Tracking system

The tracking system consists of two major components: an inner silicon tracker, possibly including a pixel section at the innermost radius, and an outer tracker. The outer tracker is further divided into a barrel section and an intermediate section.

Silicon tracking system

The silicon tracking system will have either pixel or strip detectors for radii less than 10 cm and strip detectors outside this radius. We are evaluating the cost and benefits of the pixel detector and will reach a decision regarding its inclusion in the Technical Proposal by November 1991. The silicon tracking system is the critical element in pattern recognition for all tracks, has the ability to fully reconstruct tracks within jets of p_t up to about 1 TeV/c, and provides secondary vertex detection capability.

The major accomplishments in the last year for the silicon strip part of the detector include:

- demonstration that double-sided detectors will function properly up to doses of 10^{14} particles per cm^2, or about the equivalent of 20 years at a radius of 15 cm at the design luminosity
- demonstration that bipolar and radiation-hardened CMOS electronics will function for the same fluence as above
- preliminary demonstration of a working wick-cooled ring
- substantial progress on the conceptual design of the mechanical structure, including finite-element calculations showing that tolerance goals can be met
- construction of a mechanical prototype of a detector module that satisfies rigidity and other requirements
- completion of a detailed, though preliminary, cost and schedule estimate

In FY1992, R&D is required to develop the front-end electronics, data acquisition and trigger circuitry. A prototype front-end chain of circuitry must be complete and ready for test by the end of FY1992 since exhaustive tests, including radiation studies, are required to validate the design. The cabling and packaging for electronics and detectors require a substantial engineering effort in FY1992. In the mechanical arena, a full-scale prototype of a barrel region superlayer section will be constructed to verify design concepts and structural stability. Optical techniques developed to measure the stability will be used in the final production process. Since butane is used as an evaporative cooling fluid, a full safety analysis must be completed. Materials compatibility studies will continue. Most of the design effort to date has focussed on the barrel region. In FY1992 the design work for support, alignment, and cooling of the forward disks should begin in earnest.

Progress has also been made in the development of the pixel detector. Test integrated circuits to read out single pixel cells and arrays have been fabricated. The results of these tests will lead to the development of new chips this summer. More advanced designs are being pursued, but have not been implemented yet in silicon. These more sophisticated architectures will be needed in the eventual detector.

Unfortunately, because of the limited funds allocated to SDC efforts, it is not possible to support the pixel detector R&D in FY1992 through these funds. The SDC hopes that such continued support through generic R&D funds will be possible. Assuming that continuing pixel detector R&D can be supported, the SDC can later have the option of replacing, in the inner layers, the strip detectors by pixel detectors, provided such replacement can be justified in terms of cost and performance considerations.

Outer tracker

At the present time, the outer tracker is divided into a barrel region and an intermediate tracker. In the barrel region, the techniques being considered are straw tubes, scintillating fibers, or a combination of the two. In the intermediate region, scintillating fibers and gas microstrip detectors are possibilities.

Work on straw tubes is at an advanced stage of conceptual design, but important R&D is still required. Testing of straw tubes of 4 mm diameter and 4 m length for efficiency, stability and timing characteristics is necessary. The design concept for fiber tracking is currently being developed. Important beam tests at FNAL are planned to confirm proof-of-principle. Essential R&D is required to develop large scale fiber manufacture, provide for further optimization of VLPC's including their cryogenic support and control, and develop appropriate placement and registration techniques for the fabrication of cylindrical layers for the central region and disks for the intermediate region. Work on gas microstrips is directed toward proof-of-principle, with the goals of demonstrating both stable, long-term operation and the ability to detect minimum ionizing particles with good efficiency.

Barrel tracker

The barrel tracker provides Level 1 and Level 2 triggers for high p_t charged particles, and, in combination with the silicon tracker, high precision measurements of momenta. The barrel tracker must provide a precise point at the outermost radius of the tracking volume to obtain the best momentum measurement accuracy. It must also have one or more superlayers instrumented to provide a prompt Level 1 trigger on stiff tracks. The number of layers required for pattern recognition, in conjunction with the silicon, is still under study. The relative cost and pattern recognition capability of the overall tracking system depend in turn on the number of silicon and outer tracking elements. We plan to complete this optimization study by November 1991.

There are two technologies under consideration for the barrel tracker: straw drift tubes of about 4 mm diameter arrayed into superlayers, and scintillating fibers of about 0.85 mm diameter, also in superlayer arrays. While we are also considering designs which combine the two technologies, cost considerations strongly indicate the desirability of selecting a single technology for the barrel tracker to minimize the engineering design and prototype construction efforts, which represent a substantial fraction of the total cost. We intend to complete a preliminary review of options by November 1991 with a final selection to follow by February 1992.

Two different approaches are being pursued for mounting the straws in superlayers. In one approach the straws are contained in thin self-supporting modules that are then located precisely on a thin support cylinder. Two modules, each about 4 m in length, would be needed to cover the 8 m axial length of the tracking volume. In the other approach, individual straws or straw bundles are constructed and the wire tension is held by stiff end rings, in turn supported by thin cylinders. In this case each straw covers the full 8 m length, but has a mid-tube terminator that electrically decouples its two halves.

Modules of one foot length have been constructed and tested. A 1 m long prototype is under construction and is being evaluated. Of particular interest is the accuracy of location of the straws, which can only be evaluated in a prototype. A 4 m prototype is in the planning stage and should be completed early in FY1992. For the single or bundled straw approach, 3 m long stacks that meet tolerances have been constructed by hand. A preliminary review of these two approaches was made in May, and further review will occur in November. A selection of the design approach will be made before large prototype construction is initiated in FY1992. In either case the major goals in FY1992 will be to design and initiate construction of a full-scale prototype

of about 2000 tubes and to complete a preliminary engineering design of the support structure.

Studies of intermediate wire supports, gas properties, radiation-induced aging, attenuation lengths, wire termination, and electronics connections are mostly common to either approach for mounting the straws. Attenuation lengths of about 6 m have been demonstrated. In FY1992 these studies will continue to optimize the thin conductive coating on the cathodes of the tubes. Wire supports are required about every meter in either approach. Prototype supports have been fabricated and methods for wire insertion with the supports in place have been demonstrated. In FY1992 studies of mass production techniques to accommodate to the intermediate supports will begin. Good efficiency and resolution have been obtained with CF_4/isobutane mixtures and detailed aging studies are in process. In the final tracker, low-mass terminations, gas connections and connection to front-end circuitry must be realized. This work began in the last half of FY1991 and must continue in FY1992.

In the fiber option, scintillating fibers with lengths up to 4 m would be precisely located on support cylinders. Each scintillating fiber would be joined to a clear fiber that transmits the light outside of the tracking volume to photodetectors located on the back of the central calorimeter. The solid state photodetectors, Visible Light Photon Counters (VLPC's), have a quantum efficiency of about 85% and operate at about 7° K. Recent tests of a 4 m fiber (mirrored at the end) coupled to a 4 m clear fiber readout by a VLPC have detected 4–5 photoelectrons from ^{207}Bi and ^{106}Ru sources.

Larger scale-tests have been initiated. A 16-channel array is ready for bench tests, and a 96-channel prototype will be undergoing beam tests at FNAL. In addition, work to develop a complete conceptual design for the VLPC system, including cryogenics and preamplifiers, has been initiated in collaboration with the Rockwell Corporation, the manufacturer of the VLPC's. This first conceptual design will be available by December 1991, and will include a cost estimate for the system. Very preliminary indications are that the cost per channel of VLPC system, including preamplifier, will be \$20–\$25 in large quantities.

The work plan for the fiber option in FY1992 also includes a significant component of fundamental R&D on the scintillating and clear fibers to increase the light yield. In addition, fiber manufacturing engineering must be completed both to produce the large amount of fiber with consistent quality and to understand how to produce fiber ribbons that have the proper pitch and precision. Additional conceptual engineering is required to develop the tooling and means to precisely lay fibers or ribbons onto support cylinders and to preserve the registration of the fibers within layers and, equally important, between layers on the same support structure. The structure must not only provide the needed precision and strength but be light-tight as well. Methods of making removable connections between the scintillating fibers and the clear fibers must also be studied.

If the fiber option is selected, design and fabrication of a prototype system, including large arrays of VLPC's would be initiated. A prototype system of about 1000 fibers would be completed in early FY1993 and be available for extensive tests.

Intermediate tracker

The intermediate tracker covers the pseudorapidity region $1.8 < |\eta| < 2.5$. The precise boundary between the intermediate tracker and the barrel tracker remains to be determined. The intermediate tracker is essential for the provision of a Level 1 electron trigger in the intermediate region and is also used in the higher level triggers. In conjunction with the silicon tracker it provides tracking capability and extends the lever arm for momentum resolution in this region.

While the general goals of the intermediate tracker are well understood, the implementation in a particular technology has not yet been decided. The scale of the intermediate tracker is such that additional R&D and design are possible through at least 1992 before a decision must be made on the technology. Candidate technologies are scintillating fibers and gas microstrip detectors.

Groups in the United Kingdom, Canada and the United States are considering gas microstrip or similar techniques for the intermediate region. While the promise is great, substantial fundamental R&D must be done to determine the basic feasibility of the technique. In addition, some conceptual engineering design must also be done to determine if these devices can be employed at reasonable cost even if the fundamental R&D proves successful. Our goals are to establish the basic "proof-of-principle" for microstrip detectors and to complete sufficient

engineering design by the end of 1992 to assess the viability of the technique.

The R&D required to develop an intermediate-angle fiber tracker is identical in almost all respects to that required for the barrel region. In addition, a conceptual design must be developed for laying fibers in a space-filling spiral or other patterns suitable for the intermediate region. Furthermore, the trigger requirements for this region must be assessed carefully and be reflected in the mechanical design.

4.1.2. Superconducting solenoid

The responsibility for the superconducting solenoid is shared between Japan and the United States.

There has already been substantial progress in developing a high-strength, aluminum-stabilized conductor in Japan. Coil winding tests are underway in Japan under contract with Toshiba. In the US there has been development of preliminary concepts for a thin-walled vacuum vessel, for the chimney carrying the cryogenic lines, for support of the coil by the calorimeter, and for the cryogenic and power systems. There has also been extensive magnetostatic modeling to understand the influence of calorimeter geometries containing iron.

The primary goal in 1992 is to begin the development of a prototype coil of full diameter but of 25% of the length required for the SDC detector. This prototype would be completed and tested in 1993 in Japan. In addition to design assistance, the US will provide the test vacuum vessel, the support members and other aspects of the cryogenic systems, and will also continue design work aimed at integration of the solenoid with other detector systems. Most of the support for the prototype magnet design and construction will come from Japan.

4.1.3. Calorimeter system

Our calorimeter system is comprised of a central calorimeter covering the pseudorapidity region $|\eta| < 3$ and a forward calorimetery covering the range $3 < |\eta| < 5.5$. The central calorimetry provides electron/photon identification and measurement, and jet measurements. The forward calorimeter completes the angular coverage to allow missing transverse-energy measurements and to tag the presence of forward-going jets. Electron identification will not be done in the forward region.

Central calorimeter

Since November 1990 we have been considering two options for the central calorimetry: lead/iron absorber with scintillating tile/fiber readout and lead absorber with liquid argon readout. Test beam studies relevant to the scintillating tile/fiber option are now underway at FNAL, and studies of liquid argon calorimetry with fast shaping time have been completed at BNL. Irradiation of scintillator test modules in intense electron beams has been completed at KEK, Orsay, and IHEP (Beijing). In early August we had an extensive review of the two options and further review in mid-September. The scintillating tile fiber option was selected.

Most of our engineering resources have gone into the scintillator option. The scintillator design consists of a lead electromagnetic (EM) section followed by either a lead/iron hadronic section or an all iron hadronic section. The lead sections may be fabricated by casting complete modules or by using plates. A successful test casting of an EM module has been completed and a cast EM module is being tested at FNAL. The iron hadronic sections may either be fabricated from plates fastened together or from thin stamped laminations stacked into modules. An iron hadronic module made from laminations is under construction and will be studied in a FNAL test beam in the next few months. Sufficient conceptual engineering has been completed for the cast-lead, iron-plate version to form the basis for a detailed cost estimate. The other fabrication options will be investigated to allow cost comparisons. The engineering design effort for the scintillator option in FY1992 will be guided by results from the beam tests, our assessment of the need for the more uniform magnetic field that results from an all-iron hadronic section, a performance assessment, and cost. It is already clear from our preliminary cost estimate that a major industrial engineering effort must be started in FY1992 to develop tile-fiber manufacturing techniques on a mass scale. By the end of FY1992 we should be well into preliminary engineering design of the barrel and endcap sections of the calorimeter.

In addition to engineering considerations, there are a large number of R&D issues to be addressed for the scintillator option. The SDC calorimeter requires definitive solutions to many fundamental issues (light output, masking requirements, the use of glue to join the fibers to the tiles and many others) in FY1992 so that the industrialization of the production process can proceed with proper guidance.

Resolution of these issues requires both beam tests (*e.g.* uniformity) and bench tests. The upgrade to the CDF endplug is also using the tile-fiber technique, and we expect to gain valuable experience from this construction effort.

Radiation damage to scintillator is being addressed by source tests of tiles and fibers and by irradiation of test EM modules at KEK, Orsay, and in China. Although many parameters must be controlled in these tests, they have already indicated that existing scintillators can function, with suitable calibration, up to doses of at least 1 Mrad. The accumulated dose in the barrel region is everywhere less than 1 Mrad even for 10 years of operation at a luminosity of $10^{34}\mathrm{cm}^{-2}\mathrm{s}^{-1}$. Finally, the results must be extrapolated to the low dose-rate situation at the SSC. We are working with chemists at Sandia to develop a model for this scaling. Radiation damage tests will continue in FY1992. The precise plan will be worked out after evaluating the results from the current round of tests.

We plan to improve electron identification by using a fine-grained detector consisting of narrow strips located at shower maximum. For the scintillator option, this shower-max detector (SMD) would consist of scintillator strips read out by fibers. Many of the R&D issues are common to both the tower and the SMD parts of the calorimeter. The SMD R&D effort is collaborative between US groups which are responsible for the photodetectors and the Saclay group whose responsibilities include the scintillator and mechanical design. In FY1992 the engineering efforts will be aimed at producing a full design and cost estimate for the SMD.

Forward calorimeter

The forward calorimeter design has two distinct geometrical options. The conventional geometry for the forward calorimeter is as shown in Fig. 2. We are also considering a geometry like an inverted cone that has a more gradual transition between the endcap region of the central calorimetry and the forward region. Simulation studies are underway to evaluate the two concepts. Readout options include ionization (liquid argon, warm liquid or high pressure gas) and scintillation (liquid scintillator). R&D efforts on these technologies will continue in FY1992 by groups from Canada, Japan, USSR, and the US.

4.1.4. Muon system

The major components of the muon system are steel toroids, muon chambers and the scintillator/Čerenkov trigger counters. A conceptual design now exists for the barrel steel toroids, and one is almost complete for the intermediate toroids. Design of a support structure for the toroids (and thereby most of the detector) has begun. Design of muon chambers is underway in the United States and Japan. A preliminary layout of scintillation and Čerenkov counters is complete. A test beam effort to measure the electromagnetic "debris" accompanying high energy muons as they exit an absorber is ready to take data at FNAL. Other efforts are underway at FNAL to measure neutron yields and spectra in and near calorimeters.

In FY1992 both the barrel and intermediate toroids will enter the preliminary engineering design phase. Most of this work will take place at the SSCL in collaboration with physicists and engineers from the USSR.

Since the submission of the Letter of Intent, rapid progress has been made in the pursuit of four alternative chamber designs primarily intended for the barrel region. The options under consideration are extruded octagonal or round aluminum drift tubes, an oriented cell design with oval extrusions containing field-shaping inserts, and an open modular jet-cell geometry. These differ substantially in their mechanical construction, drift length and other parameters. Full length (about 9 m) prototypes will be completed in late 1991 or early 1992 for the three designs to allow realistic comparisons to be made. One design will be selected by February 1, 1992 on the basis of performance and cost.

Extensive work on the design of the support structure and alignment system for the chambers is required in FY1992. To minimize costly installation time, it is planned to preassemble very large sections of the muon chamber and counter systems, which would be installed as units on the toroid steel structures. Detailed engineering studies are required to optimize the design and to obtain the precision required. In addition, we plan to initiate construction of a so-called "super-tower" prototype to gain hands-on experience with construction, alignment, and monitoring of the very large chamber assemblies. This work will take place at the SSCL.

R&D in FY1992 for the scintillator and Čerenkov trigger counters is relatively modest. The primary issue for the scintillation counters is light collection, since the use of a single tube per counter would significantly reduce the cost. Design work on the Čerenkov system will continue.

4.1.5. Electronics systems

Electronics systems include front-end electronics, the data acquisition system, the trigger system, and the control system. Work in all of these areas is well along. Front-end systems for wire chambers are under development in Japan and the United States and will be available for testing with straw tube chambers this year. The conceptual design of the front-end system for calorimetry is similarly advanced, and options are being explored. Preliminary detailed cost estimates now exist for all front-end systems.

Budgetary constraints compel us to select among options for front-end electronics by early 1992. This will be a major focus of activity during this year as the results of the R&D program over the last few years are evaluated. Once selections are made, design and prototyping will commence. Since actual production is not required for some years, there will be time to design, construct and test full prototype systems.

A "straw-man" design of a data-acquisition system with detailed cost information now exists, and extensive work is under way to define protocols and simulate the system. Similarly a "straw-man" design for the trigger system is being produced and documented. A preliminary design and cost estimate of the slow control system has been completed.

In 1992 the R&D and engineering issues that must be pursued for the data acquisition system include modelling and simulation of the data flow, study of data transmission options and reliability analysis motivated by the fact that a large fraction of the electronics system will not be easily accessible during operation. The "straw-man" design will be improved in preparing the Technical Proposal as will the related cost estimate. The design of a portable data acquisition system will be launched. This system will be utilized for subsystem tests and beam tests and would be the first attempt at defining SDC standards for data acquisition.

The design of the trigger system is intimately related to the design of the detector subsystems. Design work will continue for tracking, calorimetry and muon triggers. Preliminary designs exist for all of these systems, and these must be evaluated and their impact on the subsystem assessed. Location of the trigger components also has a significant impact on cable routing and plant. Global Level 1 and Level 2 trigger systems will also continue to be designed. A "straw-man" design and detailed cost estimate will be completed in time for the Technical Proposal.

4.1.6. Computing

In the last year the SDC computing effort has been focussed on a conceptual design of the on-line computing system for the purposes of estimating costs, on developing simulation tools and a structure for event simulation, and on the development of computing models for the off-line computing system that will be needed for the SDC. IBM is an industrial affiliate with the SDC and is committing substantial resources in the areas of scientific database development, data storage, and software design and management.

Our principal need in FY1992 is to develop a greater presence at the SSCL to develop and maintain codes for simulation of detector response and for assessment of physics performance. Permanent staff devoted to these tasks are needed at the SSCL. In addition, as part of the Technical Proposal we must generate a conceptual design of the complete off-line computing system that is both consistent with the needs of the SDC and consistent with realistic budget expectations. Although much of the eventual SDC computing will be located at the SSCL, there must be substantial resources elsewhere in the US and outside the US, and these must be integrated into the overall plan. R&D on advanced database systems and data storage is also required to guide the design. Conceptual design and costing of the on-line system will also continue.

4.2. Project management and systems integration

Funds are required to support the operation of the management of the Collaboration, compilation of cost/schedule estimates from all of the subsystems and engineering coordination to integrate the subsystems into an overall detector concept. In addition, coordination on a detailed level with the SSCL facilities group, responsible for the civil construction for the underground hall and the associated surface buildings, must be maintained. To date LBL

has borne the primary responsibility for coordinating these functions. During FY1992, these activities will shift to the SSCL with the goal that all project management and engineering integration coordination be fully operational at the SSCL by the latter part of FY1992.

4.3. Summary of budget request

Our budget request for fiscal year 1992 is summarized in Table 1 by WBS element. We are requesting a total of $19.9 for FY1992. In addition, we are requesting $900K to support work on off-line computing. These amounts are required to keep the SDC project on schedule. Within this budget envelope we already are forced in some cases to select technologies and design directions before R&D is completed. Any significant reduction in the budget for FY1992 will greatly exacerbate this situation and either force us to make premature choices of technologies or produce significant delays.

Table 1
FY1992 budget request summary

	US REQUEST ($K)
1 TRACKING SYSTEMS	**5900**
1.1 SILICON TRACKING SYSTEM	3400
1.2 BARREL TRACKER	2375
1.3 INTERMEDIATE TRACKER	125
2 CALORIMETRY	**4800**
2.1 BARREL CALORIMETER	3000
2.2 INTERMEDIATE CALORIMETER	1400
2.3 FORWARD CALORIMETER	400
3 MUON SYSTEM	**3500**
3.1 MAGNET SYSTEMS	1000
3.2 MEASUREMENT SYSTEMS	2500
4 SUPERCONDUCTING MAGNETS	**600**
4.1 SC SOLENOID	500
4.2 CRYOGENIC SYSTEMS	100
5 ELECTRONICS SYSTEMS	**2300**
5.1 FRONT-END SYSTEMS	1450
5.2 DATA ACQUISITION SYSTEMS	350
5.3 TRIGGER SYSTEMS	500
5.4 CONTROL SYSTEMS	0
6 COMPUTING	**0**
6.1 ON-LINE COMPUTING	0
7 CONVENTIONAL SYSTEMS	**0**
7.1 MECHANICAL UTILITIES	0
7.2 ELECTRICAL UTILITIES	0
7.3 SAFETY SYSTEMS	0
7.4 STRUCTURAL SUPPORT SYSTEMS	0
8 INSTALLATION AND TEST	**0**
8.1 TEST BEAM PROGRAM	0
8.2 SUBSYSTEM INSTALL. AND TEST	0
9 PROJECT MANAGEMENT	**2800**
9.1 PROJECT PLANNING	600
9.2 PROJECT TRACKING	225
9.3 DOCUMENT DIST. AND CONTROL	175
9.4 QUALITY ASSURANCE	50
9.5 ES&H	150
9.6 DETECTOR INTEGRATION	1600
DETECTOR R&D AND ENGINEERING TOTAL	**19900**
OFF-LINE COMPUTING TOTAL	**900**

5. Tracking system

5.1. System Description

The tracking system is schematically shown in Fig. 4. For radii below 0.5 m it consists of multiple layers of silicon strips and/or pixels covering a pseudorapidity interval $|\eta| < 2.5$. The main goal for this part of the tracking is to provide a system with strong pattern recognition capability and survivability, as well as the ability to identify vertices associated with heavy quark decay.

For radii from 0.5 m to the outer tracking radius of 1.7 m the same pseudorapidity range is covered by an outer system whose functions are to provide a Level 1 high p_t charged particle trigger, and, in combination with the inner silicon system, high precision measurements of momenta. This outer system is divided into a central and two intermediate-angle structures. For the central part, the two technologies under consideration are gas/wire with 4 mm straw tubes and scintillating fibers of about 800 μm diameter. The former is relatively well understood and suffers principally from marginally large occupancy at design luminosity, except near the outer radius. The fibers have about an order of magnitude less occupancy and afford the prospect of successful operation at the highest luminosity. However, experience with them is relatively limited, the readout needs much development and, in view of the large channel counts needed, the costs may be relatively large.

For the intermediate-angle outer tracking system the technologies under consideration include scintillating fibers and gas microstrip chambers. The considerations of geometry, occupancy, and reasonable cost make the problem difficult.

Simulation tools to allow simultaneous consideration of the signals from both silicon and outer trackers in understanding pattern recognition needs are almost ready. These tools will be used to develop more optimized structures of inner and outer detectors.

Tables 2 through 5 list milestones separately for the silicon, straw, scintillating fiber and gas microstrip technologies, respectively. The budget requests for the whole tracking activity are in Table 6.

5.2. Silicon subsystem

The silicon tracking system plays the critical role in pattern recognition for the tracking system. When combined with measurements from the outer tracking structures, including, in the case of muons, the chambers beyond the calorimeter, it provides high precision momentum information over the full pseudorapidity region $|\eta| < 2.5$. It also provides high resolution vertex information, and the potential for Level 2 trigger information. The system consists of either pixel detectors or special strip detectors, within 10 cm in radius, and strip detectors at larger radii.

The parameters of the system are determined by several general considerations. The pattern recognition role dictates a minimum number of detection layers. This issue is still being clarified by our simulation studies. The vertexing requirement dictates a ratio between inner and outer radii of about four in order for the vertexing accuracy to be comparable to the individual detector measuring accuracy. To allow extrapolation to the outer tracker with an accuracy comparable to the size of an outer tracker measuring element (2 mm) requires about 25 cm of silicon tracking length. In the forward direction, the silicon is the main element determining the momentum measuring accuracy and thus should have the largest lever arm affordable.

Work on the silicon system is proceeding in a large number of areas, all of which are critical to achieving a system with adequate performance. These areas include: low-power, low-noise, radiation-hard electronics; low-mass, ultra-stable, mechanical structures; low-mass, vibration-free, cooling systems; the development of maximally radiation-hard detectors; and the development of data acquisition and triggering schemes using the silicon.

Major accomplishments over the past year have included:

1. Demonstration that double-sided silicon detectors will function properly up to doses of 10^{14} particles cm^{-2}, implying 20 years of lifetime at a radius of 15 cm for the SSC design luminosity.
2. Demonstration that bipolar and radiation hardened CMOS electronics will function for the same fluences as listed above for the detectors.
3. Construction of a prototype wick-cooling ring demonstrating the removal of heat for hours by a fully passive system (that is one with no pumps).
4. Finite element calculations for the major mechanical elements of the detector satisfying our dimensional tolerance goals.

5. Demonstration of the basic mechanical structure of a detector module, with sufficient rigidity and ruggedness.

5.2.1. Electronics

Front-end electronics

The development of front-end electronics is the responsibility of LBL with contributions from UCSC, KEK, Oxford, and RAL.

Scope

Front-end electronics for the silicon tracker includes:

1. The circuitry immediately associated with each detector, i.e., the readout chips with preamplifiers, shapers, comparators, time-stamping, data buffering, and sparse readout circuitry.
2. Bus selector chips that organize the signal flow to the output lines.

Fiber optic drivers and associated circuitry, i.e., serialization and transceive control are included under data acquisition.

Overall Schedule

For SSC turn-on in fall of 1999, mass production of electronics must commence in late summer of 1994 to allow assembly and testing. Prior to mass-production of the IC's needed in this system they must pass exhaustive tests, individually and to the system level, including radiation exposure. This means that a complete chip set representing the final design must be completed by fall of 1993. This leaves FY1992 and FY1993 for the complete design cycle, which includes several iterations with interspersed tests. It is important that chips including subsets of the signal processing chain be available early on to allow tests of the module assemblies with detectors, both to assess system performance and overall radiation resistance. Hence a prototype front-end chain must be available by the end of FY1992 to allow time for testing and subsequent iterations. This leaves little time for ramping up the effort.

Architecture

The front-end electronics must meet the following specifications:

Noise—

$Q_n < 1200$ electrons

Timing accuracy—

$t < 15$ ns for 1 fC $\leq Q_s \leq$ 8 fC

Power per channel—

$P_{ch} < 1$ mW (including data buffering and sparse scan)

Double-pulse resolution—

$t_{dead} < 160$ ns

Inefficiency per channel—

$< 0.5\%$ (including losses due to pile-up, circuit recovery time, finite buffer capacity, *etc.*)

The preamplifier will be either of the current or charge sensing type, operating continuously without external resets. The front-end rise-time will be determined primarily by this stage. The pulse width will be determined by the equivalent of a single CR differentiator, either by appropriate preamplifier design, or by a network following the preamplifier. The overall pulse response will be designed for a peaking time of ~20 ns.

Since the allowable time walk of the overall timing chain must not exceed the bunch period of 16 ns, the comparator design must explicitly account for the detector collection time, the electronic shaping time constants, and comparator overdrive to meet this requirement reliably.

The stages including the preamplifier through the comparator will be implemented with bipolar transistor IC's.

The digital time stamping and data buffering will be designed to allow some latitude in trigger latency time. This specification requires further work. The sparse scan circuitry will be activated in response to a trigger signal and detect whether any channels were struck in the correct time window. Output drivers will be activated only when a chip has detected a valid trigger. The time stamping and sparse readout circuitry will be implemented in CMOS.

Cabling and module design

Cabling for the silicon tracker electronics must be of low mass and be designed to provide adequate isolation between various power and signal busses to preclude interactions between channels that could have disastrous consequences. With several million channels of electronics the silicon tracker relies on on-chip data sparsification. With only a hit/no-hit indication one is essentially "flying blind" with respect to signal diagnostics. Hence, reliable control of

cross-talk and any other causes of spurious hits is of extreme importance. The cabling scheme must also consider fault isolation, to preclude that individual defects render substantial parts of the detector to be unusable. Cross-talk can be reduced by proper selection of the front-end shaping time constants, to reduce electronics response to the spectral distribution of bus activity (especially high-frequency clocks). Differential lines are required to reduce coupling from the cable to the input amplifiers through the detector strips. For local bussing the signal levels on these lines can be kept small; just how small must be determined by careful analysis and experiments.

On a simpler level, local bus rates and the organization of the signal bussing must be determined in detail. Although bus activity is driven by individual read-out chips, intermediate bus selector chips are necessary to combine busses from groups of readout chips within a readout section, i.e., the unit feeding one optical link.

Tasks

The primary goal for FY1992 is to produce a prototype system that includes at least all of the front-end electronics circuitry through the comparator output (bipolar transistors). We also intend to produce a second prototype chip that implements time-stamping, data-buffering and sparse readout (rad-hard CMOS). The chip-set will provide a test bed for debugging and system/circuit refinement to arrive at a final design at the end of FY1993.

Details of FY1992 work depend on the outcome of several key tests that are currently underway:

1. Radiation tests of the Tektronix bipolar process;
2. Cross talk measurements on various detector-electronics-cable configurations;
3. Initial circuit analysis and design of preamplifiers, shaping circuitry, and comparators.

Data acquisition and triggering R&D

This area is the responsibility of the collaboration members from the U.K., in particular the Rutherford Laboratory, Oxford and Bristol groups. The work on data acquisition at present and into next year aims at clarifying the general issues related to fiber optic readout. Three alternatives for the driver are under investigation (lasers, LED's and optical modulators) and a study of fiber radiation resistance is also underway. Comparisons of options will be made from the point of view of radiation hardness, cost, material, and performance.

Trigger studies are emphasizing the reconstruction of high transverse momentum tracks for a second-level trigger. This requires readout of the silicon after a first-level trigger. Issues of bandwidth and noise generation for such a scheme are part of the LBL work on the front-end, which will be coordinated with the work in the U.K. A specific second-level trigger scheme using hit patterns has been defined and an estimate of the number of trigger cards completed. This scheme will be looked at carefully, including simulation studies, next year. At lower priority, schemes for generating a contribution to the first level trigger are also under study.

5.2.2. Mechanical engineering

The mechanical design work for the silicon tracker is being done at the Los Alamos National Laboratory. A major technical goal for FY1992 will be to perform the critical mechanical stability and cooling tests utilizing a prototype of the central region. We placed emphasis on three specific technical tasks in FY1991 to insure attainment of this goal. The tasks were: (1) wick development tests; (2) design and construction of a graphite composite cooling ring; and (3) development of a mechanical support method for the silicon detectors. Successful completion of those tasks will lead to construction of a prototype in FY1992 in which the individual detector modules (complete strip detectors/electronics sub-assemblies) will be simulated by full scale replicas made from engineering grade silicon and resistive heat loads. We will construct a full-scale replica of a central region super-layer section with associated graphite support structures, kinematic supports, and an integral heat pipe cooling network. The stability will be monitored with an external optical set-up. This approach will provide confirmation of data extracted from an internal fiber-optic optical position monitoring system. The internal optical system could become a part of the overall detector assembly.

Demonstration of our alignment/assembly concepts will be required before we construct the full-scale central region prototype. Additionally, the FY1992 work will involve a demonstration of all steps essential to performing a highly repetitive, precision assembly operation. Development and demonstration of opto-mechanical work stations suited to performing important elements of this task are planned.

Operational tests of the prototype central region superlayer will instill confidence in the safety plans developed specifically for the silicon tracking system. We are concentrating on seeking early resolution of all issues in that area. In the final system design we will provide double-walled sealing for key penetrations through the butane vapor space.

Another critical area whose study needs to be continued in FY1992 relates to material compatibility. Compatibility tests of materials in a combined radiation and hydrocarbon environment are continuing. Tests to date, although quite encouraging, have been limited in scope, *e.g.*, did not include important elements of a fully-active strip detector with associated cabling. Successful completion of these planned tests will serve to confirm our decision to use an open butane vapor return concept.

In FY1992 we will also concentrate on addressing design concepts relating to the forward region, space frame and composite structures. The flat planar arrays are a distinctly different structural arrangement from the central region and will require considerable development to achieve the highly stable platform requirements desired of the silicon system. Wedged-shaped detector modules will be constructed and strength tests will be performed. Complementary finite element structural solutions will be prepared for coordination with the structural tests. Design studies of the mounting aspects of the wedge-shaped detector will be conducted to insure that all structural aspects are correctly modelled. Aspects associated with achieving kinematic strain-free support of the forward region and the primary structural space frame will be investigated as well.

5.2.3. Detector program

R&D using detectors with barrel geometry

The development of the basic structure of rad-hard double-sided silicon detectors (DSSD's) is being continued by our Japanese collaborators in conjunction with Hamamatsu Photonics Company, emphasizing the barrel part of the tracker. In parallel, extensive radiation damages tests will be performed to continue to gain a deeper understanding of the expected detector performance. The schedule aims at producing barrel DSSD's in 1992 and an extensive beam test in 1993. A consequence of the manufacturing runs in 1992 should be an understanding of the yield and cost for detector production.

The development of the forward detectors, which are arranged in the form of disks, is being done at Lawrence Berkeley Laboratory, Johns Hopkins University, UC Riverside, University of Pittsburgh, and the University of New Mexico. These detectors will be similar to the barrel ones in their functional design but their geometrical lay-out will vary. As for the case of the barrel detectors, collaboration with Hamamatsu will continue. An alternative source of the forward silicon detectors is the Institute for Space Device Engineering in collaboration with the SDC collaborators from Dubna, USSR. In 1992 both production and assembly of detectors will be the focus of their R&D.

The development program of production-type detectors is coupled with a program to test the radiation hardness of all DSSD components, both in ionizing radiation (photons) and displacing radiation (neutrons). The data accumulated up to now allows a fairly good prediction of the detector lifetime due to bulk damage. The increased leakage current is well understood and we plan to reduce it by cooling the detectors to 0°C. The change in depletion voltage due to creation of acceptor sites is another bulk effect whose consequences on the detector lifetime is now understood. The more subtle surface effects affect the biasing resistors and the coupling capacitors in an acceptable manner, while their consequences, with respect to interstrip isolation and capacitance, are still under investigation. Too large a capacitance degrades the signal and increases the noise of the front-end electronics. For the low-power front-end designs being studied for detector read-out, the capacitance is the most crucial parameter.

UC Santa Cruz will continue to study the optimization of the DSSD's. Our simulations have shown that a straightforward method of decreasing the interstrip capacitance is to reduce the implant width. The capacitance is a universal function of the ratio (width/pitch) independent of pitch. Our measurements of the capacitance for different detector geometries confirm the universal scaling. Consequently, we will design and produce detectors with implant width which is minimal, but consistent with safe operation and high breakdown voltages. This work will require dedicated manufacturing runs with radiation tests to follow.

Development of forward disk system

The R&D plan for the forward disk detectors is as follows:

1. Develop a full layout of Si disk detectors, including dimensions, strip geometries, and bonding-pad layout for:

(*a*) inboard readout,

(*b*) outboard readout,

for two choices of stereo angle,

(*a*) minimum stereo angle (5–10 mrad),

(*b*) maximum stereo angle (of the same order as the wedge half-angle).

As part of developing these layouts, we shall investigate the possibility of supplying mask artwork to vendors using their design rules in order to gain greater flexibility in specifying our needs.

This task is important in order to assess the feasibility of these choices and their potential impact on the overall Si tracker; and to understand the constraints placed on the disk detectors by the overall Si tracker design.

2. For at least one of the detector types in (1.), and for as many readout and stereo angle alternatives as are viable, acquire samples from vendors hopefully including, but not limited to, Hamamatsu. These detectors may be 2- or 1-sided as availability dictates, but their physical layout should correspond closely to what is specified in (1.).

If it is particularly attractive financially to do so, we should also acquire one or more "off-the-shelf" wedge-shaped Si detectors, *i.e.*, detectors that have already been designed without SDC's geometrical requirements in mind, in order to learn what we can from them.

This task is important in order to understand what can be supplied and how best to specify it; and to qualify wedge detector vendors who can to be qualified.

3. Assess the performance of the acquired detectors emphasizing issues unique to particular geometries of the wedge detectors:

(*a*) dependence of performance on variation of strip pitch and/or length within a single detector

(*b*) performance in "unusual" regions of the detector, *e.g.*, bonding-pad areas, regions without stereo overlap, *etc.*

(*c*) comparison of performance on the p and n sides.

Under "performance," we include resolution in the coordinate normal to the strip direction, resolution in the stereo direction in the case of two-sided detectors, resolution *vs.* angle of incidence, radiation damage, interstrip isolation, and signal/noise emphasizing the role of interstrip capacitance.

This assessment will use various means of detector illumination (IR photons, charged-particles) and already-developed readout electronics.

4. Using engineering-grade Si, construct representative wedge-shaped ladders appropriate to (1). Using this experience, and building on the vendor contacts in (2), assess the vendors' ability to supply complete detectors in wedge-shaped ladder format.

As part of this task, prototypes of additional components of the forward Si structures will also be tested and evaluated. This work will be coordinated with Los Alamos.

5.2.4. Pixel R&D

Accomplishments in FY1991

Progress in FY1991 was made in several areas. A complete architectural design was established by Hughes that incorporated the following performance features:

1. x-y storage of smart pixel hits in 32-deep pattern registers;
2. Time stamping of hits in 32-deep content addressable memory;
3. Sparse readout of valid hits in a selected time slice;
4. On-chip rejection of ghost hits;
5. On-pixel storage of analog information;
6. Non-redundant readout of neighbors option;
7. Programmable microcontroller.

Two test IC's were fabricated by Hughes to determine behavior of single pixel cells and two-dimensional arrays of pixel cells. The pixel cell was designed with emphasis on smallest physical area (50×150 microns^2), and employs CMOS switched capacitor design principles. Much was learned from these that led to a number of changes in a third test IC, designated Foresight 5. Some major lessons are that good substrate isolation is very important to prevent coupling of digital transient noise to the sensitive analog section, and that column and row "hit" signals must be propagated with small voltage

swings, to prevent undesirable intercell coupling. A small component of positive feedback has been included in the comparator to reduce time-walk. A completely new pixel cell layout should also reduce unwanted parasitic effects. The peripheral register structure has been redesigned to permit operation with an available VLSI test station.

At LBL, an advanced pixel cell design has been pursued with encouraging results. This design incorporates RC-CR shaping, peak sample and hold, DC servos to stabilize operating points, and autonomous operation, requiring no resets or initialization. The design incorporates principles that maximize radiation hardness. Preliminary results indicate that the design meets specifications for time-walk, noise and general functionality. Many of these features will be needed for the final pixel cell design.

Radiation damage studies using the UC Davis cyclotron showed that results obtained with this low-energy facility can be scaled to SSC conditions. Further studies focussing on the type-inversion phenomenon will be undertaken. Effort at UC Davis is also concentrating on simulations of the pixel vertex detector within the framework of the SDC GEANT shell.

The Space Sciences Laboratory at UC Berkeley, in collaboration with Hughes, SLAC, and the University of Oklahoma have performed beam tests of high resolution 256×256 pixel arrays. Both the intrinsic performance of these small pixels and their use as beam defining elements for testing the new smart pixel arrays motivated these efforts. A high precision telescope for more beam tests is being constructed.

Issues in pixel development

The focus of the pixel effort needs to shift from proof-of-principle tests with small arrays of radiation-soft smart pixels with rudimentary digital peripheral circuitry to the design of radiation-hard devices with sophisticated peripheral control. Although the major effort should continue to be VLSI circuit design, with architectural refinements based on experience, mechanical systems design needs increased attention. Radiation damage studies of both radiation-hard IC's and detectors are necessary to determine the survivable fluence and expected lifetime at a particular radius from the SSC beamline.

Architecture

The architectural concept is data-driven, allowing a substantial reduction in trigger Level 1 buffer size relative to a clock-driven scheme. However, the trigger Level 1 latency has steadily grown, to more than 3 μs, increasing the buffer size proportionately. Given additional uncertainty about background rates and ultimate luminosity levels, concern has arisen that buffer depths may have to be uncomfortably large. This will be a concern for other systems as well.

This concern has led to a reexamination of the basic concept of on-chip Level 1 buffering. An alternate approach that reads out every hit to a nearby data collection chip is being reconsidered. Readout is initiated upon registration of a hit, so that the array is constantly purging itself of data, as fast as possible. This approach would offer a very significant simplification in the pixel peripheral circuitry. In some sense this "read all" concept moves the problem from one chip to another, but the formatted data is more compact, and is more easily handled in a FIFO-style structure. This architecture minimizes pileup effects, as data resides on-pixel only a very short time. The problem to be solved in the new architecture is low-noise low-power data transmission over very short low-mass transmission line structures.

A new architectural concept has been proposed that aims at achieving the spatial resolution characteristic of an analog system, but with essentially all digital circuitry. The basic idea is to obtain a measure of charge sharing between neighboring elements by making rough measurements of the time-walk of the pixel cell comparator outputs, as seen on the hit-column and hit-row busses. Although quite non-linear, the time-walk appears to be more than sufficient to provide spatial resolutions in the 5 micron or less range. The time-walk would be measured by simple ripple circuits that are easily encoded; this time-walk "ADC" is nearly instantaneous. This architectural concept is naturally compatible with the "read all" concept discussed above. Several other advantages would be obtained with this architecture, such as much smaller pixels, since no sample-and-hold element is needed.

Detectors

Because the pixel arrays are positioned close to the beams, they experience high fluences strongly affecting detector performance. The two main expected effects are type reversal, from n or p type, and large increases in leakage current.

Type reversal in the detector due to the creation of acceptor sites by radiation damage mechanisms forces us to obtain signal readout from the n side, rather than the traditional p side. The reason for this is that the junction will switch to the n^+ side after about one year at full SSC luminosity. As radiation damage increases, the detector will require a larger voltage to maintain full depletion, and at some point, partial depletion will occur due to some breakdown limit. Operation of the system with partial depletion is still viable if the pixels are on the n^+ side, and the system will die gracefully with depletion depth shrinking as the square root of the total fluence (for constant voltage).

Double-sided strip detectors have already been successfully fabricated that accomplish the needed inter-element isolation on the n^+ side. As we intend to use the LBL high-temperature process that utilizes phosphorus-doped polysilicon gettering on the n^+ side, we need to gather experience with regard to how sufficient isolation and gettering can be accomplished simultaneously.

In addition, the radiation-induced leakage current will increase greatly after the SSC approaches design luminosity. If switched capacitor reset design philosophy were to be used, the signal transmitted to the readout IC must be AC coupled to avoid saturating the preamplifier. The AC coupling can be built-in to the detector with a polysilicon resistor and capacitor, but the resistors must be physically small, with good noise performance, and this needs to be tested. However, if the pixel cell has continuous time signal shaping with a carefully designed DC servo on the preamp, rather than a switched capacitor, the servo may be able to soak up the leakage current (a few nanoamperes/pixel).

Radiation hard pixel cell

The realization of truly radiation hard circuits involves both design principles and fabrication process. The circuit designer must incorporate design elements that can tolerate threshold shifts that come with high fluence. Due to junction leakage, voltage levels on capacitors may drift significantly. The appropriate design tactics generally increase circuit complexity due to the use of matched differential pairs, DC servos, etc. The challenge is to realize the needed functionality in the smallest possible area.

In addition, the effects of radiation damage to the detector introduces significant design changes. The type reversal phenomenon requires signals to be obtained from the n^+ side, changing the input signal polarity to negative. For the circuit designer, a negative input signal polarity is a beneficial change.

Future efforts

Unfortunately, because of the limited funds allocated to SDC efforts, it is not possible to support the pixel detector R&D in FY1992 through these funds. The SDC hopes that such continued support through generic R&D funds will be possible. Assuming that continuing pixel detector R&D can be supported, the SDC can later have the option of replacing, in the inner layers, the strip detectors by pixel detectors, provided such replacement can be justified in terms of cost and performance considerations.

5.3. Outer tracker

5.3.1. Straw tube systems

Although R&D already done has provided a rather good understanding of straw tube operation in the SDC environment, more development work is required in many areas. These include the choice of gas and gain, measurement of resolution, readout electronics, system performance for pattern recognition, momentum measuring capability, trigger, and cost. There is also a fundamental engineering issue as to whether the straws should be assembled as multiple-straw modules that are subsequently loaded onto their cylindrical supports, or whether each individual tube should be directly mounted onto the support structure. The R&D areas listed below do not include the development of the electronics, which is covered in Section 9.

Straw tube R&D

1. Drift cell R&D

   a) Cathode materials and preparation

      Considerable progress has been made in evaluating materials (Mylar, polycarbonate, Kapton) for the cathode tubes. A thin conductive coating of aluminum, copper, or gold provides the electrode. The metallization thickness is critical in terms of electrical resistance and lifetime in the radiation field. The resistance must be made small to avoid excessive signal attenuation in the long detectors contemplated for SDC. This will be accomplished by increasing the thickness of the deposited metal surface, which also prevents removal of the metal layer by irradiation.

Table 2
Silicon subsystem R&D milestones

Milestones and Goals	Date
1. Front-end electronics	
Establish final design parameters	9/91
Fabricate first prototype preamplifier/shaper/comparator chip	12/91
Fabricate second prototype front-end chip	4/92
If necessary, third iteration of chip	8/92
Determine architecture for time stamping/data buffering	9/91
Fabricate prototype chips as necessary using MOSIS to test circuit concepts, followed by fabrication of rad-hard digital chip	7/92
Preliminary design of data transmission system; bus selector chip specification; and specification of data transmission protocol for digital front-end chip	12/91
Complete prototype data-transmission system for initial system tests	5/92
2. R&D, double-sided detectors (DSSD), barrel geometry	
Prototype full-length DSSD	11/91
Test prototype	2/92
Mock-up detector with LSI chip	3/92
Prototype of final DSSD	8/92
Combine detectors, chips, bussing	9/92
Beam and radiation test	9/92
3. R&D forward disk detector	
Finalize size and arrangement of disk detectors	11/91
Mask specifications for given design	1/92
Procurement of wedge detectors specific to SDC geometry	4/92
Testing, DC, and signal characteristics	7/92
4. Major mechanical R&D	
Cooling ring development complete	2/92
Cooling ring fabrication for prototype	6/92
Study of adhesives, candidates established	12/91
Prototype Si detector assemblies fabricated	2/92
Si-shell assembly tooling complete	1/92
Start component-shell final development	6/92
Precision prototype alignment test complete	6/92
Assemble shell	8/92
Forward region concept definition	11/91
Design work on forward region and space frame completed	9/92

Preliminary studies have shown that attenuation lengths of 6–7 m can be achieved, and that the current densities at $10^{33}\mathrm{cm}^{-2}\mathrm{s}^{-1}$ are about 1/100 of those that would cause breakdown. Studies of the removal of the metal coating by irradiation will continue in FY1992, including experiments with copper electrodes.

b) Wire parameters

The choice of wire diameter also affects the resistance, hence attenuation length, which must be optimized along with the gain and lifetime specifications for the detectors. Preliminary tests with 50 μm diameter wire show acceptable efficiency and long attenuation lengths. Studies in FY1992 include full mapping of the plateau curves, resolution, and attenuation vs wire size. The wire and cathode work interacts with both the radiation damage studies and electronics

evaluation task discussed below.

c) Wire support

Wires in the straw tube detectors have to be supported at intervals $\lesssim 1$ m. Since detectors of 3–4 m active length are desired, the supports must permit some scheme for inserting the wire from an end, while establishing the wire position within the required tolerances. Prototypes have been made which meet either the alignment or manufacturability criterion, but refined designs to meet both are needed. This is one of the goals for FY1992.

d) Gas filling

The gas mixture has to be chosen to optimize many properties of drift tubes, including gain, drift velocity and its uniformity over the drift cell, operating voltage, efficiency, noise, breakdown, behavior in a magnetic field, and lifetime. We have shown that CF_4 has many of the desired properties, including large drift velocity (needed to minimize pileup) and protection from aging effects. Good efficiency and resolution have been observed with mixtures of this gas with isobutane. The flammability of the isobutane remains a concern. Additional experimentation is needed to determine whether alternatives can be found, and to extend confidence in the reliable long term operation of detectors.

2. Endplate, feedthroughs, and termination

The R&D program entails continued development of a low-mass end structure that accommodates a detachable readout board, and of a custom, low-mass insert for the non-readout end providing a blocking capacitor and impedance matching termination. The structure must also provide for gas flow to the tubes. Present prototypes allow only for permanently attached interconnect boards that fan raw signals to connectors to which relatively low-density front-end circuits are attached. Since the dynamic range of signals expected from 3–4 m long detectors is large, great care must be invested in the control of crosstalk.

3. Cell placement, alignment, module structure R&D

We will continue to develop multiple-straw assemblies for the barrel tracker, in the form of free-standing modules (assembly Option 1), or of individual straws (or perhaps bundles thereof) bonded directly onto superlayer support cylinders (assembly Option 2).

a) Straw tube modules (assembly Option 1)

We have built short prototype detector modules of 64 straws contained in low-mass graphite epoxy shells. Versions which are one foot long have been distributed among the groups collaborating on this work, and the first 1 m long, 200-straw shells are in fabrication now. The next step is to develop prototypes 4 m long. These will be assembled into a prototype sector composed of four superlayers (two axial, two stereo) with several modules in each superlayer (12 modules total). The support system will be a prototype of the final design and will be studied for alignment and stability.

b) Straw tube superlayers (assembly Option 2)

We have built and tested stacks of 3 m long straws. The plan in this option will be to develop machinery to automate the stacking and alignment process. A prototype will be built comprising a superlayer of diameter 1.5 m and length 4 m constructed on a carbon fiber cylinder. Eight layers with a total of 2000 tubes would be mounted on two opposite sections of the cylinder.

We expect that the choice between these two assembly options will be made by January 1992, and the budget request in Table 6 funds just one large prototype device. Completion of this full 2000 channel prototype is funding limited and will likely spill into FY1993.

Operation of the prototype superlayer or sector will be studied in a test beam. A complete study of high-rate performance, track matching between superlayers, alignment, attenuation, resolution, and efficiency will be done. The front-end and trigger electronics will be as close to the final design as possible.

4. Detector and electronics evaluation

We will continue to subject the smaller prototypes to tests of their efficiency, attenuation length, position resolution, recovery time, and other parameters critical to their performance as functions of the choice of gas filling, rate, electronics sensitivity, etc. The prototypes will be operated with the front-end, time-digitizing, and trigger electronics as they become available to assist with development of the electronics. The first custom boards

Table 3
Milestones and goals for straw tube R&D and engineering

Milestones and Goals	Date
Design of endplate for detachable readout board	12/91
Evaluation of multi-straw module preamp/shaper/discriminator prototype	12/91
Assembly of full-scale 4 m multi-straw module (≈250 tubes)	1/92
Develop HV distribution with failure confinement (*e.g.* fuses); establish cable and utilities plant requirements	2/92
Complete construction of second prototype multi-straw module	4/92
Prototype of detector bundle placement device	4/92
Auto assembly and manufacturing design	6/92
Develop precision survey technique	8/92
Complete 3D model of detector bundle and support for integrated model	10/92
Complete evaluation of efficiency, resolution, and attenuation of full-scale multi-straw element with prototype of full electronics (preamp/shaper/discriminator/TVC or TMC)	12/92
Construction of full sector/superlayer (2000 channels)	5/93
Test beam studies	93–94

will be appearing near the end of FY1991.

5. Aging and radiation damage studies

   Aging studies with radioactive sources and with reactor and accelerator test beams will be conducted to explore drift tube failure modes and their cures. Issues include deposits on the electrodes and removal of the cathode metal. New gas mixtures (*e.g.* less flammable than isobutane in CF_4) need to pass severe damage testing to assure robustness of the devices.

6. Engineering for straw tube placement

   A draft concept for assembly of detector modules (Option 1) into a system of cylindrical superlayers has been developed. Low-mass support cylinders of sandwich construction (acrylic foam between graphite-epoxy skins) provide the structure, while spacing ribs provide the precise locating surfaces for mounting the modules. Ideas for attaching the modules range from bonding them directly to the ribs to inventing clamps that would permit *in situ* removal of modules for repair or replacement. Conceptual design of this support structure interface is a major task for FY1992. We also plan continued conceptual design work to prove that alignment goals can be met, including development of precision survey techniques and finite-element analysis for the modules and of the nested superlayer assembly. Manufacturing and automated assembly techniques will also be studied. Finally, the concepts will be tested in a prototype sector as discussed above.

   For assembly Option 2 the critical conceptual development centers on instrumentation to place straws directly on support cylinders with the required precision and positional stability. Requirements for the precision of the structural cylinders themselves are tight. Preliminary investigations of options have been done which show that precise cylinders of these dimensions appear feasible. In FY1992 we plan to prove the concept by constructing a full scale prototype superlayer. Also to be designed and tested is an endplate structure which forms a complete ring at each end of the 6–8 m long support cylinders.

5.3.2. Scintillating fiber systems

A significant amount of research and development has been performed on fiber scintillators and waveguides, and the associated photodetector, the Visible

Light Photon Counter (VLPC). To date, several scintillator options have been identified and are under development or refinement. The base material is polystyrene, and the cladding is acrylic (PMMA). Cladding options of lower refractive index are under investigation as options. The standard waveguide is 830 μm diameter with a 30 μm thick cladding wall. Scintillating fiber up to 4 m long is spliced to clear waveguide of 4–5 m length which transports the scintillation light by total internal reflection to a VLPC which resides in a helium cryostat at 6–7° K. Each fiber has its own photodetector.

The VLPC's are packaged in linear arrays with 900 μm pitch. Currently these devices have been produced with 85% quantum efficiency, and fabrication of new devices with markedly reduced infrared response is underway. In recent tests with ^{207}Bi and ^{106}Ru sources, excellent photodetection capability has been demonstrated. Four to five photoelectrons were detected using a VLPC coupled to 4 m of clear fiber (BCF98) optically spliced to 4 m of scintillator fiber waveguide (BCF99-05) . This important milestone was achieved using a compact dip cryostat, which is capable of supporting several VLPC channels.

The demonstration of the viability of scintillating fiber systems for high precision tracking at reasonable cost requires considerable further R&D, directed toward systems comprised of larger numbers (10–100) of channels, and refinements of the scintillation material. There is presently a 16 channel laboratory bench test underway to study operational and cryogenics issues and a 96 channel prototype system is in preparation for beam tests at FNAL. It is hoped that proof-of-principle can be demonstrated from this work. Further R&D is then required to optimize scintillating fiber and waveguide fiber characteristics, develop the process for splicing scintillators to waveguides, optimize fiber and fiber-ribbon fabrication, and develop the readout. In particular, prototype cassette and canister cryostats capable of supporting 1024 VLPC channels are to be produced during FY1992, based on the conceptual design study initiated in FY1991.

R&D objectives for individual elements are aimed at selection of coatings and fluors, optimization of photoelectron yields, and demonstration of viability in the SSC environment. Engineering efforts are focussed on prototypes of the readout and preparations for large scale manufacture of scintillating material and fabrication of ribbon assemblies. Prototypes on the scale of several thousand fibers are envisioned.

Scintillating fiber R&D

Optimization of scintillating-fiber characteristics for the SSC/SDC environment focuses on light yield, robustness, radiation hardness, and time response. The principal areas of development remaining for FY1992 concern fluorescent dyes and extra-mural coatings. The goal is selection of the final scintillating material and claddings on the basis of well understood and well demonstrated properties and performance characteristics.

Dye—We plan to continue our systematic studies of large Stokes shift dye compounds in polystyrene in various single-step and multi-step combinations and concentrations. A portion of this work will be done in collaboration with industry. The most promising scintillators will be fabricated into preforms and drawn into fiber for complete characterization measurements and radiation hardness evaluation.

Extra-Mural Coating—Measurements of the performance characteristics of scintillating-fiber arrays using a variety of extramural coatings is planned. The issues are the reduction of optical cross talk to an acceptable level and possible improvement of the light yield. Among the coatings to be studied are polysiloxane, aluminum, and opaque adhesive.

Waveguide research and development

Waveguide R&D to date has resulted in reasonably low-loss clear fibers with attenuation lengths in the range 8–9 m for light already collimated by a long scintillating fiber. The two main issues remaining are optimization of the cladding and resolution of the possible connection between radiation damage and the presence of oxygen.

Cladding—A systematic evaluation is planned for the set of ultra low index of refraction claddings available. To have proper illumination, the waveguides will always be spliced to long scintillating fibers. Substantial collaboration with industry is expected as the systematics of a sizable production run is necessary.

Radiation Damage and Oxygen—Controlled exposure studies are planned to investigate the impact of a normal air vs. oxygen-free environment. Other results have indicated that oxygen both aided annealing and increased permanent damage. Most of these results have come from very high exposure

rate tests where doses of order 5 Mrad are delivered in minutes. The planned effort will involve a more moderate dose rate over a six month period. The goal is to determine whether an oxygen-free environment will be necessary at the SSC.

Splicing research and development

The splicing of scintillating fibers to clear waveguide fibers has been successfully done in the laboratory by thermal fusion, adhesives, solvent fusion, and optical grease in a tight fitting sleeve. When carefully done, all of these methods have shown transmissions greater than 95%. For the fiber tracker, it is necessary to consider the requirements of both large scale utilization and the organization of fibers into linear ribbons. The ideal solution would be a quick disconnect linear structure that joined several thousand fibers to their waveguides with that same 95% transmission achieved in the lab. The R&D work planned is aimed at designing the splicing technique and sequence for joining barrel fiber ribbons to the clear waveguides.

Fiber manufacturing engineering

The technique of fabrication is a very important factor in the production of scintillating fiber of adequate light yield and attenuation length. Diameter control is crucial to the final assembly into ribbons. The work planned is a systematic engineering study of the process variables including integration of QA steps in an automated way to optimize yield and quality.

The process variables include molecular weight profile of the polymer, fused versus non-fused preform cladding, preform temperature during drawing, drawing speed and tension, normal versus oxygen free environment, and diameter of the takeup spool. A collaboration with industry is foreseen with preforms provided by the SDC and pulling towers and QA instrumentation provided by industry. During the study, a significant amount of fiber will be produced, up to 300 km being envisioned.

Ribbon fabrication engineering

Initial attempts to produce fiber ribbons of good quality by winding fibers under tension on a registered drum have been successful. This represents but one approach to ribbon manufacture. Other approaches include winding on fixtures similar to those used with wire chamber winding machines and placement on registered planar frames. The choice of technique may well influence other parameters such as the type of adhesive and the need for a backing layer.

Small scale engineering and prototype studies are planned for all techniques so that the best technique can be selected by comparison of the results from several methods. Subsequently, a production design will be engineered appropriate to large-scale manufacture. Appropriate QA issues will be addressed by the design as well.

Engineering for placement of scintillating fibers into superlayers

Conceptual designs for fiber tracking in the central barrel region and in the intermediate angle region were initiated in FY1991. A key issue is the design of the support structure (*e.g.* stable base cylinders for the barrel region). Subsequently, the next phase calls for development of appropriate techniques for placing fibers or ribbons of fibers (or even modular multilayer structures) onto the supports with adequate registry. Tooling, fixturing, and automated procedures including real time alignment instrumentation are included in the design effort. The principal design responsibility will reside with ORNL.

For the barrel, a prototyping effort is planned which will place fibers on comparable (or actual prototype) cylinders to test methodology, accuracy, and technique. The unique features for SDC application will be included: light tighting that allows for the flow of dry nitrogen providing an oxygen-free environment, and excellent thermal control to minimize linear expansion in the 4 m long assemblies.

The intermediate angle region uses a disk format to support fibers in a plane perpendicular to the beam. Both the pattern of fibers, from radial to spiral, and the number of layers per disk present significant placement challenges. It is essential to develop the conceptual design for disk superlayers and to build several prototype structures to validate the concepts.

Readout engineering

The basic element of the readout system is a solid state VLPC which exhibits the high quantum efficiency (~80%) and high gain ($\sim 3\times10^4$) required for readout of long tracking fibers. VLPC devices operate at 6 to 7° K and require special techniques for packaging, biasing, and photocoupling in a cryogenic environment. It is expected that a costed conceptual design for the VLPC readout will be completed

Table 4
Scintillating fiber R&D and engineering

Milestones and Goals	Date
1. Scintillating fiber R&D	
Selection of scintillator composition	6/92
Selection of active cladding material	6/92
Resolution of oxygen/radiation issue	4/92
2. Waveguide R&D	
Selection of the waveguide composition	1/92
Selection of cladding material	1/92
3. Splicing R&D	
Selection of splicing technique and sequence	8/92
4. Fiber manufacturing engineering	
Optimization of fabrication process	9/92
Development of automated Q/A apparatus	1/93
Production of significant quantities of fiber	2/93
5. Ribbon fabrication engineering	
Selection of ribbon fabrication technique	8/92
Engineering design of production facility	1/93
Determination of Q/A procedures and equipment	1/93
6. Readout engineering	
Conceptual design for the readout system	1/92
Fully functional prototype	10/92
Operation of a 1 K fiber/VLPC prototype system	1/93
Operation of a 10 K fiber/VLPC prototype system	1/94
7. Fiber placement onto superlayers	
Stable-base cylinder prototype development and construction	9/92
Engineering of placement concept	6/92
Construction of placement facility	1/93
Placement of fibers onto superlayers of prototype cylinder	6/93

in late 1991, the effort will shift to the next phase in FY1992, which involves engineering design and prototyping. Close interaction will be necessary between the engineering design effort and the prototyping work to benchmark engineering parameters and operating conditions as the design proceeds.

The concept calls for a cryostat unit which contains 16 independent units or modules that can be independently removed or inserted. Each module would contain 1024 VLPC pixels and provide an appropriate optical quick disconnect and multipin electrical connectors. Only the VLPC's themselves would be cold, the amplifier-shaper-discriminator circuits being operated warm. The design will include a diagnostic/calibration interface.

5.3.3. R&D for gaseous intermediate angle tracking

Development work aimed at establishing the optimal technology for a gas-based intermediate angle track detector (ITD) is in progress. Two technologies have been considered: radial wire drift chambers and gas microstrip chambers.

A full-scale radial wire chamber single cell has been constructed and tested to establish the basic

operational characteristics. However, the suitability of radial drift chambers at the design luminosity is highly marginal. This has led to consideration of small gas microstrip devices of both planar and non-planar (knife-edge) design. These are now under construction and test. Excellent (12% FWHM) pulse height resolution at rates up to 10^7 cm^{-2}s^{-1} has been achieved for planar electrode geometry on glass substrates. Other substrates such as silicon, plastics, and different glass formulations are also under study. All of the above work has been done by SDC collaborating institutions. In addition, there are many institutions and universities throughout Europe, the US, and Japan also engaged in such work, one of whom (Pisa) already has a system operational in a CERN experiment. We are in close contact with most of them and are collaborating with some of them.

Simulation work is being undertaken in parallel with hardware development to achieve an optimal layout of either a microstrip system or a hybrid of microstrips and radial wire chambers in conjunction with the inner silicon tracker. The use of radial wire chambers alone has now been ruled out because of the prohibitively large occupancy in the full (single hit) memory time of a chamber with a feasible number of drift cells, and because of the need for a fast Level 1 trigger in p_t at intermediate angles. A hybrid system in which both the speed and the spatial accuracy of microstrips are used to tag the long radial chamber memory time into a time slice associated with an interesting bunch crossing remains a possibility. If simulation demonstrates that the advantages of precision drift measurements for track finding and reconstruction are no longer significant when considered in conjunction with the microstrips and inner silicon tracker, then a gas microstrip system alone could be chosen for the ITD. Furthermore at high luminosity ($\gg 10^{33}$ cm^{-2} s^{-1}), only a microstrip-based system remains a feasible option.

Engineering of a full scale detector design and R&D to determine the appropriateness of each technology option for use in the SDC detector are the main themes for our FY1992 plan. We propose to continue to develop working elements of the detectors with the actual cell dimensions required for the detector, and to complete initial design of a set of gaseous intermediate tracking detectors including engineering support, alignment, cooling and detector integration.

The milestones and goals for ITD development work are shown in Table 5. They include overall engineering studies to specify support and infrastructure of two ITD's in the SDC detector.

5.3.4. Outer tracker engineering plan

We summarize here our plans for mechanical engineering and alignment work to be done for the outer tracker in FY 1992.

The engineering projects are divided into three categories: 1) basic support structure for the outer tracker, including considerations of interfaces with the silicon tracker and intermediate tracker and overall support and assembly of the detector; 2) issues related specifically to the placement and alignment of straw tubes into superlayers; and 3) the issues related to the assembly of scintillating fibers into superlayeers. Tasks (2) and (3) are discussed in the respective technology sections above.

Basic support structure

The following list of tasks have been identified as critical to meet the schedule for the SDC outer tracker.

- Cylinder design–analysis of support cylinders for the tracking elements, determination of precision limitation (finite element analysis), and development of fabrication techniques for stable suppport cylinder.
- Cylinder prototype fabrication–fabrication of one prototype carbon-based composite cylinder, 6 to 8 m long and 1.5 m in diameter.
- Support structure design–design and analysis of the support structure designated to attach the superlayers to one another and to the exterior mounting interfaces.
- Support structure protype–fabrication and assembly of a prototype of the support structure and mock-up of the cylinder and mounting interfaces.
- Assembly concepts–analysis and research into fabrication methods and assembly sequence for the central tracking chamber structure.
- Alignment methods–development of techniques for alignment of the CTC components to the required tolerances and for maintaining those tolerances.
- Tooling design–design of tooling necessary to allow constrtuction of the CTC.
- Fixturing design–design of fixturing necessary for handling and mainpulating the CTC during fabrication and installation.

- Development of intermediate tracker support
- Development of alignment techniques for intermediate-central tracker registration
- Development of 3D model of entire structure.

Table 5
Milestones and goals for gas microstrip detectors

Goal	Date
Find stable and thin substrates	1/92
Choose optimum metallization thickness	1/92
Develop bonding to front-end electronics	1/92
Measure pulse shape from min I.	1/92
First measurement of efficiency	1/92
First layout drawings	1/92
First cost estimate	1/92
E-CAD design front-end electronics	4/92
Radiation hardness and aging	8/92
Optimize gas composition	8/92
Working devices $\approx 15\times20$ cm	8/92
Detailed layout of support structure (includes gas, cooling etc.)	8/92
Refine cost estimate	8/92
Measure efficiency, rate capability, resolution	8/92
Tested front-end electronics	10/92
Final E-CAD design for front-end electronics	10/92
Completed engineering study	10/92

Table 6
FY1992 tracking system budget

Tracking design task	Institution	Requested (K$)
1. Silicon tracker		
Front-end electronics	KEK,* LBL, U. Oxford,* RAL,* and UC Santa Cruz	950
Mechanical design and prototype construction	LANL and LBL	2060
Detector development	Hiroshima U.,* Johns Hopkins U., KEK,* U. New Mexico, U. Pittsburgh, UC Riverside, UC Santa Cruz, and others	210
Management and cost/schedule estimates	LBL and LANL	180
	Subtotal	*3400*
2. Barrel tracker		
a. Straw tubes		
Basic drift tube R&D	Duke U., U. Indiana, and others	130
Prototype construction and test	Duke U., U. Indiana, and others	175
Straw placement engineering and manufacture	ORNL, WSTC, and others	175
Termination, endplate design, and prototypes	U. Colorado, ORNL, and others	120
Aging studies	LBL, TRIUMF,* and others	40
	Subtotal	*640*
b. Scintillating fibers		
Scintillating fiber and clear fiber R&D	FNAL, Florida State U., U. Illinois at Chicago, Northeastern U., U. Notre Dame, Purdue U., and industry	200
Fiber and ribbon manufacturing	Bicron, FNAL, Northeastern U., U. Notre Dame, ORNL, and Purdue U.	150
Fiber placement and prototype fabrication	U. Notre Dame, ORNL, Purdue U., and WSTC	105
VLPC system engineering	UT Dallas, UC Los Angeles, FNAL, Purdue U., and Rockwell	300
	Subtotal	*755*
c. Common engineering and cost/schedule		
Support structure and system engineering (common to straws and fibers)	ORNL and WSTC	800
Management and cost/schedule estimates	ORNL and WSTC	180
	Subtotal	*980*
3. Intermediate tracker		
Work on plastic substrates for microstrip detectors	Carlton U.,* CRPP (Ottawa),* KEK,* LANL, U. Liverpool,* RAL,* U. Rochester, and Texas A&M	*125*
	Total	*5900*

*Foreign budget not included.

Table 7
Division of responsibilities for the solenoid

Japan	Both	United States
Conductor development	Magnetic calculations	Vacuum vessel
Coil design	Magnetic forces	Chimney design
Coil Winding	Quench analysis	Coil support design
Prototype coil outer	Assembly of prototype	Cryogenics design
Support cylinder	Testing of prototype	High-current supplies
	Design report	Prototype cryostat

6. Superconducting solenoid

The R&D program for the solenoid has been divided between KEK and FNAL. KEK is developing an improved superconductor and is working on the coil design and the coil winding. FNAL has assumed the tasks of designing the vacuum vessel, chimney, control dewar, transfer line, and a cold-mass support system. FNAL is also designing the helium/nitrogen cryogenic system in conjunction with the SSCL, and is investigating high-current electrical equipment.

A full-diameter, quarter-length prototype coil and cryostat will be designed, fabricated and tested in the next three years. KEK will provide the coil and outer support cylinder, while FNAL will provide the supports, the radiation shields and the vacuum vessel. FNAL and KEK will work together on the assembly and on cryogenic and electrical testing of the prototype, and will then collaborate in writing a design report to be used for procurement of the final magnet.

6.1. FY1990 and FY1991 R&D

The solenoid technical feasibility is based on extrapolation from current magnet technology. However, the solenoid is one of the most critical elements of the SDC detector and the technical risk must be minimized in order to avoid any possible catastrophic failures in the process of manufacturing as well as in its operation. The solenoid being designed can be used with or without ferromagnetic endcap return yokes. One of the advantages of this concept is that a full excitation test can be done at the manufacturer. The following items need to be clarified before the construction of the real magnet can begin:

1. Supporting method of axial electromagnetic force (1700 tons),
2. Aluminum stabilized superconductor with a large aspect ratio,
3. High-strength aluminum stabilizer and moderate RRR,
4. Use of honeycomb structure for vacuum vessel.

The conclusion of our study in 1990–1991 was that the best way to pursue these R&D items is to construct a prototype solenoid with full diameter but one-quarter the length of the actual one. An equivalent electromagnetic force can be realized in the prototype magnet if one excites it with 1.5 times the current of the full magnet. Through such cooling and excitation tests, it is possible to obtain

1. Verification of higher (storage energy)/(mass) ratio of 7.0 to 7.5 kJ/kg,
2. Verification of support against hoop and axial stresses,
3. Verification of stability against quench and performance after quenches,
4. Feasibility of aluminum honeycomb vacuum vessels.

In addition, one can develop and verify the method of coil winding as well as the superconductor properties for the real magnet through the construction of the prototype coil since its diameter is the same. The initial investment is naturally higher due to the challenge of building to the full diameter, but this will eventually be compensated in the construction of the real magnet.

The responsibility for the superconducting solenoid is shared between Japan and the United States. The division of responsibilities in 1991–1992 is shown in Table 7.

KEK has been working for about two years on the development of a high-strength, low-resistivity

Table 8
Superconducting solenoid FY1992 plan and budget

Solenoid design task	Requested (K$)
1. Prototype coil: Vacuum vessel, radiation shield, tests	400
2. Final coil: Support design, magnetostatics, integration with other detector components	100
3. Final coil: Cryogenic design and related items	100
Total	*600*

Al/Cu/Nb-Ti composite conductor. A conductor with a yield strength of 8.5 ksi at 77 K and an RRR of 1200 has been achieved. A preliminary coil design has been made by Toshiba. Toshiba has also developed a machine to wind the conductor on the inside of the outer support cylinder, and has done some practice winding.

Design of a "thin" outer vacuum shell has been a major thrust of the FNAL R&D program in this period. The thickness of the vacuum shell, if fabricated of solid aluminum plate, would be about 0.28 X_0 (radiation lengths); the goal is to reduce that value substantially. Many different materials were investigated. Special emphasis has been placed on aluminum honeycombs, carbon-epoxy composites and aluminum isogrid. Because an all-metal, welded shell has been judged as more reliable than glued materials, a contract was placed with PS Associates, Inc. for a feasibility and preliminary design study of aluminum isogrid. That study was completed and showed that an isogrid shell with an effective thickness of 0.213 inches (0.060 X_0) satisfied the design requirements.

A 12-inch diameter vacuum jacket around the cryogenic lines has been shown to provide adequate pumping and overpressure relief of the magnet cryostat. The preferred route for this chimney is straight up through the calorimeter and the muon system.

Cold-mass support systems have been investigated. A Warren truss at one end with a system of radial supports on the other end is the present system of choice. The cold-to-warm support elements will be made of carbon-epoxy composite for minimum perturbation to the calorimetry.

The heat loads to the 4.5 K and 80 K systems have been calculated and the helium refrigerator sized. Several methods of flow-cooling the coil have been considered. A preliminary cross section of the transfer line leading from the surface facilities to the magnet has been generated for costing purposes.

The availability of high-current electrical equipment has been investigated and possible vendors identified for the 10 kA power supply, dump switches and dump resistors. The water-cooled bus leading to the surface has been sized.

The magnetostatic capabilities of ANSYS have been used to study the effect of calorimeter geometry on the coil forces for a calorimeter containing iron. A method of using ANSYS to follow quench propagation and calculate coil temperature as a function of time after a quench has been developed.

A major emphasis of the FNAL R&D FY1991 program has been the design of the cryostat and support system for the prototype coil being built in Japan. The coil will have a mean diameter of 3.6 m and will be about 2 m long. FNAL will fabricate the vacuum vessel, utilizing an aluminum isogrid for the outer shell. PS Associates will complete the design of the shell and the attachments to the flat annular plate on the ends. Scale models of the isogrid shell will be fabricated and tested to verify the design. Prototype composite and metal support elements will be fabricated and tested. The radiation shields and support intercepts will be engineered and designed.

6.2. FY1992 R&D plans

In FY1992 the construction of the prototype coil will begin and engineering design of the full-size coil will continue. The breakdown of the US tasks to be carried out by FNAL, together with estimated costs, is given in Table 8.

7. Calorimetry

The calorimeter for the SDC detector consists of a central calorimeter covering the pseudorapidity range $|\eta| < 3$ and forward calorimeters covering the pseudorapidity range $3 < |\eta| < 5.5$. The design goals for the calorimetry have been described previously in the Expression of Interest and Letter of Intent submitted to the SSCL last year. In brief, the calorimetry is designed to provide hermetic coverage for missing energy determination, to provide jet energy and angular resolution sufficient to meet the physics demands at the SSC, to provide electron/photon identification and energy measurements (in conjunction with the inner tracker), and to provide the primary trigger information for electrons, photons and jets.

At the time of the Letter of Intent there were two options for the central calorimetry: lead/iron absorber with scintillating tile-fiber readout and lead absorber with liquid argon readout. Many options were under investigation for the forward calorimetry: liquid argon, warm liquid, liquid scintillator, and high-pressure gas devices with lead/iron absorbers. For the central region we were also investigating the use of either a preshower (preradiator) detector or a fine-grained detector at shower maximum to aid in electron identification.

Since submitting the Letter of Intent we have studied more fully the basic calorimeter requirements (depth, segmentation, ...), continued and expanded the R&D and beam test program for scintillating tile, liquid argon and warm liquid calorimetry, completed preliminary conceptual engineering designs for both scintillator and liquid argon central calorimetry and have improved our cost/schedule estimates for calorimetry in general.

A selection of technology for the central region with the choice of the scintillator option was made in September. Since the construction period for the forward calorimetry is less than for the central region, a longer period of R&D and conceptual design is possible. In FY1992 we will nevertheless narrow the technological options, continue fundamental R&D, and develop plans for prototype construction leading to beam tests. Conceptual engineering design of the forward calorimetry must continue, since the design of the forward calorimetry has substantial impact on the design of the endcap region of the central calorimetry and on assembly and access for the entire detector. We do not expect to make a final choice of technology for the forward calorimetry in FY1992.

7.1. Choices of technology for calorimetry

7.1.1. Choice of technologies for central calorimetry

Based on our studies and tests, our choice for the central region is the scintillating-tile fiber-readout option. The composition of the absorber for the hadronic section remains to be selected. This choice is influenced by physics requirements (*e.g.* compensation requirements), cost, field uniformity and its effect on tracking, and by consideration of magnetic forces on the superconducting coil. Beam tests are under way to study the response of a calorimeter with different amounts of lead and iron absorber. Studies of the other aspects are also well advanced. The selection of absorber type is to be made by the end of November 1991. A plan for the R&D and engineering effort on tile-fiber calorimetry is presented below.

We have considered the use of either a preradiator or a shower maximum detector (SMD) to aid in electron identification. Our choice is a fine-grained detector at shower maximum. This will consist of crossed strips of scintillator read out by fibers.

7.1.2. Choice of technologies for forward calorimetry

The forward calorimeter is substantially smaller than the central calorimeter, and its goals are more modest. Its primary function is to provide hermetic coverage for missing transverse energy measurements, and it may also be used to tag the presence of forward-going jets. Electron identification will not be made in this region. Particle densities are large, and radiation damage is a critical issue. To date we have not identified a preferred technology, and we will not do so until requirements are better defined and further studies are completed. By February 1992 we plan to narrow the options under consideration to no more than two choices.

7.2. Central scintillator calorimetry

The basic layout of the scintillator option is shown in Fig. 4. In the present design there are about 10,000 towers with the following longitudinal depth segments: one in the electromagnetic section of the barrel and two for the endcap, and two segments in the hadronic sections (HAC1 and HAC2) of both barrel and endcap. The potential exists to upgrade the barrel EM section to two depth segments.

The depth at $|\eta| = 0$ is about 9 interaction lengths (λ_I) and is appropriately scaled with pseudorapidity, reaching 11–12 λ_I at $|\eta| = 3$. In addition to the major choice of absorber type, all of the design details remain to be fixed during FY1992. Tower size, sampling fraction, *etc.* will be finalized through an iterative process involving physics requirements, performance, cost, and engineering feasibility.

A number of engineering options for the absorber structure are being pursued. For the electromagnetic section we are investigating both a conventional lead-plate structure and the casting of an entire module. The hadronic section absorber may be cast-lead followed by a steel punched-lamination or plate structure, or the entire hadronic section may have steel absorber. The transition point between HAC1 and HAC2 will be chosen on the basis of simulations and results from the hanging file test-beam run, but may occur as early as 4 λ_I.

Clearly, any combination of the cast-lead *vs.* lead plate and laminations *vs.* iron-plate fabrication techniques can be used, whether the front section of the hadron calorimeter is chosen to have lead or iron. The absorber choice and fabrication technique are separate issues. The fabrication technique will be chosen on the basis of cost and performance.

7.2.1. R&D for the scintillator option

The primary R&D issues for the scintillator option are discussed in this section. Many are common to both the tower and SMD parts of the calorimeter.

1. Compensation and absorber studies

Beam tests of a "hanging file" calorimeter are underway at FNAL. The device consists of 1 m^2 absorber plates and scintillator tiles that are hung from rails to permit easy rearrangement. The tiles are 3 mm thick with waveshifter fibers on 5 cm centers. Each of the more than 100 tiles has its own PMT and associated readout electronics. Most of the absorber is in the form of 3.2 mm plates, and 12 λ_I each of iron and lead are available. Aluminum and G10 plates are also available. Compensation of pure iron and lead systems will be studied as a function of absorber thickness. Of even more interest are the compensation properties of composite absorbers, *e.g.* iron with a lead core, or lead with aluminum or G10 cladding. Variation of composition with depth will be studied, as will a variety of other problems such as albedo losses. The array is presently being commissioned, and will obtain data through the fixed target run that will continue until the end of 1991. The results will be an important part of the input in choosing the absorber configuration for the scintillator/tile readout calorimeter.

2. Scintillator development and radiation damage studies

The effort has several major components: continued development of scintillators and waveshifter fibers with improved radiation resistance, source tests of bulk scintillator, and exposures of special electromagnetic modules to electron beams to determine radiation damage. In addition, work is continuing on the development of materials with improved radiation hardness and of faster waveshifting fibers.

For radiation damage studies, twenty mechanically identical EM test modules have been built. The basic module is 20 radiation lengths (X_0) deep, and consists of 20 sheets of lead separated by tile/fiber assemblies. The fibers are viewed by a single photomultiplier. A "standard" module consisting of polystyrene base plastic with Y7 shifter fiber without glue and in an air atmosphere is under test at the various sites. Variations in base plastic, shifter, atmosphere, temperature, and glue will be made separately, so as to isolate the relevant parameters in the problem of radiation damage. Six modules are in Beijing, two are at KEK, and two are at Saclay. These modules have been exposed to total doses of a few Mrad. Preliminary results from these exposures have established that the barrel section of the calorimeter will provide adequate performance at equivalent dose corresponding to about ten years at $10^{34}\,cm^{-2}s^{-1}$ with presently available scintillators (SCSN81). Results from these initial exposures have helped determine the choice of plastics and ambient conditions for the second round of tests that have commenced in the fall. The dependence on damage of atmosphere and dose rate will be studied. We are working with chemists at Sandia Laboratories and elsewhere to understand how to extrapolate from the relatively short exposures at high dose rates in source and beam tests to the almost continuous low-rate exposure at the SSC.

The radiation damage test program initiated in FY1991 will be continued in FY1992 to begin studies of the long-term performance of the irradiated test modules. These data will be incorporated into a model of damage effects that is intended to predict long-term performance of the calorimeter. Finally,

as materials, fabrication and assembly techniques are improved, they will be incorporated into new test calorimeters and tested as beam time allows.

The scintillator development program is tightly coupled to the tasks described above and to the design of the overall optical system. One element of this program is the continued work with commercial manufacturers (Bicron, Kuraray, and Dow Corning) to encourage their development of fluors and plastic bases with increased resistance to radiation. The bulk irradiation properties of these materials will be measured using facilities at several sites. The major responsibility for scintillator R&D for the SMD rests with the Saclay group. Initial irradiations with ^{60}Co were made to choose between various candidates for the base plastic and shifter fibers. These choices were the basis for the "standard" modules and test program described above.

Irradiation studies using radioactive sources are being made at Florida State, KEK, U. Michigan, LSU, and ANL, and will continue in FY1992. The electron beam tests will be continued at two sites in FY1992, KEK and IHEP/Beijing. SMP tests will be made at Orsay. Incorporation of these data into a model describing long-term degradation is the responsibility of Sandia Laboratory.

The final element of this program is to provide materials for the optical system development described below.

3. Optical system design

This task entails precision measurements of the tile/fiber uniformity of response and the reproducibility of the response from assembly to assembly. Masking techniques have been developed in the FY1991 program and these will be further optimised to determine the most cost effective-solution. Work on mapping and masking is proceeding at ANL, FNAL, and Tsukuba.

Fiber routing affects the light yield, and, as a result of the stresses introduced in bending the fibers, may also affect radiation resistance. Studies of both ageing and performance following irradiation of the completed assembly at a variety of dose rates and total doses will be made. These data will be useful in addressing issues such as annealing and cumulative degradation.

The responsibility for design of the SMD scintillator assemblies will be borne by Saclay with close cooperation with US and Japanese groups.

4. Calibration system design

Three complementary calibration methods are proposed:

1. Light pulser calibration. Pulses from an ultraviolet N_2 laser will illuminate a fast scintillator in which fibers are imbedded. These fibers guide the light to individual PMT's. This system would monitor the relative gain and stability of the PMT's and the subsequent circuitry. Most of the test goals could be met by an alternative LED pulser system. Cable and fiber routing must be well conceived so as to maintain hermeticity of the calorimetry. SSCL and UTA will be responsible for the conceptual design.
2. Source calibration. A ^{137}Cs source is mounted on the end of a long steel wire that is guided to a given tile through a plastic tube. Via a "Gatling gun" switching arrangement, it can be routed to a large number of different tiles. It monitors the entire system, including radiation damage, ageing effects, gain changes, *etc.* Measurements of the PMT current are observed to be stable to at least 2%. Such a system is also being used to track the radiation induced non-uniformity in the test modules at FNAL, Beijing, and at Saclay. Most of the development is being done by Purdue U and the SSCL.
3. The ultimate calibration of the SDC calorimeter will be based on SSC colliding beam events. The calorimeter can be calibrated using the abundant γ-*jet* events, electrons from $Z \rightarrow e^+e^-$ events, isolated pions whose momenta are measured in the central tracker, *etc.*

In FY1992, we will complete plans for the detector calibration. This includes verification that the proposed scheme meets safety and operational requirements. A prototype box that dispenses and stores the sources will be designed and built.

5. Photodetector specification, high voltage design and interface with electronics

These issues are closely coupled. Phototube specifications for the tower readout must be developed in detail. These are connected to the design of the optical system, since radiation resistance may be improved by using waveshifter fibers with longer wavelength output than is now the standard. A conceptual design of the high voltage system and the interface of the phototube/HV system with the

electronics for the calorimeter must also be completed in FY1992. Requirements on noise, linearity, and dynamic range will be specified. Specification and evaluation of PMT will be the responsibility of FNAL, ANL, and Fairfield. The HV system is being developed by FNAL, VPI, UTA, and Moscow State U. Prototype "charge pump" bases will be in place with "default" PMT's late in the 1991 hanging file beam tests.

The photodetector for the SMD is also to be specified in FY1992. Groups in the United States will assume the primary responsibility for evaluating photodetectors. Those under consideration include multi-anode phototubes, avalanche photodiode arrays, VLPC's and phototubes with silicon detectors. Preliminary evaluation of these systems will be made in beam tests during 1992. The issue is largely cost, since the requirements on energy measurement, given the shower fluctuations at shower maximum, are modest.

7.2.2. Prototype development and engineering

Prototype development and testing during FY1991 concentrated on the production of a prototype barrel electromagnetic module produced by lead casting and the production of an iron hadronic module prototype using punched laminations as the absorber. Both of these prototypes will be tested at FNAL during the current fixed target run.

Casting was explored as a fabrication technique for the lead calorimeter structure because of the possibility that lead cast into a stainless steel shell might provide better hermeticity than a structure with lead plates supported by I-beams. Tolerances on absorber thickness, mold fabrication, and lead "creep" are the issues to be addressed.

Conventional plate fabrication techniques (*e.g.* in CDF where lead plates are supported in compression directly on scintillator tiles and in ZEUS where uranium plates are separated by I-beams and bound together on the exterior surface by tensioned wire) are also being studied.

Iron offers the possibility of simultaneously providing an inexpensive calorimeter absorber, solenoid coil support, tracking support, and magnetic flux return. The main problem is that such a calorimeter is noncompensating, *i.e.* the responses to electrons and hadrons of the same energy are different. Monte Carlo studies of this problem are under way at FNAL and ANL.

Engineering efforts are underway at ANL, FNAL, LBL, SSCL, and WSTC. The aim of these efforts is to provide a complete cost estimate and engineering analysis of the engineering options by December 1991. After a decision is made, a common baseline design will be pursued for the remainder of FY1992. Procurement of materials will then begin, with the goal of having a preproduction prototype completed early in FY1993.

FY1992 engineering tasks are as follows:

1. Development of a preliminary engineering design of a barrel EM module, with production of detailed drawings for the fabrication of a prototype.
2. Development of a preliminary engineering design of a barrel HAC module with production of detailed drawings for the fabrication of a prototype.
3. Design of fixturing. A variety of fixtures are needed. For example, clips will be needed to hold the tile assemblies in the wedge. Brackets are needed to hold fibers in their routes. As part of the costing exercise, many specialized fixtures to be used in fabrication and transportation need to be designed.
4. Continuation of the calorimeter engineering design optimization for cost and performance. This effort will focus on such aspects as fabrication methods, fastener choices, fastening technique, and piece count reduction for the module frame assembly.
5. Integration of the EM and HAC sections of the calorimeter. Mechanical tests will be made in parallel with fabrication of a full length barrel EM + HAC pre-prototype module.
6. Structural Analysis. The solenoid field interacts with the magnetic "termination" provided by the steel in the endcap and barrel calorimeter. Optimization of the steel location taking into account field uniformity (tracking, triggering), forces on the solenoid (supports, material, hermeticity), and calorimeter performance will be studied. ANSYS runs will be made that include magnetic and gravitational loads.
7. Industrialization of the tile/fiber manufacturing: The cost of manufacturing and assembling hundreds of thousands of tiles and tile/fiber assemblies is a large fraction of the total calorimeter cost. Our present detailed estimate is based on a direct extrapolation of the "hand-crafted" techniques used to build the CDF endplug upgrade

module. Industrialization studies by FNAL will be pursued to evaluate the feasibility of lowering costs and improving yield.

8. Mechanical integration of calorimeter elements with other detector subsystems will be continued.
9. Support and integration. The steel hadronic calorimetry provides a structurally sound attachment point for two support structures. As part of the detector integration effort, design of the supports for the solenoid coil and the tracking volume will be continued. Work begun in FY1991 on a support structure for the calorimetry, which rests on the muon system steel, will be continued. The "readout crack" containing services for detector elements inside the calorimeter volume will also be optimized.
10. Services. It is possible that the scintillator will require a nitrogen or other inert atmosphere in order to minimize radiation damage.
11. PMT mechanics. Each PMT requires a magnetic shield and a support bracket. Cable routing of signals and services (HV) must also be designed. There must be provisions for making the entire assembly light-tight.
12. Repair/refurbishment. It is likely that the endcap EM section will need to be "remasked" over the lifetime of the experiment. It is also necessary to provide for the possibility of replacing some fraction of the scintillator in the EM section of the endcap.

If both HAC1 and HAC2 have iron absorber, most of the engineering tasks remain the same. However, both would be contained in a single structure. The EM section may be either assembled from lead plates or cast lead.

For the remainder of FY1992, the effort will concentrate on continued engineering of the chosen design. Both the barrel and endcap designs will be pursued. A prototype barrel wedge will be designed. Fixturing for transport and manipulation will also be designed. Test equipment and materials (absorber, scintillator plate, fibers, PMT) will be procured for the prototype wedge. The goal is to procure long lead-time items for the prototype in FY1992 so that fabrication and assembly can proceed early in FY1993. The aim is to have a functional full-scale ($\sim$50 metric tons) wedge assembly, with an SMD, and with transducers/readout in place, for tests in a beam by mid-FY1993 at the latest.

ANL, FNAL, LBL, SSCL, and WSTC will be responsible for mechanical engineering in FY1992.

7.2.3. Engineering for SMD

The major mechanical engineering effort will take place at Saclay. The US effort in FY1992 will be aimed at producing (with Saclay) a full design and cost estimate for the SMD. As with the rest of the calorimetry, the goal is to have a prototype in place in a test beam in FY1993. In the US the effort will concentrate on R&D areas, namely the transducers and preamplifiers.

The chosen transducers will be integrated into the design selected for the main calorimetry, and mounts and other needed facilities will be designed.

The number of SMD channels is at least as large as the number of calorimeter towers. The problem of signal and other cable layout must be addressed in an integrated way with the rest of the calorimeter.

7.3. R&D for forward calorimetry

The coverage of the central calorimeter extends to $|\eta| = 3$, or 5.7°. For the detector to meet its physics goals, missing-E_t coverage must extend for at least two more units of pseudorapidity. We intend to extend the fiducial limit to $|\eta| = 5$, which means extending the physical boundary of the active region to $|\eta| = 5.5$ (0.5°) or possibly $|\eta| = 6$ (0.3°). Special problems of this region include

1. Radiation damage. Since the dose varies as the inverse square of the distance from the interaction point (IP), damage is minimized by placing the forward calorimetry as far as possible from the IP.
2. Albedo flux (mostly neutrons) that contributes to the flux in the central region. Again, the calorimeter should be as far as possible from the IP.
3. Angular (or η) resolution degradation because of the lateral size of cascades. Again, this argues for a large distance from the IP.
4. The need for continuity in acceptance and performance with the central calorimeter. The discontinuity at $|\eta| = 3$ should be as invisible as possible.
5. The design must include provision for shielding the intermediate-angle muon chambers from albedo particles from the forward calorimeter.
6. Provision must be made for moving the forward calorimeter along the beam pipe to allow access to the central tracker and other parts of the detector.

7.3.1. Forward calorimeter progress in FY1991 and plans for FY1992

An SDC task force has been formed to study these problems. In this section we summarize its progress to date and the R&D plans for FY 1992.

The simplest geometrical solution is the improved conical plug shown in Figs. 1 and 2. It has been moved inward, as compared with the LoI design, to expedite access to both the inner detector and the final-focus quadrupole. Performance at the $|\eta| = 3$ interface can be improved by instrumenting the conical-shell shield. The logical extension of this approach is a conical-shell calorimeter that closes with increasing distance from the IP, an "inverse cone." These and other possibilities have been simulated, although further work is needed before a choice can be made. Substantial simulation effort will continue at U. Florida, Iowa State, LBL, U. Toronto, and York U. It is expect that a geometry decision will be reached in early FY1992.

The radiation/occupancy situation becomes much harsher with increasing $|\eta|$, the incident particle flux varying as $\cosh^2 \eta$ and the dose almost as $\cosh^3 \eta$ at fixed distance from the IP. At $|\eta| = 3$ the situation is somewhat better than at the edge of the central calorimeter, because of the increased distance (in the "plug" design), but at $|\eta| = 6$ the dose will exceed 200 Mrad yr^{-1} at the nominal SSC luminosity. It is therefore conceivable that the readout technology might change at some intermediate angle, perhaps to one with a shorter nuclear interaction length and a different sampling option.

Sampling options have received considerable attention, and the goal in FY1992 is to narrow the field to a final choice—or choices, if a technology change at small angles is preferred. Ongoing work includes the following:

1. Liquid scintillator. As with other liquids and with gases, radiation damage is managed by circulating the fluid, along with some combination of purification and replacement. Part of the problem is to find comparatively radiation-resistant transparent dielectric tubes through which to circulate the scintillator. Design and testing of materials and prototype "liquid SPACAL" calorimeters is underway at several institutions, and will continue in FY1992.
2. Liquid argon. Here the problems are charge buildup and radiation damage to the structures and preamplifiers, both the result of the high instantaneous rates. The goal in FY1992 is to provide a design that is sufficiently detailed for meaningful comparisons with alternate proposals.
3. Warm liquids. Much of the WALIC collaboration's effort is directed toward forward calorimetry. Their "hanging file" beam tests are presently under way at FNAL.
4. High pressure gas. The gas is circulated. The "Texas tower" effects that result from a low sampling mass fraction are reduced by the use of very high pressures. The ongoing study focuses on rate and charge buildup problems. A prototype module is being built, the first cell of which will be used for mechanical/structural testing. In FY1992 a full-scale cell could be built to test its mechanical and electrical structure.

The forward calorimeter effort is now being reviewed and detailed milestones remain to be determined.

Table 9
FY1992 calorimetry budget

Calorimeter design task	Institution	Requested (K$)
1. Central calorimetry—scintillator/tile option		
a. Scintillator development, readout, and calibration		
Radiation damage tests, including beam tests of modules	ANL, Beijing U.,* Erevan Inst.,* Florida State U., FNAL, LSU/SU, Michigan, U. Mississippi, Rockerfeller, Saclay,* and Tskuba U.*	350
Scintillator development	ANL, Bicron, FNAL, U. Florida, and Sandia Labs	440
Optical system design and tests	ANL, Florida State U., FNAL, LBL, LSU/SU, Purdue, U. Rochester.	400
Calibration systems	Purdue U., SSCL and UT Arlington	200
PMT specifications and tests	FNAL, LBL, UT Arlington, and Virginia Polytechnic Inst.	100
	Subtotal	*1490*
b. Hadronic shower simulations	Iowa State, ORNL, U. Tennessee	*60*
c. Shower maximum detector		
Scintillator design and test	Saclay*	
Readout evaluation—APD, VLPC, ...	UC Los Angeles, Northeastern U., Rockerfeller U., and Yale U.	300
Engineering of readout system including prototype	UC Los Angeles and FNAL	100
	Subtotal	*400*
d. Preliminary engineering design, industrialization of tile/fiber manufacturing, and prototype construction	ANL, FNAL, LBL, SSCL, and WSTC	2250
e. Management and cost/schedule estimates	ANL, FNAL, and WSTC	200
	Scintillator/tile subtotal	*4400*

*Foreign budget not included.

Table 9 (continued)
FY1992 calorimetry budget (continued)

Calorimeter design task	Institution	Requested (K$)
2. Forward calorimeter		
The division among institutions will occur in November after review of ongoing efforts.		400
	TOTAL	*4800*

*Foreign budget not included.

Table 10
Calorimetry R&D milestones

Milestones and Goals	Date
1. Central calorimetry	
Decide on iron or lead absorber	11/91
Design report complete	4/92
Begin prototype materials procurement for barrel wedge	6/92
2. Forward calorimeter	
Select options for Technical Proposal	2/92
3. Shower maximum	
Baseline design finalized	11/91
Technical proposal for shower maximum detector complete	4/92
Selection of transducer for shower maximum detector	9/92
Begin preproduction prototype	10/92

8. Muon system

8.1. Introduction

The principal measurement of the muon momentum for the central ± 1.5 units of pseudorapidity is made by the inner tracker. The outer muon system makes the principal momentum measurement for $1.5 < |\eta| < 2.5$ and transverse momenta above 100 GeV/c. It also improves the momentum measurement in the central region for very high transverse momentum muons, typically, those with transverse momenta > 300 GeV/c.

There are five principal functions which the muon system must provide:

1. A Level 1 trigger,
2. Contributions to the Level 2 and Level 3 triggers,
3. The identification of muons,
4. The improvement of muon momentum resolution at high transverse momenta, and the primary measurement of muon momentum in the forward direction, and
5. Capability of operation at luminosities above the design level, where the inner tracker may not be fully functional.

The key elements of the muon detection system, shown in Fig. 2, are the large iron toroidal magnets which surround the calorimeter. In the central and intermediate regions, they provide a kick which allows a simple Level 1 trigger and a redundant momentum measurement, necessary to separate muons from particles which punch through the absorbers. In the forward direction, they provide the principal momentum measurement as well as the trigger for high p_t tracks. The Level 1 trigger uses the toroidal bend, and requires measurements of the polar angle. The Level 2 trigger attains higher resolution by using a match between a track in the central tracker and a stiff track in the outer muon system; thus it requires measurements in the azimuthal direction.

The Level 1 trigger uses scintillation counters and those chambers located beyond the toroids. The scintillation counters define the crossing time of the trigger and provide a coarse transverse momentum cut. The transverse momentum definition is refined by chambers which are built with projective wires. The time difference between signals arriving at the projective wires is inversely proportional to the transverse momentum, allowing a simple trigger. In the forward direction Čerenkov counters, which are insensitive to neutrons, are used to improve the trigger.

The design specified in the Letter of Intent (LoI) had two layers of scintillation counters everywhere, 28 layers of wire chambers in the central and intermediate regions, and 26 layers of wire chambers in the forward regions. The resolution per superlayer in both θ and ϕ is specified to be 250 μm in the central and intermediate regions and 100 μm (θ only) in the forward regions. All of these requirements are being reviewed. Our preliminary conclusion has been to reduce the number of chamber layers to 18 in the central region.

Currently, prototypes of four chamber designs are being constructed in the United States and Japan. During the last quarter of 1991, tests of the prototypes will be performed and a decision will be made on the final chamber design in February 1992. Other research and development goals for FY1992 include prototyping and testing of scintillation and Čerenkov counters, the design and construction of a supermodule support test structure, the design, prototyping, and testing of alignment systems, and the design of production assembly lines.

Milestones for the muon systems are given in Table 11, and the FY1992 budget request is in Table 12.

8.2. Chamber program

Development of the muon chamber design is the major focus of activity. The goal of this activity is to provide a robust and cost effective tracking system which matches the physics goals of the SDC detector. In order to evaluate the performance and cost tradeoffs, large prototypes of several candidate designs are presently under construction.

Although many drift module construction techniques have been considered, four primary candidate designs have emerged. Each design arranges the drift cells in projective geometry for simple triggering, arranges ionization drift directions perpendicular to the muon tracks at all locations to avoid systematic position measurement errors, and provides a uniform scheme for measurements of polar angle and azimuth with "stereo" measurements connecting the two coordinates. In the US, a design based on simple aluminum drift tubes with nearly cylindrical drift fields is under development at Wisconsin and Maryland, a similar design using true cylindrical tubes is

being studied at Washington and the SSCL, while a design based on an orientable drift cell with internal field shaping electrodes is being developed by Harvard, Brandeis, and Tufts. The Japanese members of the collaboration are focusing on an oriented jet cell. The possible advantages and disadvantages of each will be discussed in turn.

8.2.1. Drift tube

The drift tube design for the barrel and intermediate chambers is based on an extruded doublet of octagonal 75 mm diameter tubes. This tube design is shown in Fig. 5. The basic module consists of a stack of four layers of half cell-staggered cells with small gaps between tubes within a layer arranged such that corresponding wires in alternate layers project to the beamline. The essentially cylindrically-symmetric drift field within these tubes has several advantages. In the first place, the response of the tube is independent of the incident angle of the track, and secondly, the cell is electro-mechanically stable. Because the grounded tube is far from the wire, the tube is rather insensitive to the location of the cell wall relative to the wire. It follows that long tubes can be constructed with wire locations fixed only by endplates. The gravitational deflection for standard wire is about 1.5 mm at 9 m length and may be calculated and corrected for. Novel low-mass wires are under study at Washington and Osaka that may render this correction unnecessary. Barrel tube lengths of up to 9.5 are possible in 75 mm tubes without wire supports. Supermodules of area 8 m × 9 m containing wire planes in several orientations are being engineered by PSL and FNAL, along with their support structures. The octagonal tubes stack compactly and may be bonded together to form a self-supporting unit. The supermodules may be supported only at the ends where they ride on rails.

The tube diameter is limited to about 75 mm by the requirement that the drift velocity be saturated throughout the cell and by the amount of space available to accommodate the desired number of layers in the inner barrel module. Another limitation of this design is multihit capability—a track going through the center of the tube generates ion clusters that drift in over approximately 1 μs, potentially obscuring another track within the same cell.

In the forward region, 40 mm wide square tubes in an eight-cell extrusion are proposed. These tubes are arranged like chords of circles in pie-shaped planes on a bicycle wheel support structure. The

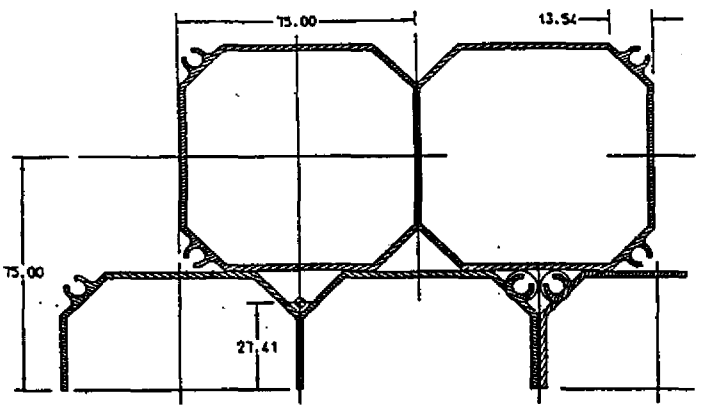

FIG. 5. Extruded aluminum octagonal cell doublets. Dimensions are in mm.

wire planes overlap along the octant boundaries and small-angle stereo is used for azimuth measurement. Engineering of this design is being done at Maryland. Studies of short tubes are proceeding at Maryland and Wisconsin.

An order has been placed for extrusions to construct a 32 cell, 9.5 m long prototype of the barrel chamber at Wisconsin. The construction will provide some experience with assembly techniques and parts including endplugs and fittings, endplates, and adhesives.

8.2.2. Oriented cell

The oriented tube design is based on a two-piece oval extrusion containing two electrode-strip field-shaping inserts which generate a uniform drift field along the major axis of the cell over a gas thickness of approximately 2 cm. This tube design is shown in Fig. 6. Each cell is oriented so that muons enter the cell approximately normal to the drift direction in order to avoid systematic effects associated with large-angle incidence. As in the octagonal tube design, drift cells are staggered and projective. In this case electrostatic instability limits the length of unsupported wire to about 3 m. The tubes are therefore supported and oriented by a set of "wine racks." A simple machining operation on the tube at the location of the wine rack intermediate supports allows the precise implantation of a wire support.

In this scheme, the locations of all wine racks must be precisely known. The tubes and racks themselves are not self supporting. An external box support and internal alignment structure is being designed by Draper Lab based on a network

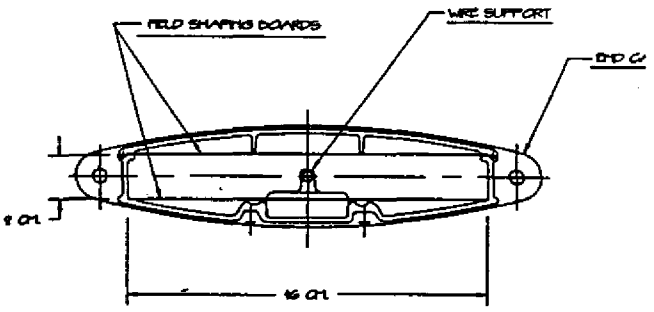

FIG. 6. Detail of the oriented drift tube design.

of LED/lens/photodiode optical alignment systems. Supermodules of about 8 m × 9 m are envisioned.

The oriented cell has the potential advantage of good two-track resolution. While nominally it has the same drift length as the octagonal tube, it is also possible to extend the drift length beyond 4 cm to reduce the channel count. However, more space is required to fit a given number of layers. This problem is under study.

An order has been placed for extrusions to build a 9 m prototype of 4 cm drift cells at Harvard to gain experience with parts and assembly. Cosmic rays will be observed in this chamber in late 1991 to study the chamber performance.

8.2.3. Jet cell

A separated-cell geometry is being pursued at KEK. The chamber is based on a jet cell of three sense wires with 1 cm spacing interleaved with four potential wires and terminated with two guard wires at the ends of the row. This cell design is shown in Fig. 7 and the chamber configuration in Fig. 8. Planar cathodes placed approximately parallel to the wire plane provide a uniform drift field without introduction of additional field-shaping electrodes. A superlayer is composed of two layers of the jet cells, one layer being staggered by a half-cell with respect to the other, providing redundancy for the Level 1 trigger.

A novel feature of this chamber is that the cells are arranged to project to the beamline by tilting the configuration of the wires and cathode walls. Advantages of this design include a possible low-mass structure and good multitrack resolution which gives a superior pattern recognition capability for muons accompanied by electromagnetic shower fragments. The maximum drift length can be extended beyond

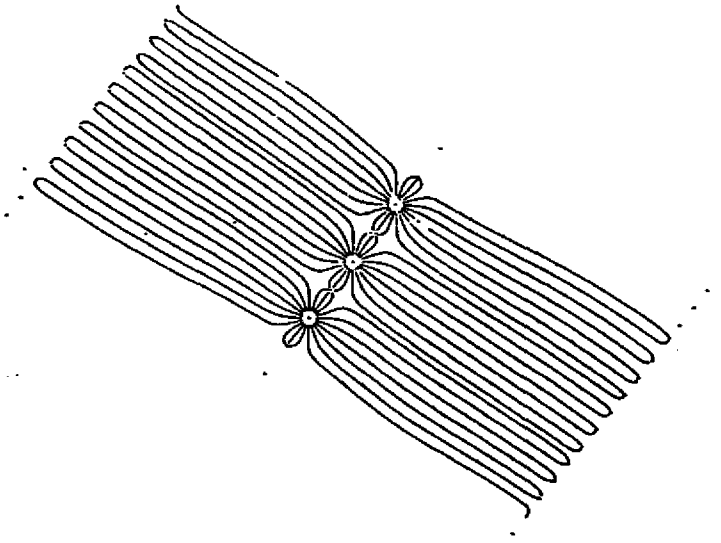

FIG. 7. Field map for the proposed 3-sense-wire jet cell.

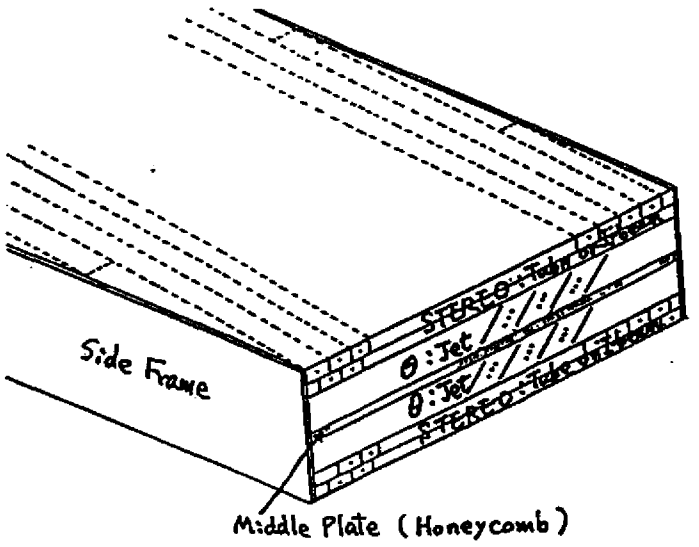

FIG. 8. Chamber layout for a jet cell superlayer. The diagonal wire planes separating the cells are at the guard-wire potential.

4 cm to reduce the channel count. The use of a fast gas based on a Ar/CF_4 mixture will be investigated, which allows an extension of the cell size without introducing a longer drift time.

A possible difficulty with this design is the large size of the chamber. The mechanical feasibility is a key R&D issue. Development of a full-scale prototype chamber, supermodule layout, support scheme, and alignment system is proceeding at KEK, with support from several Japanese institutions. Basic studies on jet cell chamber performance using small test chambers are also proceeding at KEK.

8.2.4. Chamber development in FY1991

A major activity continuing into FY1992 is the development of the four designs described above, including in each case construction of a full length prototype, engineering of the support structure, and development of a cost estimate. An alternate scheme combining resistive plastic tubes with integral co-extruded electrodes is being investigated by the Minnesota group and a light-weight support system designed specifically for plastic drift tubes is being investigated by the Rochester group. Studies of the mechanical properties of wire and the drift and gain properties of various gas mixtures are proceeding at Washington. Development of flat resistive plastic electrodes for field shaping for possible application to the oriented cell is underway at Rochester.

A choice among these designs based on relative cost, performance, and risk will be made by the end of January 1992. It is anticipated that the design of choice will be sufficiently well-developed that a credible, detailed proposal may be formulated rapidly.

8.2.5. Chamber development plans for FY1992

In FY1992, the activities of the muon group will be focused on making prototypes of the production versions of the chamber systems. It is anticipated that the present institutions and possibly others will participate in chamber production. We expect to be setting up chamber production facilities at the SSCL.

For tube-based designs, the production model is quite flexible. Single tubes may be constructed and tested at several locations. The tubes may be assembled into larger transportable chamber modules of about $2 \times 9 \times 1$ m^3 for shipment to a supermodule assembly facility. Alternatively, individual tubes may be shipped to a larger central assembly area. The staging of the production and the impact on the mechanical support structure of these alternatives will be better understood when the present prototypes are complete. However, development of a outer supertower in 1992 (see Section 8.6) is required to explore the production model and to test the supermodule support scheme. We propose constructing the outer supertower at SSCL to begin the development of a technical support base at the SSCL. The outer supertower response to cosmic rays will be studied and experience gained with the gas, electronics, trigger, and alignment systems.

Completion of chamber development engineering must be accomplished in 1992. In particular, a complete set of drawings of the many chambers must be generated, integrated with the design of the other detector components. To this end, we request support for CAD systems and engineering. Development of the tooling for the various parts will proceed, potentially including endplates, feedthroughs, gas fittings, field shaping elements, wire and wire connections, wire tension measurement, and cabling.

8.3. Trigger counters

The SDC muon trigger is based on a combination of signals from two layers of scintillation counters and from several drift chamber layers. In the forward direction, where rates and noise levels may be high, a set of Čerenkov counters is implemented to strengthen the trigger capability. The muon chamber system is the slowest SDC detector component, with maximum drift times that may be as high as 1 μs. It is therefore essential to add a set of fast counters to the muon system that can correlate a muon track with a particular proton bunch crossing. Mismeasurement by one bunch crossing period introduces a drift chamber measurement error of about 0.8 mm, which may be difficult to identify from drift-time measurements alone. Moreover, it is crucial to be able to make an unambiguous event assignment to the muon information.

The SDC muon system therefore contains two layers of scintillators segmented into a geometry which allows a precise time measurement and the imposition of a fixed p_t threshold of about 10 GeV/c (50% point). A projective drift chamber geometry is then used to impose a variable p_t threshold of up to about 50 GeV/c in the Level 1 trigger.

The main goal of the scintillator R&D is to find a configuration which meets performance criteria at minimum cost. The performance criteria are:

1. Efficiency > 99%
2. Ability to resolve correct bunch crossing
3. Long term stability

To minimize cost, we intend to give priority to a two-layer design in which each counter is read out through a single phototube. The barrel requires a total of about 6000 counters assuming four ϕ segments per octant and a width (20–60 cm) corresponding to a p_t threshold of 10 GeV/c. The total number of counters for the two forward regions is about 2800.

We began a small R&D program in 1991 with the following goals:

1. Evaluation of scintillators produced by Bicron, Kuraray, NE, and Polycast. The scintillators are up to 3.0 m long, vary in thickness from 0.6–2.0 cm, and are 15–60 cm wide.
2. Evaluation of four different schemes for light collection, including the use of single-piece and multi-piece twisted plexiglass light guides, wave-shifting fibers embedded in the scintillator, and ribbons of thin fibers glued to the scintillator edges.

This R&D program requires a cosmic-ray telescope setup which is beginning to produce results. Our highest-priority goal is to see if wavelength-shifting fibers can produce a good minimum ionizing signal (> 10 photoelectrons).

For 1992 we propose to continue this research and expand it to include a detailed evaluation of phototubes, trigger characteristics, power and electronic requirements, and system engineering issues.

The Čerenkov counter development planned includes test-beam measurements and analysis of the test-beam work, mirror and phototube studies, and studies of the overall mechanical structure.

The University of Michigan is working on muon scintillation counter R&D and the University of Colorado is working on the Čerenkov counter. Members of the collaboration in Japan will also contribute to the muon scintillation counter system. Physicists from Serpukhov are also contributing to the scintillation and the Čerenkov counters for the muon system.

8.4. Support and alignment system

An extensive effort is required to translate the evolving model of the SDC detector layout of the muon system into a viable mechanical model. We are developing definitions of system and chamber modularity, a design of rigid chamber supports, a design of the barrel trusses and drawers, and a design of the support rail system. We are also developing concepts for subassembly prealignment, handling fixtures, and in place chamber position monitoring systems.

Using these concepts, we are studying system assembly and installation problems and the associated requirements for the SDC detector hall. We are also studying the major detector access concept with the opening and disassembly of one detector end (forward muon system) and its associated engineering problems. We are also developing a design for the gas system. This is being integrated with the design for cable paths and electronics and power supply distribution.

We are pursuing the design of a prototype central toroid truss model for the support of aluminum extrusion type prototype chambers with perimeter bulkhead or box supports. This will include handling attachments, trunnions, rollers, rails, and supports. A design for a set of kinematic supports (x-y position adjustable) for one BW3 and one BW2 supermodule (see Fig. 2) will be completed. When the chamber prototype concepts firm up, we will fabricate the prototype truss.

The resolution and long-term stability of a variety of devices for monitoring the distance between chambers and the transverse chamber position will be studied. From this evaluation we shall define the prototype alignment monitoring system for tests at SSCL.

As part of the supertower prototype effort (see Section 8.6), we will make an optical survey of surfaces and reference points on the prototype BW3 and BW2 supermodules to develop and optimize both the alignment procedures and reference locations. Various support configurations will be evaluated.

In addition to the effort on the barrel towers, we will develop a barrel end truss design (intermediate region) and mountings for these trusses. We plan to develop the support structure design for the scintillator, electronics support, and access ways in the barrel system.

Finally, we will develop a model of the forward mechanical and alignment systems. This will be an integrated model including chambers, scintillation counters, Čerenkov counter, mechanical support structures, alignment and monitoring systems, and assembly scenarios. By the end of 1992 we plan to have a complete and viable model of the SDC muon system.

Up to this point the primary efforts for the support and alignment system have been developed by the FNAL group with assistance from the Wisconsin/PSL group. We expect that this effort will substantially increase with additional work from other SDC groups.

8.5. Magnet design

The muon toroid system consist of the barrel toroid, the forward toroids, coils for each of the toroids, and the support structure under the barrel. A conceptual design for the barrel toroid and the coils has been completed. The conceptual design of the support system is well underway and work has begun on the design of the forward toroids.

8.5.1. Barrel toroid

The barrel toroid is an octagonal cylinder of about 18,000 metric tons of steel. The dimensions of the barrel are shown in Figs. 2 and 3. Three concepts for the design of the barrel toroid have been examined. A thin-plate design was considered in which the toroid is assembled from approximately 1100 thin (6 inch) plates. These plates are stacked axially and friction-bolted together. In a second design (the large block design), the barrel is built from 88 large blocks (175 metric tons each). These blocks consist of axial laminates welded together to form one facet of an octagonal ring. They are lowered into the hall and joined together with toe bolts. In a third concept (the staggered tile design) the structure is built by interleaving four layers of large plates in such a fashion that consecutive layers eliminate any completely projective cracks. In this case the individual plates are laminated in a radial direction from the beam line.

These concepts were reviewed by a committee assembled by the SDC technical management and separately by a group from Martin Marietta Corp. The recommendations from both of those review panels were combined and the long/short bolted block concept was developed as the design for the muon barrel toroid. This concept appears to provide a high quality, cost effective design.

In the long/short block concept, the barrel is assembled from 224 blocks. The top, bottom, and vertical sides of the magnet are each made from 37 trapezoidal blocks. Each of these blocks weighs 82 metric tons. The 45° sides of the octagon are made from short double-width blocks weighing 85 metric tons each. Using thick short blocks keeps the piece count near the minimum allowed by the lifting capacity of the hall cranes. The blocks are held to each other with corner bolts and axial bolts. The large moments at the joints require high-strength bolts. The engineering problems associated with high-strength bolts in soft magnetic iron continue to be investigated. We now are ready to proceed from the conceptual design phase into preliminary detailed design.

Preliminary discussions have been held with our DUBNA collaborators to explore procurement of the iron for the toroids from the Soviet Union. Members of the SDC have made two trips to the Izhorsky Zavod ironworks to discuss production of the steel by that enterprise. Engineers from Izhora have also visited the SSCL. Samples of the A87 steel produced at Izhora have been tested and found to be satisfactory both mechanically and magnetically. Further magnetic field studies are needed to understand the effect of engineering tolerances on the uniformity of the magnetic field produced by our design.

8.5.2. Barrel magnet coils

The coils for the barrel toroid will drive the iron to an average magnetic induction of 1.8 tesla. There are two coils on each side of the octagon for a total of 16 coils. These coils will be assembled onto the barrel after the steel is complete. To do this, the coils are constructed as two half-coils that are joined mechanically at each end. This concept needs detailed engineering study including a test of the reliability of the coil joints. This work will be done at PSL.

8.5.3. Magnet support

The design of the support structure is being done at the SSCL with input from the architectural and engineering firm at the laboratory since the design is closely coupled to the stability of the hall floor.

8.5.4. Forward toroids

Currently we are studying both a round and octagonal version of the forward toroids to determine if there is an significant difference to the muon trigger. If, as expected, there is no physics justification for a choice between these two geometries we will perform a preliminary design of each geometry to determine if there is any significant cost or scheduling difference. Following this study we will proceed with formal design of the forward toroid system.

8.6. Supertower prototype

One supertower (chamber layers BW1, BW2 and BW3 as indicated in Fig. 2, plus the truss structure) represents approximately 2% of the full muon system. Because of the scale of the SDC muon system we feel that system verification is necessary. We propose step-by-step development of a full supertower continuing through 1993 to evaluate and verify the design of the SDC muon system.

8.6.1. Stage 1—Rail system to hold outer supertower

We will set up a rail system to hold the BW2 and BW3 supermodules in one of the buildings at the SSCL. This will be a prototype of the rail and truss systems that will be mounted on the outside of the muon toroid. Chambers in this system will only be mounted in a vertical stack.

The intention is to use this prototype of the chamber support structure to develop the systems listed below. Although there will be some overlap in tasks, the list is given in the approximate order in which the work will be done. It is expected that the rail system will be designed, built, and ready to receive chambers by midway through FY1992

Mechanical setup

1. Test the truss/rail concept for loading chambers.
2. Develop the necessary laboratory expertise and infrastructure to receive, test, install, and verify chambers or chamber parts at the SSCL.
3. Develop the necessary tooling and fixtures to receive, test, install, and verify chambers or chamber parts at the SSCL.
4. Establish electronics packaging and cabling to evaluate space availability, access, assembly labor, and timelines for installation.
5. Develop operational experience with the SDC muon system to better understand the facilities needed and cost and schedule for its installation and operation.

Alignment test

1. Test concepts for the alignment of chambers. Measurements from embedded electro-optical systems and proximity sensors can be compared with external measurements to determine if they meet performance specifications.
2. Test system for mechanical stability. Behavior while loading and unloading the system and after movement will gauge the mechanical robustness of the design.
3. Thermally cycle the system to test behavior under thermal load. Chambers will be equipped with thermal sensors and are supported on kinematic mounts. A model will be developed of the behavior of the system under thermal stress such as the heating from the magnet coils or changes in hall temperature. Thermal loads can be applied to the system with heating coils or room heaters, and the validity of the model can be measured.
4. Test mechanical behavior under different conditions. Variations in the support structure and loading can be made and behavior of the system under a variety of conditions will be made.

Operational test

1. Chambers and trigger scintillator will be instrumented, made operational, and tested with cosmic rays.
2. Measurements will be made and used to evaluate chamber performance including resolution, electronics strategies, and operating range. Long-term operational effects such as gas leakage, material degradation, and humidity effects will be evaluated.
3. Data acquisition techniques and programs will be developed.
4. Timing and performance of the trigger system will be evaluated.

8.6.2. Stage 2—Full 3-layer supertower test bed

We propose building a test bed to hold one supertower. The structure will be sufficiently rigid to allow verification of the alignment system and to establish that chambers can achieve their specified resolution goals.

After construction of the test bed, the procedures and tests described in Stage I (Parts A, B, and C) will be repeated on the test bed with BW1 included in the test. In particular, we will extend the alignment system to include a chamber on either side of the toroid and verify the alignment and mechanical behavior with external instruments.

This entire procedure will be repeated with chambers mounted in all the spatial orientations possible on the actual detector. This may be done either by

having a system that can rotate to a new orientation or by dismantling and rebuilding the system, or perhaps by having different setups for the different orientations. It is also possible that we will need a different setup to study the installation of chambers under the magnet (octant five).

It is our intention to design this test bed during FY1992, then build it in time for it to receive chambers during FY1993. It is anticipated that before going into full scale chamber production we should be able to demonstrate a proof-of-principle that the chamber design, support system, and alignment system can fulfill the necessary objectives and achieve the physics goals of the SDC.

8.7. Test-beam program

Because of the delay in the FNAL running schedule, the two test beam efforts we describe below will continue into FY1992. At this time we require two test beams. One is a high-energy muon beam with the capability of tracking identified and momentum tagged muons after they pass through various types of absorber. The other is a high-energy (several hundred GeV) hadron beam with tagged particle identification and momentum measurement, for the purpose of measuring low-energy (about 1 MeV) neutrons emerging from different absorbers. Both of these beams are now set up in areas occupied by our collaboration.

8.7.1. Measurements of low-energy debris accompanying high energy muons

During this past year we have constructed and installed at FNAL multi-sampling drift chambers in order to study the electrons and positrons which accompany the muon exiting an absorber. We are performing simulations of these low-energy electromagnetic processes to compare with the test-beam results. This test-beam facility will also be useful for testing prototype drift cells provided by the members of the SDC. The muon test-beam experiment (T816) will run at the convenience of E665 at intervals during an approximate five month period. During this period we need to maintain the test-beam apparatus and collect data. We will construct test stands in order to be able to mount the various prototype cells. Supplies for the test-beam effort include expendables such as gas, computer tapes and paper, cables, connectors, gas hose, and flow meters will be required.

8.7.2. Measurements of low-energy neutrons from hadronic interactions in muon shielding

Measurements of the flux and energy spectrum of neutrons after a given number of absorption lengths are important in design considerations for Level 1 and Level 2 muon triggers at the SSC. In the high interaction rate environment of the SSC, a neutron sea will exist giving rise to a large number of accidental hits in the muon detectors especially in the more forward regions. Systematic data on the flux and energy spectrum of neutrons arising from hadronic showers will serve as a benchmark to test hadronic shower Monte Carlo programs. The test-beam effort (T821) will investigate possible problems associated with MeV neutrons escaping absorbers. Using two different types of neutron detectors we will measure the flux and energy spectrum of low-energy neutrons produced in hadronic showers. These measurements will be made as a function of the incident beam energy, material and depth of the absorber, and location with respect to the hadronic shower axis. We will tune our liquid scintillator and Bonner sphere detectors by running parasitically while the D0 collaboration calibrates their calorimeter. We are tentatively approved for one week of dedicated beam time to make these measurements.

Table 11
Muon system milestones

Milestones and Goals	Date
Complete Fermilab test beam runs	12/91
Complete long barrel chamber prototypes	1/92
Choose barrel chamber technology	2/92
Begin preliminary design of barrel toroid and support structure	2/92
Complete technical proposal	4/92
Complete barrel chamber conceptual design	6/92
Complete prototype supertower design	7/92
Complete barrel and intermediate tower design	9/92
Start supertower construction	9/92
Complete forward wedge prototype	10/92

Table 12
FY1992 muon system budget

Muon system design task	Institution	Requested (K$)
1. Iron toroids and detector support structure	PSL, SSCL, USSR*, and industry	1000
2. Muon chamber prototypes and design	Brandeis U., Draper Lab, Harvard U., KEK,* U. Maryland, PSL, SSCL, and U. Washington	1575
3. Scintillation and Čerenkov counter design	U. Colorado, KEK,* U. Michigan, and USSR*	125
4. Supermodule prototype	Draper Lab, Martin Marietta, and SSCL	600
5. Management and cost/schedule estimates	Martin Marietta and SSCL	200
	Total	*3500*

*Foreign budget not included.

9. Electronics system

9.1. R&D Plan for front-end electronics

We outline in this section the R&D plan for the front-end electronics for all detector systems except silicon tracking. The plans for the trigger and data acquisition (DAQ) systems are summarized below. The boundary between the front-end electronics and the trigger or data acquisition system is somewhat fuzzy. However, in general the transition between front end electronics and DAQ is at a standard DAQ interface card which is present in each front-end crate. The front-end electronics includes the generation of the primitive signals for the trigger but not the processing of those signals into a trigger.

SDC currently has a large and well-coordinated R&D program on electronics underway. During FY1991 there were approximately 20 FTE's of engineering in the United States focussing on the front-end electronics with about another twelve FTE's working in Britain, France, Italy, Japan, and other countries. Milestones for planned R&D for front end

electronics are given in Table 13. The scope of all the work is referred to here, but detailed budgets are presented only for the work in the United States (Table 15). Designs are quite far advanced for the wire chamber (straw tubes and muon detectors), silicon strip, silicon pixel, scintillating fiber, calorimeter, and shower max readout systems. Work is also ramping up on the readout of gas microstrip detectors.

9.1.1. Wire chambers (straw tubes and muon chambers)

The readout system for wire chambers will consist of a bipolar integrated circuit including preamplifier, shaping amplifier, and discriminator and a CMOS chip which performs time measurement and some fraction of the control logic. Versions of the bipolar chip have been fabricated in both the US and Japan. Work to date has focussed on meeting the speed, noise, and power specifications for the straw tubes, which are in all cases more stringent than those required for the muon chamber readout. The prototype IC's tested to date include the preamplifier and shaping amplifier. They meet almost exactly the design specifications with a peaking time of 5 ns, return to baseline of less than 15 ns, and the expected noise performance. An 8 channel chip including preamplifier, shaper, tail cancellation, and discriminator has been submitted for fabrication.

Two time measurement systems have been under development. One of these, the Time Memory Cell (TMC), is purely digital and is being developed in Japan. A version has been produced which yields four channels per chip with 1 μs Level 1 storage buffer, or 1 channel per chip of 4 μs Level 1 pipeline. The time resolution is 0.5 ns and has been verified in actual tests with straws as well as in bench tests. The chip satisfies all the performance requirements for time measurement, but the Level 1 storage time needs to be increased to 4 μsec; it is believed that this can be done in a relatively straightforward manner, though it does entail a relayout of the chip. It has also been determined from radiation tests that the present TMC is probably not sufficiently radiation hard. Alternatives to harden the chip are slight modicications in the NTT process or fabrication in a Fujitsu process which is known to be good to one Mrad for SRAMs. Level two storage and readout logic should be straightforward, but need to be incorporated. That will require additional chips and area. At present, the TMC chip is the primary choice of the SDC for the time measurement.

A second time measurement system under development in the United States utilizes a time-to-voltage converter with an analog memory unit for Level 1 and Level 2 storage; most control logic for interface with the trigger system and data acquisition system would be included on the same IC. The time measurement and analog memory has been fabricated and tested and yields a time resolution of < 0.5 ns. This approach would allow at least four channels per chip with pipeline storage times up to 3–4 μs. A full version of the chip including the Level 2 storage is being implemented. Tests of the radiation hardness of CMOS processes indicate that this system should work to at least several Mrads, which is considerably beyond the requirement. Work on the time-to-voltage converter will not be supported during FY92 by SDC funds due to the funding constraints; the work will continue at a reduced pace supported by other funds.

The R&D on these systems in FY1992 will concentrate on the full system development which is critical to demonstrating proof-of-principle at the system level. This includes refined, multi-channel versions of the bipolar and CMOS chips mounted on ceramic or PC substrates at the full density of the final system. Particular emphasis will be placed on verifying that the crosstalk from the digital electronics to the preamplifiers or to the straw detectors is sufficiently small. Cabling, HV distribution, LV distribution, and crates for interface to the data acquisition system will be understood in sufficient detail to allow an accurate cost estimate and to keep the overall project on schedule. Some detailed engineering on these systems that would better be done in FY1992 will be deferred until FY1993 due to lack of funds.

9.1.2. Calorimeter electronics

Two systems of electronics for the calorimetry, one utilizing switched capacitor analog memory units (SCA) for Level 1 and 2 storage, and the other a fully digital system, are currently being pursued. The first is being developed at LBL and includes preamplifier, fast shaping amplifier, switched capacitor storage (currently 256 storage locations which corresponds to 4 μs), 12 bit Wilkinson-type A/D, and control logic for interfacing to the trigger and DAQ system. Two gain scales and SCA's would be used for each channel thus providing two overlapping 12 bit scales to obtain the required dynamic range. With this system analog summers would be used to

provide fast trigger signals for a trigger system located at the surface. The granularity of the trigger system would be 4000–8000 signals rather than the full 40000 readout channels of the calorimeter.

In the fully digital system being developed at Fermilab, a fast bipolar, gated integrator chip would be used together with commercial 8 bit A/D's operating at 60 MHz to provide a digital word with a dynamic range of 18 bits and an accuracy of 8 bits. All forty thousand channels would be digitized in this way at the crossing frequency and digital sums, compares, *etc.* would be utilized to provide the trigger. In this way the readout system and trigger system use the same digital information.

These two systems will be pursued in parallel until early 1992. Detailed technical reviews were held in September 1991 and another review will be carried out in January–February 1992. The analog readout system may yield sufficient dynamic range at lower cost and follows the approach of placing most of the trigger electronics at the surface where it is accessible. The digital approach offers the potential advantage of a single digitization for both readout and trigger which removes any need to separately calibrate the readout and trigger paths; it may also provide larger dynamic range. According to the current trigger baseline design, the Level 1 trigger will be on the surface, independently of which readout system is chosen. Each system must demonstrate technical feasibility and provide high reliability. For whichever system is selected, the primary goals for FY1992 will be to fabricate a complete prototype system capable of reading out several hundred channels of electronics. Sufficient engineering will be done on cables, crates, power supplies, and interconnects to the trigger and data acquisition systems to allow an accurate cost estimate and to keep the overall production on schedule.

9.1.3. Scintillating fiber tracker readout

The present design for the scintillating fiber readout assumes that, for each bunch crossing, it is determined whether each fiber has a hit or not. Patterns of which fibers are hit are used to find track segments which are then linked into tracks within the Level 1 trigger time. The proposed system integrates rather closely the readout and the tracking trigger. Those portions which are most closely related to readout are budgeted in this section while those which are directly related to the trigger are budgeted in that section. It should be noted that the cost of the preamplifier/shaper/discriminator is included under the scintillating fiber detector system cost. The VLPC and preamplifier/shaper/discriminator package are under study by Rockwell Corporation and Fermilab. The primary tasks during 1992 are to complete the conceptual design and provide a mockup of the crate and interconnects. Work will continue on a full prototype version of the system which finds track segments and links them into tracks.

9.1.4. Shower maximum detector readout

Work is reasonably advanced on the readout electronics for shower maximum detectors. The key features of this system are the measurement of charge with limited dynamic range (approx 9 bits) for 40–80K channels. The occupancy in each channel should be quite low. Much of the design is being done at Saclay, but it is currently thought that either the LBL readout scheme for calorimetry, and perhaps the FADC approach, can be utilized.

9.2. Data acquisition (DAQ) system

9.2.1. Current status of DAQ activities

A modest program of R&D on DAQ issues has been in place for the last year. The major focus of this effort has been the development of simulation models for various parts of the DAQ system. Substantial progress has been made in learning to use commercial simulation tools, developing simulation models, and using the simulations to study DAQ behavior. Simulations are being used to study the front-end readout, front-end/DAQ interface, trigger/DAQ interface and gating logic, Level 2 trigger readout, data collection network, switch event builder, dual-port memory event builder, and the behavior of the complete DAQ system. These simulation efforts are now in full swing and are generating a variety of results on DAQ parameters such as throughput, deadtime, and buffering requirements. These simulations are also playing an important role in demonstrating proof of principle for DAQ components and the architecture as a whole and developing a better understanding of the DAQ behavior without extensive hardware prototyping.

There has also been support for studies of switching networks for event building and high speed fiber optic data transmission links. These efforts have

Table 13
Front-end electronics R&D milestones

Milestones and Goals	Date
1. Wire chambers (straw tubes and equivalent for muons)	
Readout of 64 channel modules; amplifier/shaper/discriminator and Level 1 storage	7/92
Readout of 150 channel modules with amplifier/shaper/discriminator, time measurement, Level 1 and Level 2 storage	9/92
Readout of 150 channel modules with ASD/Level 1/Level 2 and prototype data collection chip	12/92
2. Calorimeter electronics	
Initial tests of switched capacitor chip including on chip A/D	1/92
16 channel prototype of digital FLASH ADC: prototype of charge pump base	11/91
Complete testing of switched capacitor chip including on chip A/D	4/92
Testing of complete calorimeter readout based on switch capacitor array	6/92
Second version of gated integrator ASIC for fully digital readout; investigation of on chip FADC	5/92
Prototype ASIC for digital storage and gain control including RAM lookup, Level 1/Level 2 storage, Readout FIFO	8/92
3. Shower maximum position detector	
Design prototype analog storage and readout chip	10/92
Test readout chip	1/92
Begin design of full scale prototypes	6/92
Results of readout chip tests	8/92

resulted in working prototypes of fiber optic links and a demonstration DAQ system utilizing a switch event builder.

A good start has been made on a baseline design schedule and cost estimates for the DAQ system. This work has been coordinated by Fermilab. Initial contacts have been made with potential industrial partners (in particular with IBM and AT&T) that could lead to collaborative R&D or engineering projects. Significant DAQ work is underway at KEK, Rutherford Laboratory, and Saclay on topics such as data collection chips, data transmission, event builders, and processor farms.

9.2.2. Overview of DAQ R&D and engineering plan

FY1992 spending for DAQ R&D and engineering is focused on critical path items that are needed to meet the schedule for providing DAQ to the SDC detector. An item may be on the critical path for the following reasons:

1. It provides proof of principle that the DAQ system or an element of the DAQ system will work.
2. The item has a long leadtime.
3. The item is needed on a short time scale for use by other subsystems.
4. The item has high technical and/or cost risk.
5. The item is needed as part of preparation of the Technical Proposal.
6. R&D is needed in order to make technology choices.

Engineering support is needed in FY1992 to prepare the Technical Proposal and to provide cost and schedule information for the SDC DAQ systems.

The schedule for providing the DAQ system is as follows:

1. 1/92 first draft of DAQ section of the Technical Proposal completed (including schedules for construction and cost estimates)
2. 4/92 Final DAQ section of the Technical Proposal

3. 6/93 Portable DAQ available for electronic and detector systems tests
4. 1/94 Test beam DAQ system available
5. 1/97 Begin commissioning of full SDC DAQ
6. 1/99 Completion of SDC DAQ

This schedule determines when technology choices and designs for DAQ components must be completed. Certain key components of the DAQ have a long leadtime, affect the design of other components of the DAQ and electronics systems, and are on the critical path. These include the part of the DAQ that collects data from the front-end electronics and the control and monitoring systems. Work on these critical path components needs to proceed on the following schedule:

1. 6/93 Initial design of key DAQ components completed. Note that this requires technology choices for these key components to be made by the end of FY1992, and thus engineering and R&D will be required in FY1992 to allow these technology choices to be made in an informed manner.
2. 6/94 Complete prototype testing of key DAQ components
3. 6/95 Final design of key DAQ components completed

Most of the R&D tasks specified below are for such critical path items.

Technologies for DAQ components that are not on the critical path (Level 3 processors, event builder subsystem, *etc.*) do not need to be selected early. Later decisions will allow the use of lower cost and higher performance technologies. For these DAQ components the specific detailed technology choices can be deferred until FY1995 or even later, and we do not require R&D funds at the present time.

Milestones for the FY1992 DAQ R&D and engineering are given in Table 14 and the budget request is included in Table 15.

9.2.3. Areas of DAQ R&D needed in FY1992

Architectural modelling

It is important to do sophisticated modelling and simulation of data acquisition architectures before technology choices are made and final design of the DAQ system proceeds. These simulations lead to better understanding of data bandwidths, deadtimes, buffering requirements, and other DAQ parameters, as well as allowing us to evaluate different architectures in preparation for making technical choices. Work currently underway includes:

1. Data collection network and interface to event builder
2. Interface between front-end electronics and DAQ
3. Commercial networks for data transmission; commercial switches with input queuing networks
4. Front-end readout
5. DAQ/Trigger interface

These efforts must continue in FY1992.

Data transmission

A modest amount of R&D is required to understand the options for moving data off the detector. These studies have impacts on space and access requirements and on overall detector design which must allow room for cabling. Tasks underway include:

1. Data transmission options and cabling requirements
2. Reliability analysis of data transmission options

We are not requesting funds for development of data transmission hardware, but are assuming that industry will supply us with needed components. If the overall DAQ system design appears to require optical transmission media with characteristics (radiation hardness, low power, or high bandwidth) that are unlikely to be supplied by industry, we will require significant R&D funds for their development.

Redundancy/reliability studies

It is critical, in conjunction with the trigger and physics groups, to analyze in detail the reliability and redundancy requirements placed on the data acquisition system. We need to know how our physics is degraded by different types of failures or errors in the DAQ system so we can make design choices, and to understand what type of access to DAQ components at what frequency is necessary. This task will require both physics and detector simulations as well as models of failure modes of the DAQ system, and will involve interaction between physicists, engineers, and programmers.

9.2.4. Areas of DAQ engineering needed in FY1992

Lead systems engineer for coordination of front-end electronics, trigger, and DAQ design efforts

This requires support for a full-time engineer for travel for contacts with the electronics liaisons for the different subsystems. More importantly, this requires identifying the individual who will play this role. Funds are not requested here for this task, as this engineer will be supported out of project management funds. However, it should be reiterated that it is important for the overall DAQ efforts to identify this individual as soon as possible.

Preparation of cost, schedule, Technical Proposal, and other documents

The cost/schedule estimate is being coordinated by FNAL and will continue in FY1992.

Industrial collaboration in areas of large system design

Several of the SDC industrial partners have considerable experience with large system design, in particular in the areas of reliability and fault tolerance. It is likely that we can develop joint projects with one or more industrial partners to study:

1. Reliability analysis of DAQ as a system
2. Failure analysis of DAQ components and networks

Preliminary design of key DAQ components

As discussed above, certain critical path DAQ components need to be designed at an early stage since their design affects the design of other subsystems. In particular, early decisions on the designs of data collection interfaces and control and monitoring networks are required before final design of front-end electronics is possible. We are thus requesting funding for design and possible prototyping of:

1. Data collection interface with front-end electronics
2. Control and monitoring networks

Note that there are two different approaches to data collection: one involving a hierarchical network of data collection chips; and the other involving readout crates with processors in them that transmit the data to the event builder subsystem. Further investigation of each approach (possibly involving prototype development and evaluation of small-scale systems) is required to allow a choice between these approaches to be made. It may turn out that we will use both approaches for different subsystems.

Portable DAQ

It will be highly beneficial to supply a portable DAQ system that is easy to bring up and use in the various test bench and test beam activities over the next several years. The collaboration will save large amounts of manpower and money if each subsystem group does not have to develop their own mini-DAQ system for test purposes. This system will not be a prototype of the full DAQ system, since subsystem designers do not want to be testing out the DAQ system while trying to understand their subdetector. Rather, it will be a reliable small scale DAQ system with the same protocols as the real DAQ system, so that front-end prototype electronics can be tested. Work is required in FY1992 in the following areas:

1. Preparation of requirements and specifications for portable DAQ system
2. Design of portable DAQ
3. Development of prototype portable DAQ system
4. Development of prototype front-end interface
5. Development of trigger interface
6. Portable DAQ software development

Table 14
DAQ R&D milestones

Milestones and Goals	Date
DAQ R&D:	
1. Architectural modelling	
Simulation workshop	9/91
Detailed report on simulations	7/92
Technology choices of DAQ architecture based on simulations	10/ 92
2. Data transmission	
Report on data transmission options	7/92
3. Redundancy/reliability	
Model of DAQ system failure modes	1/92
Evaluation of physics impact of DAQ failures	7/92
DAQ engineering:	
1. Preparation of cost, schedule, technical proposal, and other documents	
Draft of DAQ section of technical proposal	1/92
Draft of cost/schedule for DAQ system	1/92
Final proposal/cost/schedule	4/92
2. Industrial collaboration on large system design	
Initial industrial contracts placed	12/91
Delivery of reports	9/92
3. Preliminary design of key DAQ components	
Data collection interface with front-end electronics	
Requirements and specifications	1/92
Preliminary design	7/92
Technology choices made	10/92
4. Portable DAQ	
Preparation of requirements and specifications for portable DAQ system	
Design of portable DAQ	4/92
Development of prototype portable DAQ system	10/92
Development of prototype front-end interface	10/92
Development of trigger interface	10/92
Portable DAQ software development	10/92

9.3. Trigger system

9.3.1. Trigger R&D status

A significant amount of work has taken place on triggering for our detector. The overall structure of the trigger system has been developed and there has been progress on simulation and conceptual design. Much of this work has occurred in the context of different front-end electronics options, necessitating alternative designs to address the different detector technologies.

The overall design of the straw tube tracking trigger has begun, and a chip that provides the p_t bits has been submitted for fabrication. A conceptual design exists for a Level 1 fiber tracker linker ASIC.

There have been a number of simulation efforts on calorimeter triggering and various triggering algorithms are under development and test. There are partially complete conceptual designs for isolated electron, jet and missing energy triggers. These are

being evaluated. Studies show that calorimeter data separated by only two crossings can be distinguished for triggering purposes. A conceptual design of trigger primitive generation is also partially complete. The appropriate tower size for summing is under study.

For muon triggers, we have completed the design of a fully digital synchronizer that encompasses programmable momentum selection and programmable total drift time. This unit is a prototype for precision timing tests. It has many test outputs for detailed evaluation.

A preliminary outline of the Global Level 1 Trigger system has been produced and is under discussion. Protocols for the interface between the Trigger and DAQ and between the Trigger and front-end electronics have been developed. Methods of error handling, rate control, and deadtime monitoring are being evaluated. The clock and control sections are under study. Simulation studies are being performed to determine the efficiency of correlation between subsystem trigger information. The overall role of the Level 1 and 2 trigger systems is being defined.

9.3.2. Calorimeter trigger development in FY1992

The overall goal is to develop a design for a first level calorimeter trigger for the SDC detector. This will include investigations into feasibility and costs of various technologies and system architectures.

A principal R&D issue concerns when to digitize. One possibility is to digitize all the calorimeter signals at the full crossing frequency. Alternatively, the analog information can be stored on switched capacitor arrays until most triggering decisions have been made. Only a subset of the full calorimeter information is necessary for triggering decisions. Decisions need to be made about when the information is digitized, both for data acquisition and for triggering.

An engineering design will be produced for calorimeter Level 1 Triggers. Prototype circuits will be constructed and tested. Particular attention will be paid to taking advantage of the scintillator speed. The trigger architecture will be developed to match the calorimeter characteristics. Studies of the specifications will be made, particularly for the LSI chips which might be designed specifically for the trigger. Specific triggers to be designed include isolated electron, missing energy, transverse energy, and jet or cluster detection and triggers based on towers over threshold. These triggers not only include use of calorimeter information, but involve combination with tracking, and shower maximum detectors, particularly in establishing isolated electron triggers. Specific issues to be investigated include segmentation (both transverse and longitudinal), amount and precision of information needed, resolution of trigger cuts, where to make the transition from analog to digital, and interaction with the global Level 1 trigger and DAQ systems. These studies will include Monte Carlo studies of the trigger rates. They will use time resolutions and bucket-to-bucket crosstalk measured in the test beam. Studies of the amount of trigger crate interconnects and engineering issues associated with trigger packaging will be pursued. Reliability studies will be done to determine the effects of dead PMT's, trigger channels, and interconnects, and to select the appropriate level of redundancy.

The specific elements for calorimeter triggering that are to be developed include: the fast summation and digitization of trigger tower energy sums; the comparison of these energy sums against thresholds; the fast summation of the digitized sums to form total energy sums in clusters of towers and over the entire calorimeter; the comparison of the energy in the hadronic and electromagnetic sections of the calorimeter trigger towers to determine whether there is a electromagnetic shower present; the examination of the energy in towers surrounding an electromagnetic shower to determine if the shower is isolated; and the matching of isolated electromagnetic showers with tracking, and shower maximum detectors. Each of these elements involves the design of ASIC or other custom circuits. In addition, these elements need to be packaged with a system of printed circuit boards, crates and cables.

The specific R&D tasks for calorimeter triggering are:

1. The interface to the front-end electronics.
2. Initial tower summing—longitudinal and transverse.
3. Local tests of tower electromagnetic and hadronic energy to identify electromagnetic showers.
4. Determining transverse isolation for electromagnetic showers.
5. Matching information with shower maximum detectors.
6. Summation networks.

7. Trigger primitive generation—making local trigger tests and sending these results to a central trigger network.
8. Tests on towers over threshold
9. The interface of the calorimeter trigger to the global Level 1 and Level 2 trigger systems

The costs and institutions involved for these tasks (and for those given in following sections) are summarized in Table 15. Milestones are given in Table 16.

9.3.3. Central tracker trigger development in FY1992

An efficient first level stiff track trigger from the central tracker is very desirable for efficient electron tagging within the rate limitations imposed by the speed possible for second level processing. Tests of tracker designs with triggering circuits will be essential to evaluate the accuracy and efficiency of possible stiff track finders. Optimization of trigger/detector connections and the construction of multilayer test fixtures will be necessary to verify the effectiveness of various designs. Integration of the central tracker trigger system with the global trigger and DAQ systems will be studied.

Straw tubes

The overall goal is to design a trigger with superlayers of straw tubes by making an ASIC to implement a stiff track sensor composed of several circuits designated "synchronizers" along with more conventional coincidence units. A complete design development, fabrication, testing, and simulation is contemplated. ASIC implementation of the circuit has shifted to a fully digital technique since this options does not require calibration and is less sensitive to electrical noise.

We have completed the design of a fully digital synchronizer that encompasses programmable momentum selection and programmable total drift time. This unit is a prototype for precision timing tests with many diagnostic outputs. The next chip will be a multi-circuit chip with a minimum of diagnostic outputs. Several circuits can be placed on a single chip. The full 21 tube pattern proposed for the superlayer trigger will likely fit on a single chip.

To assess the value of the proposed trigger a detailed GEANT simulation including the effects of loopers and minimum bias events has been developed with the inclusion of the proposed trigger. The program is being used and will continue to be used to evaluate the trigger design. A cosmic ray test stand is being assembled along with a section of a straw superlayer. With this setup the circuits will be tested on actual tubes.

For second level processing of stiff track information, neural networks offer promise for more elaborate evaluation of the hit patterns. Stiff track sensing can be investigated in conjunction with work on neural networks for pattern evaluation in calorimetry. A combined effort to look at detector specific stiff track finders with the more general purpose trainable neural network finders will make efficient use of prototype straw tube test fixtures.

Fiber tracker

The fiber tracking trigger R&D program will perform a detailed tracker simulation based on efficiency, time resolutions, and double-pulse resolutions measured in test beam. This will provide a realistic tracker simulation for estimating lepton and other trigger rates. The study will evaluate alternate hit-latching schemes to maximize efficiency and minimize bucket-to-bucket crosstalk caused by fake tracks in trigger. We will also fabricate and test a prototype Level 1 and Level 2 storage and segment-finder ASIC, as well as design the logic for and simulate a segment linker and track extrapolation ASIC. The engineering of the crate mechanics will be studied, including tests of crate-to-crate pipelined trigger interconnects, along with high-density cable selection. A logic design for pipelined intermediate track trigger similar to the barrel tracker will be determined. Finally, we will perform a reliability analysis of the fiber tracking trigger by studying the effect on trigger efficiency of dead wires, dead interconnects and dead logic channels and determine the appropriate level of redundancy in track trigger components.

The specific R&D tasks for track triggering are:

1. Straw tube synchronizer ASIC
2. Straw tube cosmic ray tests
3. Straw tube simulation
4. Fiber tracker segment finder ASIC
5. Fiber tracker segment linker ASIC
6. Fiber tracker p_t code and exchange

9.3.4. Muon trigger development in FY1992

A stand-alone first-level trigger must also be developed for the muon system and a second-level trigger that makes use of minimum ionizing information from the calorimeter and central tracking information from the inner tracker must also be developed. The quality of such a trigger and the ease of implementation depend strongly on the chamber design. Integration of the trigger design with the developing mechanical design is critical. Tradeoffs between granularity, momentum threshold, cost, cabling requirements, access, alignment, and calibration must be optimized for candidate designs. Integration of the muon trigger system with the global trigger and DAQ systems will be studied.

Trigger design

A quality muon tracking system for the SDC detector will require several groups of wire planes if muon measurements are to be precisely and reliably associated with the central tracking data. The short collision spacing of the SSC makes the use of drift tubes alone for triggering risky since the drift time interval for tubes is large. For this reason scintillators are proposed as the time-defining muon trigger. With scintillators, fast pulse timing can be used to determine the collision from which the signal originated. However, the cost of providing fine segmentation with scintillators is prohibitive. The coarse segmentation anticipated in the scintillator design does not provide a sharp momentum threshold. Wire chambers can provide this precise momentum selection if used in pairs. The combination of scintillators and wires assures excellent timing and momentum selection.

The trigger electronics must delay the scintillator coincidence a fixed time to allow for the maximum drift time of the wire chambers. If any of the aligned wire patterns associated with the scintillator signal yields a high momentum tag for the scintillator signal, the delayed scintillator signal would be passed to external circuitry. That circuitry assembles all such signals into a trigger decision. Multiple momentum thresholds will be used so that different momentum requirements can be imposed on single and multiple muon events.

For the muon trigger to be most effective it should process the raw muon data into muon signals (primitives) in η and ϕ intervals with each signal carrying its p_t designation. The current design relies on the projective wires to confirm the scintillator signals and to add 4 bits of p_t information.

R&D program

The R&D tasks will include the following areas:

1. Trigger crate location and modularity.
2. Information sequencing for primitives generation.
3. Buffer depths
4. Data format for primitives
5. Electronics implementation of the p_t binning and scintillator-wire correlation processing.

The 1992 R&D work is anticipated to produce:

1. A flow design of the full primitives generation.
2. Prototype ASIC's for wire and scintillator correlation.
3. Prototype circuit design for generation and multiplexing of the trigger primitives.

9.3.5. Silicon strips

The silicon strip tracker will be used in a stiff track trigger. For the first level trigger, simple gating logic has been devised which is able to find isolated stiff tracks. We are designing an ASIC which incorporates the first stage of this logic with the pipeline storage. At the second level, we currently envisage a two-pass logic, based on an initial search for interesting regions in (ϕ, η) followed by a more precise scan of those regions. We believe that a proof-of-principle design based on such logic can be built using currently available user-configurable logic devices. Our activities toward both trigger levels will be focussed on establishing the interfaces to the data acquisition for the silicon tracker, so that the hit strip information can be made available to the trigger processing, and on Monte Carlo evaluation of the algorithms to be implemented.

Trigger design

In order to provide a tracking trigger that is as independent of bias from the calorimetry as possible, the entire silicon tracker is read-out after every Level 1 trigger. The information is stored in external Level 2 buffers for eventual movement to the DAQ system. It is also used by the silicon Level 2 trigger in two passes. In the first pass strips are OR'ed in groups of 16, providing resolution of order $800/\sqrt{12}$ μm. The hit information is then histogrammed, either in ϕ–r bins (barrel) or ϕ–z bins

(forward regions). The histogram is scanned for regions which contain track candidates. An expansion pass follows, where regions with track candidates are examined with the full detector resolution. Such a system, with adequate speed, can be designed in conventional electronics.

The possibility of a Level 1 trigger will also be investigated in detail. The physical constraints on the system severely limit the information that can be made available at Level 1, but a system is under design that might allow the full resolution of the silicon to be used in the case of isolated leptons. Understanding the fallibility and utility of the scheme requires detailed Monte Carlo calculations, which will be performed. The front-end read-out chips need to be modified for such a scheme and the design of a full-custom chip to implement the data read-out is planned.

R&D program

The initial R&D program consists of producing a baseline design in conventional electronics and doing detailed Monte Carlo studies. The base-line design will be translated into custom chips in order to minimize the cost of the system.

9.3.6. Trigger systems engineering

A preliminary conceptual design of the Global Level 1 and Level 2 trigger systems will be produced. This includes distribution of clock and trigger signals as well as development of protocols for data transmission and techniques for correlation of information from different component trigger systems. Specifically, this activity intends to develop the timing sequences for components and global triggers; calculate realistic delays taking into account cable paths, processing time, synchronization, *etc.*; determine how to start, stop, pause, and resume a run; design a system for transmission and generation of Trigger Accepts; design a system for transmission and generation of the 16 ns clock; specify the amount of trigger data usable at various trigger levels; develop a protocol for test trigger generation for components as well as the downloading and dynamic propagation of test trigger events; and specify the interface to DAQ, component DAQ, and component trigger systems.

Many of the trigger design issues affect the design of other systems. In the EoI we listed the major issues, such as what systems supply information to the trigger, the degree of segmentation (both transverse and longitudinal), the precision necessary, and when one makes the transition from analog to digital, for example. The goal is to settle these issues in conjunction with the relevant subsystem groups.

As part of the design of the trigger we will investigate techniques to test the rapid rates of trigger data processing without colliding beams. Our design strategy will include several stages where artificial data can be injected, beginning with the initial digitization and continuing through the trigger pipeline to its output. We intend to place much emphasis on troubleshooting. It is also planned to provide hardware histogramming capability at the input and output to continuously monitor the trigger system. Input and output events that result in a first or second level trigger will be able to be retained and read out through the data acquisition system.

The specific R&D tasks for the Global Level 1 system are:

1. Interface to the subsystems
2. Clock and control (including Level 2)
3. Global trigger logic

The specific R&D tasks for the Global Level 2 system are:

1. Interface to subsystems
2. Global trigger logic

Table 15
FY1992 electronics system budget

Electronics FY1992 budget	Institution	Requested (K$)
1. Front-end electronics		
Wire chamber electronics	U. Colorado, Harvard U., KEK,* ORNL, and U. Penn	550
Calorimeter electronics	FNAL, LBL, and Saclay*	650
Scintillating fiber readout	FNAL	125
Management and cost/schedule estimates	FNAL, LBL, and industry	125
	Subtotal	*1450*
2. Data acquisition		
Architectural modeling	Brown U., FNAL, U. Illinois, SSCL, McGill U.*, and Toronto U.,*	75
Reliability analysis	FNAL, IBM, LBL, and SSCL	30
Data transmission studies	FNAL, KEK,* and LBL	50
Event builder, interface, and processor farm	FNAL and KEK*	
Preliminary design of key components (front-end interface and control/monitor interface)	Brown U., FNAL, KEK*, and LBL	50
Portable DAQ system	U. Michigan, Saclay,* and SSCL	95
Management and cost/schedule estimates	FNAL	50
	Subtotal	*350*
3. Trigger system		
Calorimeter	U. Chicago, FNAL, and U. Wisconsin	75
Outer tracker	FNAL, KEK,* and U. Michigan	119
Silicon tracker	Bristol U.,* Oxford U.,* and RAL*	
Muon system	KEK,* U. Michigan	46
Clocks/control	U.Wisconsin	20
System Engineering	U. Chicago, KEK,* Saclay,* and U. Wisconsin	200
Management and cost/schedule estimates	U. Wisconsin	20
	Subtotal	*500*
	Total	*2300*

*Foreign budget not included.

Table 16
Trigger R&D milestones

Milestones and Goals	Date
Establish trigger interface to the front-end electronics	1/92
Establish techniques for calorimeter tower summing and tests	1/92
Establish trigger interface to Global Level 1 and Level 2 systems	1/92
Straw tube synchronizer ASIC design	1/92
Fiber tracker segment finder ASIC design	1/92
Establish fiber tracker p_t code and exchange	1/92
Flow design of the muon trigger primitives generation	1/92
Conceptual design of Level 1 trigger interface to the subsystems	1/92
Conceptual design of Global Level 2 interface to subsystems	1/92
Conceptual design of calorimeter trigger front-end	9/92
Conceptual design for shower maximum trigger	9/92
Straw tube cosmic ray tests	9/92
Fiber tracker segment linker ASIC design	9/92
Prototype ASIC's for muon wire and scintillator correlation	9/92
Prototype circuit design generation of muon primitives	9/92
Conceptual design of trigger clock and control	9/92
Conceptual design of Global Level 2 trigger logic	9/92

10. Computing

The volume of data generated by the SDC detector will be larger than that produced by the current generation of collider experiments by close to two orders of magnitude. This large increase will exacerbate the problems of the repeated serial handling of data that is the current approach to data analysis. It seems probable that the current methods will not scale with any grace to the size of data handling needed for the SDC. Fortunately, the software industry is developing what looks to be a far better approach to the problem of providing efficient access to large data sets than the current practice of HEP. The industry solution is the database management system (DBMS), providing an efficient bookkeeping system to keep track of where data is stored; relations between database files, so that related data can be in physically different volumes and even different geographic locations; and indices and other access methods to solve the problem of getting quick repeated access to a subset of the data for selections, without committing oneself to the equivalent of a very condensed DST, where one only has access to the quick search quantities.

Industry is providing answers to the new needs of HEP experiments, but they cannot be taken over whole without further R&D. For one thing, present databases are not as large as the SDC requires by two to three orders of magnitude. Also, compared with extrapolations of present technology, the SDC will need substantial performance improvements to make use of DBMS technology feasible. Joint research involving both industry and experimental physicists is needed to adapt DBMS's to SDC needs, but it seems likely that this approach can be successful.

A joint project was begun in FY1991 with funding from the DOE Scientific Computing Staff under the auspices of the High Performance Computing and Communication Initiative and from the SSC program through the SDC to investigate this adaptation of DMBS methods to the needs of the SDC. The project expects to proceed by first demonstrating the use of current DBMS techniques to analysis of data from a current experiment with functionality at least as good as present HEP techniques. If, as is expected, the initial stages of the project at least reproduce today's functionality in a technology that shows promise of scaling to the needed data volume, then the project will be incorporated into the final software plan for the SDC.

The data access and storage project will need to grow in FY1992. We are in the process of submitting a 5 year proposal (at DOE's request) for additional funding. HPCC requires, among other things, leverage funding. Continued support from the SSC program through the SDC will help to secure continued HPCC funding.

The storage process itself will be increasingly unwieldy without new technology, in spite of advances in the density of magnetic and other media. Two developments deserve study in the context of SDC. The first new approach is the developing IEEE standard for mass storage ("Miller Model"), which provides a hierarchical storage scheme with software file migration employing separate I/O channels for data and control. This is already being studied within the SDC/SSCL collaboration with IBM, but increased funds are needed for the SDC end of this study.

One of the more critical areas of R&D needed for the SDC proposal is the question of the distributed nature of the computing model. To answer this question, some real simulations are necessary. This will entail monies for 1 FTE and simulation tools. This work will necessarily be a close collaboration between the US and Japanese participants of the SDC. Recent discussions with the SSCL indicate that this task can be accomplished with a minimum of expense.

Other advances in the computing and software industries offer the promise of improved productivity both for software developers within SDC and for those who will use the SDC programs for physics analysis. One such area of work is software engineering. The software industry has for some time been arguing that software can and should be planned and designed ("engineered") in ways comparable to the more familiar process of mechanical engineering before construction. Aleph and D0 have made well-known attempts in systematic use of software engineering with positive but mixed results. Techniques have advanced considerably in the several years since those two detector started writing software and it is likely that SDC can adopt an approach to software engineering that can be used consistently and will improve both the process of writing software and the verifiability and maintainability of the resulting code. But even with rapid progress in the industry, software engineering systems are still custom designed for the particular use. It will be necessary for the SDC to study the range of present

practices and choose those elements that will improve the process for high energy physicists. Some parts of the SDC software engineering system will have to be invented outright by us. Other aspects of the software development system will also have to be chosen and will have to fit with the engineering methods. These additional software development tools include code management, library management and distributed library updating.

A task that must be completed during FY1992 is a study determining what software architecture is appropriate for the particular computing model (distributed or centralized) that is selected for the Technical Proposal. This will include a study of the role of standards in constructing the SDC offline computing system. For example, it is felt that a "software bus" approach would allow SDC physicists to make use of the thousands of man-hours already put into existing software. However, in order to take advantage of this private sector resource, we will need to engineer our system such that the programs all fit together. At the 1991 SDC/IBM meeting in Houston, we heard a presentation from an IBM senior software engineer on the role of standards in software architecture. We are proposing to fund a senior engineer to study these issues.

Computing for SDC also needs to begin small efforts that can be identified as engineering rather than R&D. In particular, a conceptual design is needed for the overall computing system for the SDC. This conceptual design will make use of the R&D work outlined above on modular programming methods and software architecture. It will also draw on the results for hardware architecture of the study of centralized and distributed computing systems.

Finally, support is needed at the SSC Laboratory to carry out computing for the development of the proposal. This computing is distinct from the work needed to design the computing system for the SDC when it turns on. Computing during FY1992 is needed for continued simulation of subsystems and of the physics performance of the overall detector. The work of a few people based at SSCL is needed to maintain and make available the simulation codes developed for the SDC. We will also need support for some continued development and improvement of these simulation codes.

The budget needed to accomplish these tasks is shown in Table 17.

Table 17
FY1992 computing system budget

Off-line Computing system	Institution	Requested (K$)
SSCL staff for support of SDC computing	FNAL, IBM, LBL, and SSCL	370
Conceptual design of off-line system, costs, plans	FNAL, IBM, and SSCL	230
Software development tools	LBL and SSCL	270
Modelling and other	FNAL and SSCL	30
	Subtotal	*900**

*On-line system is part of detector cost; off-line computing is not.

11. Project management and detector integration

A full-time project management and detector integration team is required for a detector of the cost, size and complexity of the SDC detector. Included in this team are the following personnel and functions:

- Project Manager
- Project Engineer
- Coordination of cost and schedule estimates
- Budget planning and tracking
- Document management
- Safety
- Quality Assurance
- System integration of detector components
- Interface with civil and accelerator construction

To date these functions have been fulfilled by engineering staff at LBL, interim arrangements within the Collaboration and by staff at the SSCL in the area of civil construction.

During the construction phase of the project, staff resident at the SSCL must be able to fulfill all of these functions. A detailed plan has been formulated to build up the requisite staff at the SSCL. A search have been initiated for both a Project Manager and a Chief Engineer. Until permanent personnel are found, an interim arrangement will be in place. The level of effort at LBL will be reduced and the level at SSCL increased during FY1992. Our goal is to have a fully functional team in place at the SSCL by April 1992.

The funds required to support these activities in FY1992 are given in Table 18.

Table 18
FY1992 project management budget

Project	Requested (K$)
Project planning (includes Project Engineer, cost and schedule estimates and support staff)	600
Project tracking (budgets and tracking of funds spent)	225
Document management and distribution (document databases, electronic storage of documents, distribution and control)	175
Quality assurance	50
Environment, safety and health (safety plans and analysis)	150
Detector systems integration (mechanical and electrical engineers responsible for overall integration of detector components, interface with civil construction and accelerator systems)	1600
Total	*2800*