SDC-91-00026

Don't + Input Tag

SDC
SOLENOIDAL DETECTOR NOTES

CENTRAL TRACKER
RRR & INTERFACE CONTROL DOCUMENT

T.L. RYAN

April 24, 1991

TABLE OF CONTENTS

1.0 Introduction/Purpose/Central Tracking Description

2.0 Performance Requirements (Physics)

3.0 Functional Interface Definition

- 3.1 Electrical (by WBS)
- 3.2 Mechanical

4.0 Physical Layout and Interface Definition

- 4.1 Envelope
- 4.2 Electrical Interface
- 4.3 Mechanical Interface
  - 4.3.1 Fluids
  - 4.3.2 Supports
- 4.4 Handling and Fixtures

5.0 Support System Requirements

- 5.1 Electrical
- 5.2 Mechanical

1.0 INTRODUCTION

The design of the central tracking chamber in the SDC experiment for the Superconducting Super Collider calls for a cylindrical tracking chamber whose length could be as long as six meters. In this report, the resource requirements envelopes and interfaces are established.

The Central Tracking Chamber is conceptually simple. The detection elements, straw tubes or scintillating fiber, are laid in superlayers on the outer surfaces of concentric support cylinders whose central axes coincide with that of the colliding beam (z axis). There are four straw superlayers and two scintillating fiber superlayers. Each straw superlayer is composed of four millimeter diameter straws, and each scintillating fiber superlayer is composed of one millimeter diameter fibers.

In this design, all straw tubes are parallel to the z axis and therefore a superlayer is simply supported on the surface of the cylinder. The straw tube drift cell measure points in r and phi (using the standard cylindrical coordinates). A superlayer provides a line segment of length about 2.5 cm when projected into the r, phi plane.

The scintillating fibers are also placed on the outer surface of the support cylinder. Since the fibers are flexible, they can be laid either along the z axis or wound on the cylinders at small angles with respect to z axis. The design uses scintillating fibers to provide stereo superlayers which measures the z coordinates of the tracks. A stereo superlayer consists of four scintillating fiber layers, two at about +5 degrees and two at about -5 degrees with respect to the z axis. Fibers used in the stereo superlayers will have a diameter of one millimeter.

The cylindrical base on which tubes and fibers are placed is made of a carbon fiber sheet ~.38 mm in thickness. The total radiation length of a superlayer with straws is 0.9% and the total radiation length of a superlayer with fibers is 1.0%. The maximum length of the cylinder is about six meters for the outmost superlayer. Preliminary calculation shows the cylinder sags by less than 25 microns at the center.

The present design calls for four straw tube superlayers and two scintillating fiber superlayers. The overall radiation length of the HCTC is little less than 8% not counting the outermost superlayer (90 degrees with respect to the beam axis).

Above pseudo-rapidity 1.4, the material in the electronics is estimated. The radiation length along 90 degrees is slightly higher because of the mid wire termination inside tubes. The dead region due to the wire termination is expected to be less than 2.5 cm.

2.0 PERFORMANCE REQUIREMENTS

Hybrid Central Tracking Chamber

Elements

Diameter of straws	4 mm
Thickness of straws	37.5 microns of Mylar
Thickness of cathode	1000-1500 angstrom Al or Cu
Diameter of scintillating fiber	1 mm

Support Cylindrical Base for Each Superlayer

Thickness of the carbon fiber cylinder	138 mm

Hybrid Central Tracking Chamber Parameters

Coverage in pseudo-rapidity	-1.5 to 1.5
Magnetic Field	20 Kgauss
Inner radius (first superlayer)	70 cm
Outer radius (last superlayer)	161.95 cm
Length along beam axis	$\pm$ 300 cm
Total radiation length (90 degrees)	8%
Number of superlayers	4 (straw); 2 (scifi)
Number of measurement/superlayer	8z (straw); 2u+2v (scifi)
Resolution/measurement	130 microns (straw) 288 microns (scifi)
Two track resolution	2 mm (straw); 1 mm (scifi)
dpt/pt at 1 Tev	28% (outer tracker along with vertex) 8% (with inner tracker)
Occupancy (L = 10**33)	Straw: 15% (inner); -8% (outer) Fiber: <2%
Gas Mixture	CF4+ Hydrocarbon

3.1 ELECTRICAL FUNCTION INTERFACE

SSC SDC HYBRID CENTRAL TRACKER
BASIS 192K WIRE CHANNELS & 100K SCIFI CHANNELS
64 CHANNELS PER SUB-SET(FIRST LEVEL DCC(DATA COLLECTION CHIP))
4 SUB-SETS(256 CHANNELS) PER SET(FINAL LEVEL DCC)
FAN-IN IS THE CONNECTOR BOX WHERE CHANNEL SETS ARE LAUNCHED INTO THE DAQ FIBER.

WBS NO.	ELEMENT NAME	CONDUCTORS (per SET)	SIZE/DIA cm	VOLTAGE	CURRENT amps	TOTAL NO. (SET TO FAN-IN)	TOTAL POWER watts
1.2.3 1.2.10	STRAW TUBE SYSTEM ELECTRONICS WIRE ASSEMBLY						
	HV Cable	1	0.32	2KV	0.0013	750	1950
	LV Cable	2	.005 X 2.5	5	1		3750
	Logical Signals						
	Clock	2	.005X.05	0-5			
	L1 Accept	2	"	"			
	L2 Accept	2	"	"			
	L2 Strobe	2	"	"			
	Resynch	2	"	"			
	Reset	2	"	"			
	Test Time	2	"	"			
	Data Ready	2	"	"			
	Grant	2	"	"			
	Data Bus	18	"	"			
	Data In	1	"	"			
	Slow Control Clock	1	"	"			
	Data Out	1	"	"			
	Shift/Load	1	"	"			
	Read/Write	1	"	"			
	Cable For Above LV & Logical Conductors.	1	0.1 X 5	NA	NA	750	NA

3.2.1 MECHANICAL FUNCTION INTERFACE

WBS NO.	ELEMENT NAME	NO.PER SUP. LAYER	DIAM cm	FLOW l/sec	MEDIUM	PRESSURE MPa	PRESSURE DROP MPa	TEMP RISE C	NO. OF SUPER LAYERS	TOTAL MASS FLOW scc/sec
1.2.5	COOLING ASSEMBLY									
	Electronics Cooling Supply	4	1	0.7	Air	0.1	0.0017	_	7	19600
	Electronics Cooling Return	4	1	0.7	Air	0.1	0.0017	18.5	7	19600
	Straw Cooling Supply	1	1	TBD	Air	TBD	TBD	TBD	7	TBD
	Straw Cooling Return	1	1	TBD	Air	TBD	TBD	TBD	7	TBD
	DRIFT GAS									
	Drift Gas Supply	4	1	0.086	CF4/ISO	0.1	TBD	TBD	7	2413
	Drift Gas Return	4	1	0.086	CF4/ISO	0.1	TBD	TBD	7	2413

3.2.2.1 OUTER TRACKER FIBER COUNT
SCINTILLATING FIBERS

	Layer	Distance from center (mm)	Layer type	Number of fibers
SUPERLAYER 1	1	675	A	22670
	2	725	A	24295
Total				46965
SUPERLAYER 2	1	975	A	32725
	2	975	U	32823
Total				65548
SUPERLAYER 2	1	1025	V	34197
	2	1025	A	34298
Total				68495
		TOTAL NUMBER OF FIBERS		181008

3.2.2.1
(con't)

OUTER TRACKER COUNT
STRAW TUBES

	No. of Layers	Nominal Distance from Center (mm)	No. of Straws per Layer	No. of Straws per half
SUPERLAYER 3	6	1217	1912	11472
SUPERLAYER 4	6	1350	2120	12720
SUPERLAYER 5	6	1482	2328	13968
SUPERLAYER 6	9	1614	2536	22824

TOTAL STRAW COUNT PER HALF	60984
TOTAL STRAW COUNT	121968

3.2.2.2

INTERMEDIATE TRACKER FIBER COUNT
SCINTILLATING FIBERS
Eight Layers per Superlayer

	Layer	"Z" Location (mm)	Distance From Center ID (MM)	Distance From Center OD (mm)	Number of Fibers
SUPERLAYER Z1	1 thru 8	3200	520	1090	34851
SUPERLAYER Z2	1 thru 8	3600	585	1220	39207
SUPERLAYER Z3	1 thru 8	3950	650	1340	43563
SUPERLAYER - Z1	1 thru 8	- 3200	520	1090	34851
SUPERLAYER - Z2	1 thru 8	- 3600	585	1220	39207
SUPERLAYER - Z3	1 thru 8	- 3950	650	1340	43563
			TOTAL FIBER COUNT		235242

3.2.2.3 SILICON TRACKER FIBER COUNT
TO BE SUPPLIED BY LOS ALAMOS

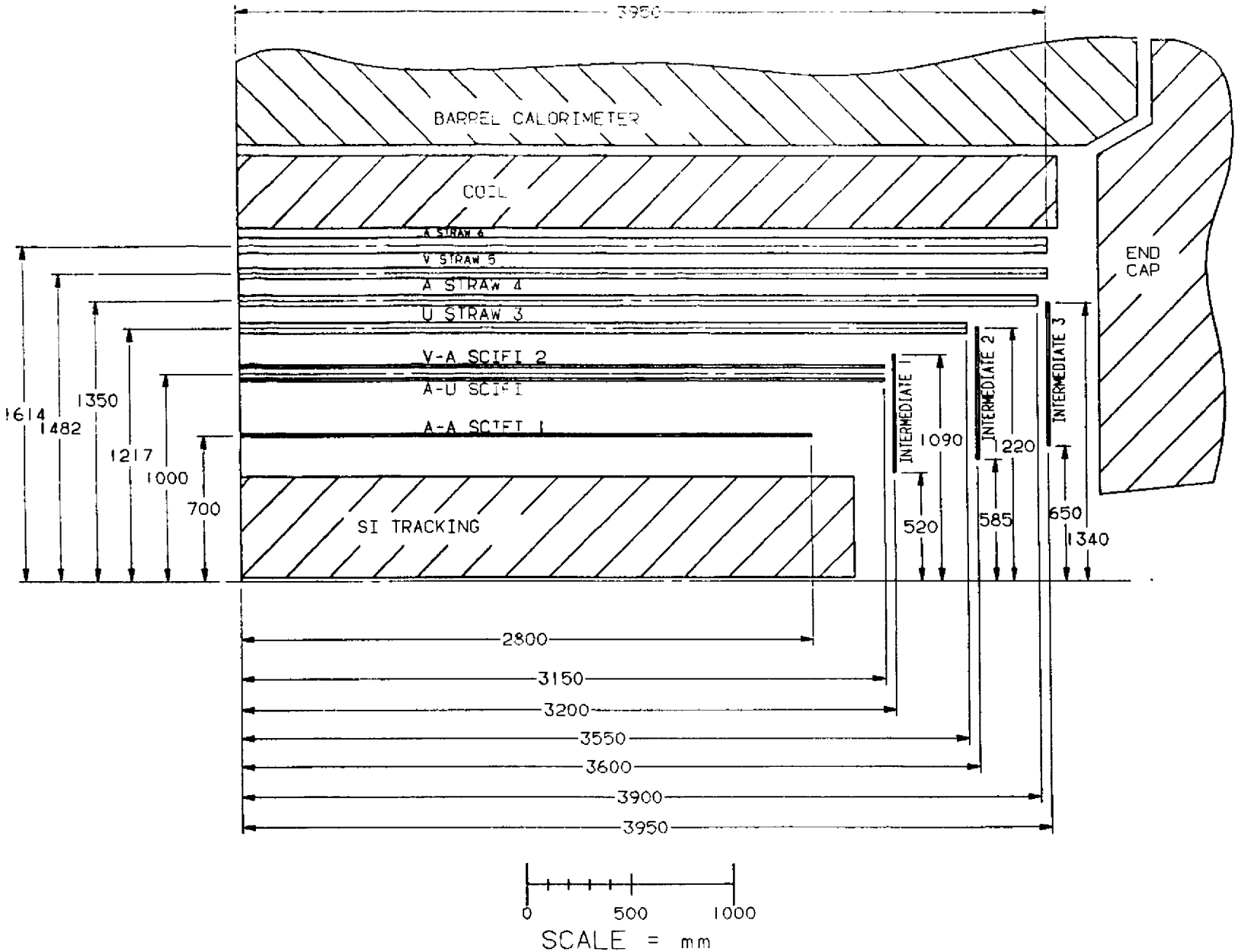

FIG 4.1.1 BASELINE CENTRAL TRACKER CONCEPT

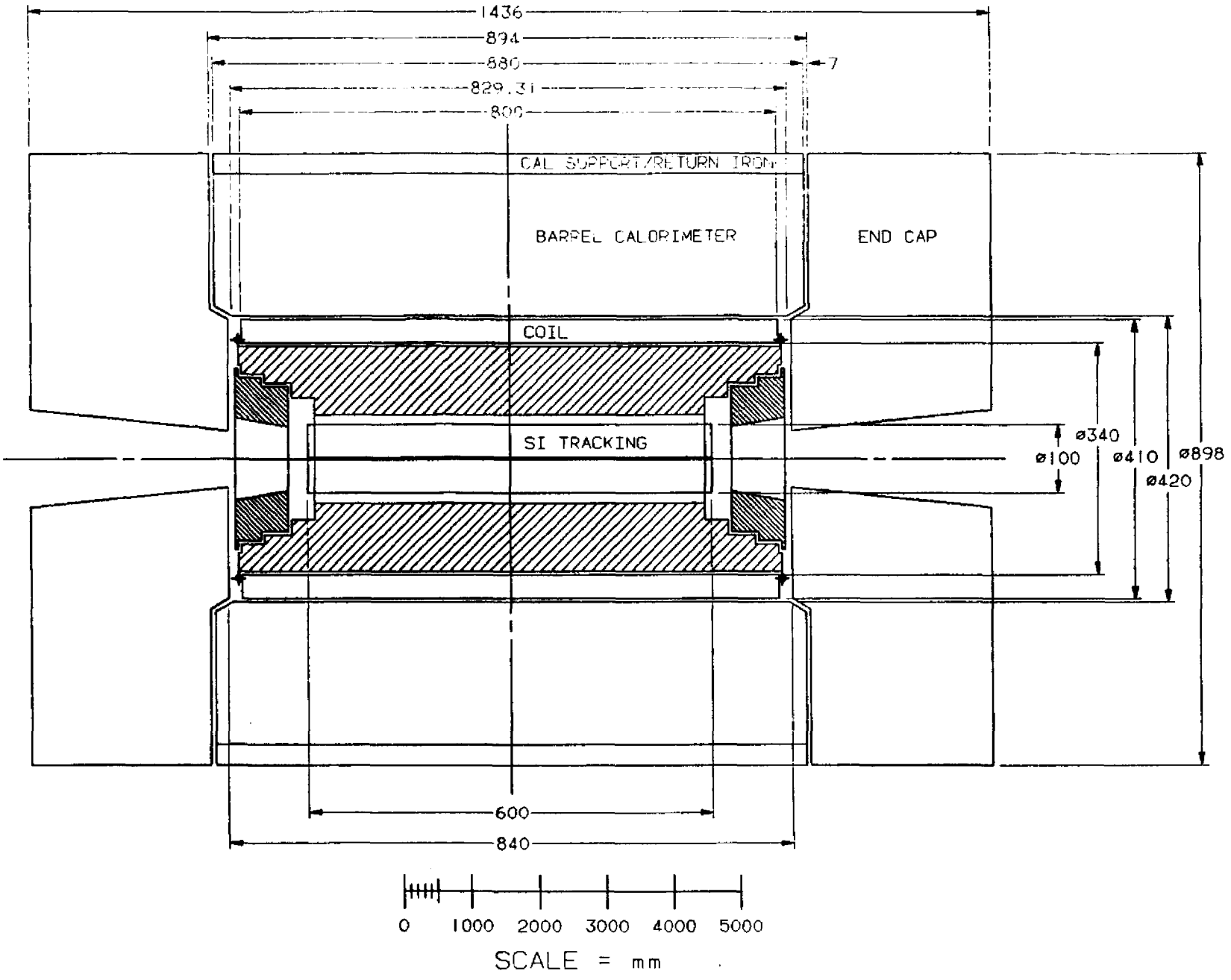

FIG 4.1.2 CENTRAL TRACKER LOCATION

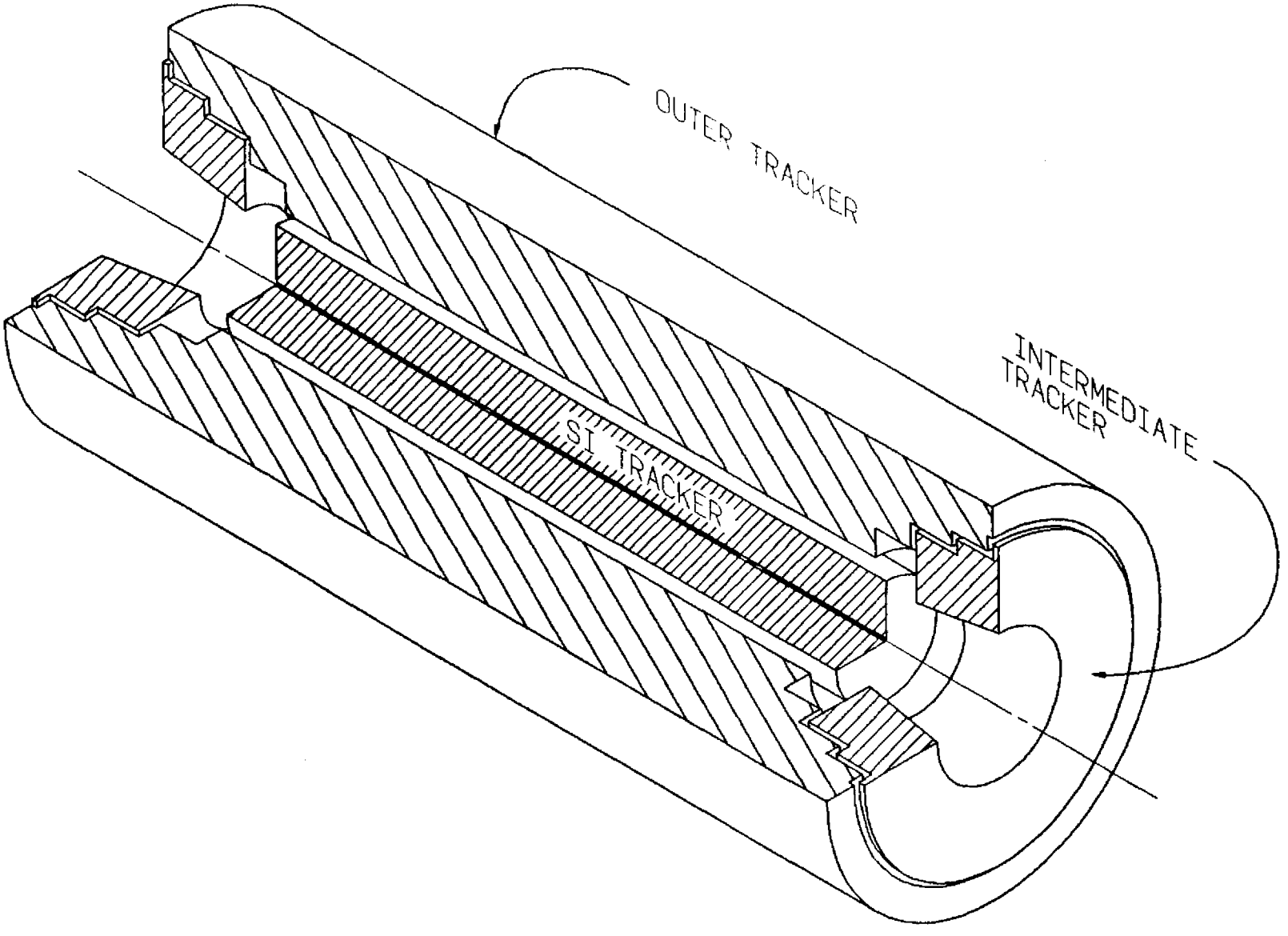

FIG 4.1.3 CENTRAL TRACKING ASSEMBLY

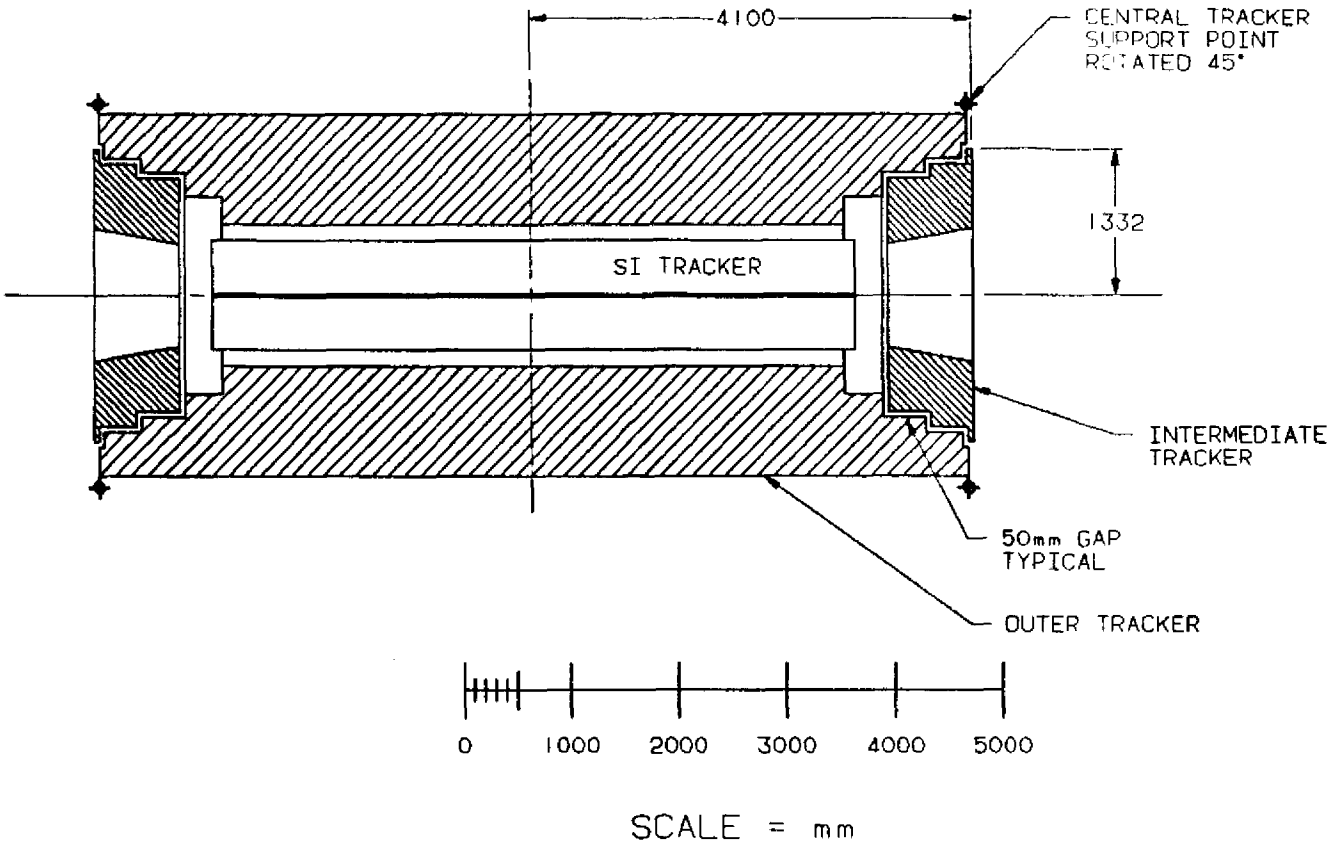

FIG 4.1.4 CENTRAL TRACKING ASSEMBLY

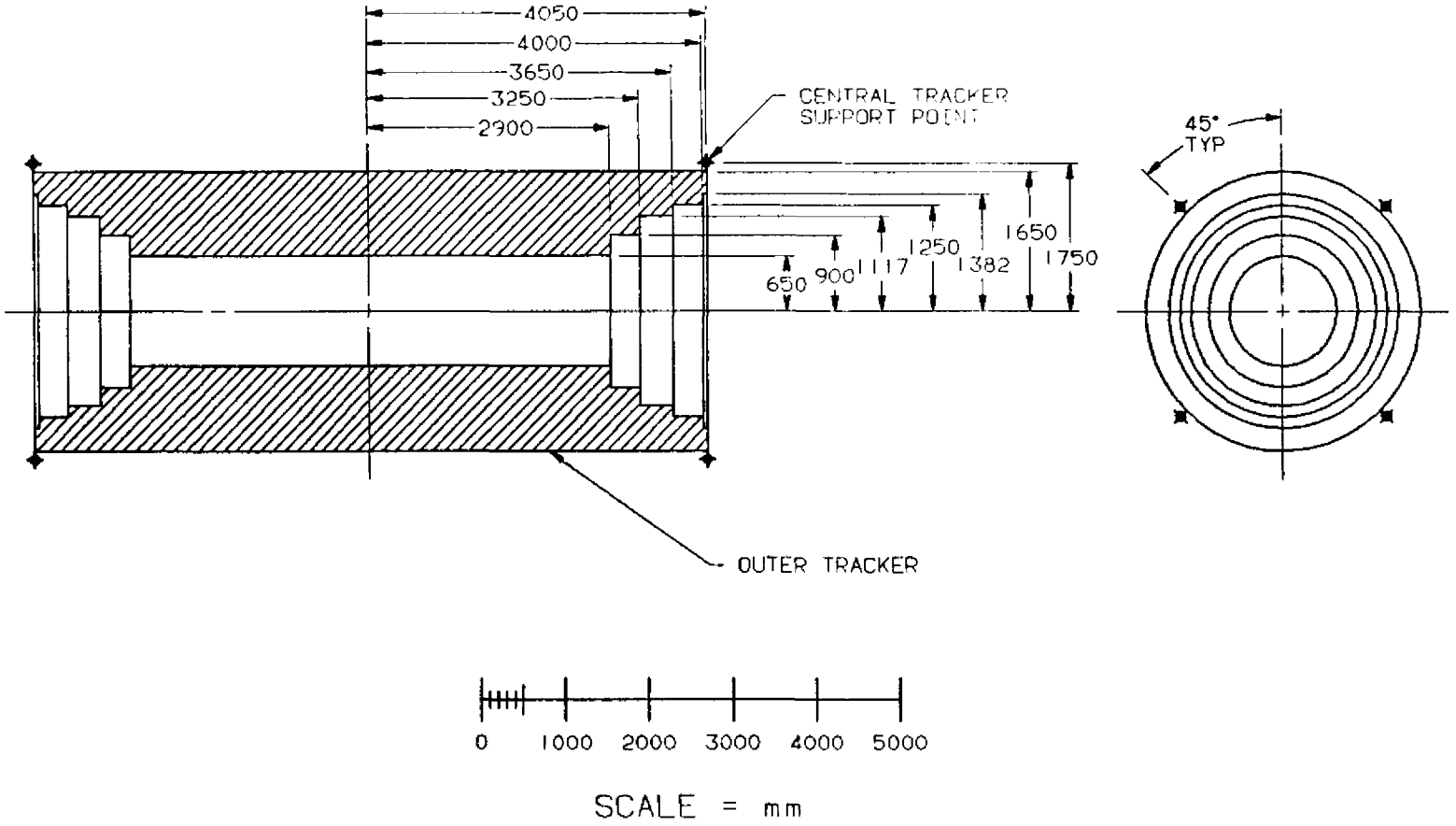

FIG 4.1.5 OUTER TRACKER ENVELOPE

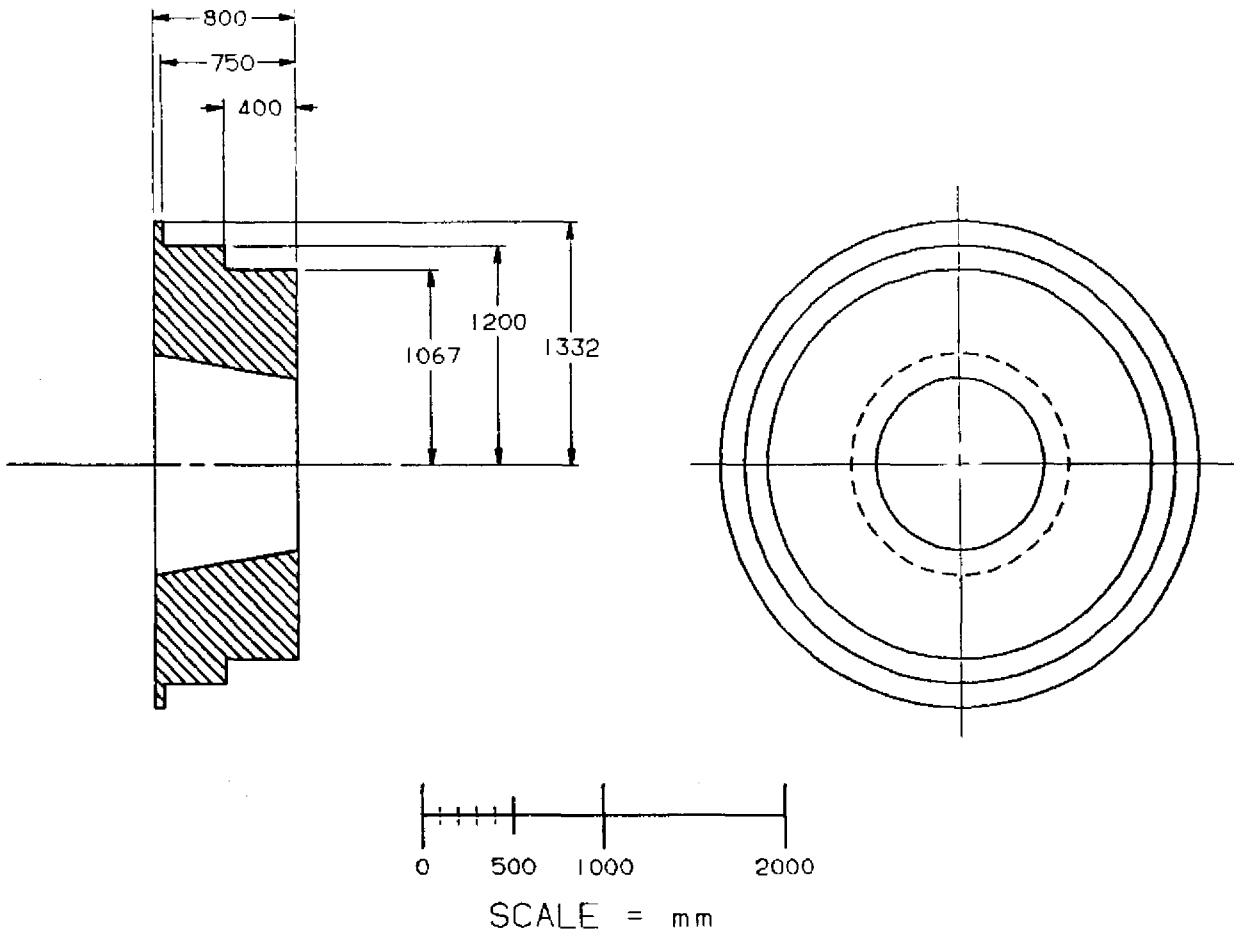

FIG 4.1.6 INTERMEDIATE TRACKER ENVELOPE

TO BE SUPPLIED BY
LOS ALAMOS

FIG 4.1.7 SILICON TRACKER ENVELOPE

FIG 4.2 ELECTRICAL INTERFACE

FIG 4.3.1 FLUIDS

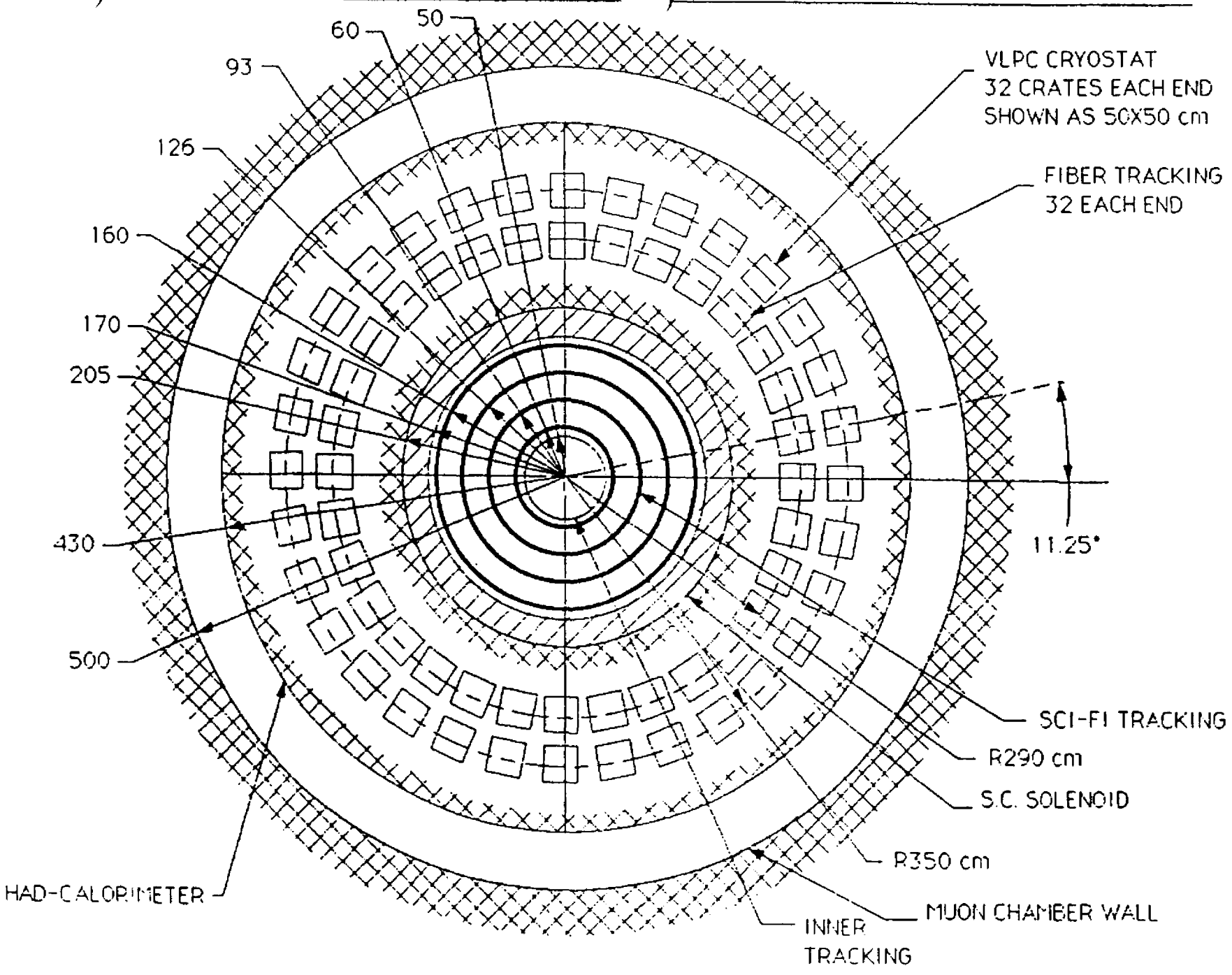

FIG. 4.3.1 SCI-FI MECHANICAL INTERFACE-CRYOSTAT

ornl 2/8/91

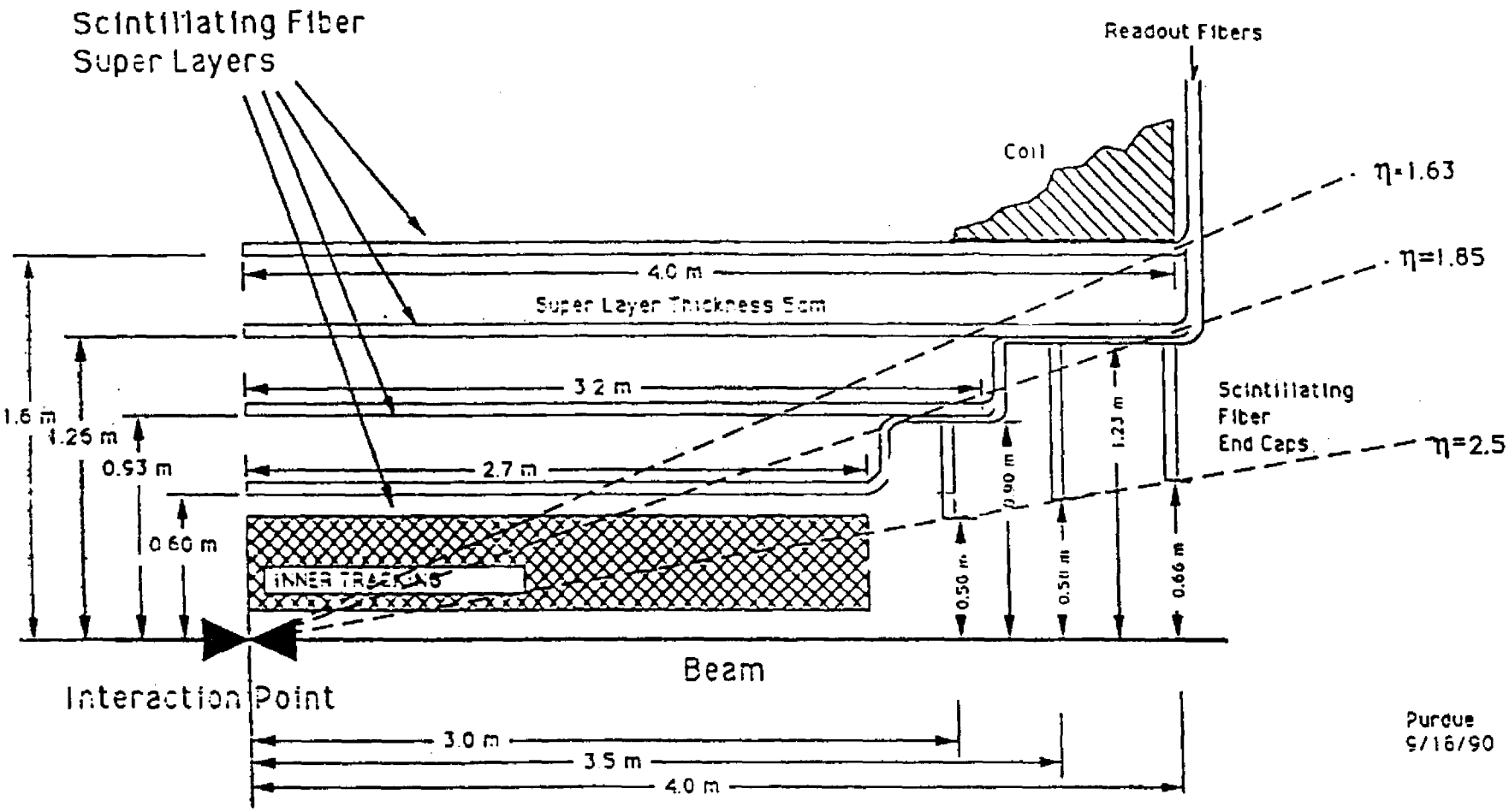
Scintillating Fiber
Super Layers
Readout Fibers
Coil
η=1.63
η=1.85
η=2.5
4.0 m
Super Layer Thickness 5cm
3.2 m
2.7 m
1.6 m
1.25 m
0.93 m
0.60 m
0.50 m
0.90 m
0.50 m
1.23 m
0.66 m
Scintillating
Fiber
End Caps
INNER TRACKING
Beam
Interaction Point
3.0 m
3.5 m
4.0 m
Purdue
9/16/90

5.0 SUPPORT SYSTEM REQUIREMENTS