SDC-91-00018

SDC
SOLENOIDAL DETECTOR NOTES

CENTRAL CALORIMETER CONFIGURATION
A STUDY REPORT TO THE SDC TECHNICAL BOARD

T. Kirk, A. Wicklund

April 11, 1991

SDC-91-00018

CENTRAL CALORIMETER CONFIGURATION
A STUDY REPORT TO THE SDC TECHNICAL BOARD

by

Thomas B. W. Kirk and A. Barry Wicklund
Argonne National Laboratory
High Energy Physics Division

April 11, 1991

Introduction

The single most important determinant of the overall Central Calorimeter (CC) shape is the criterion for depth of hadron shower containment. This criterion and its rapidity dependence is discussed in a companion document to this report titled "Depth Requirements in SSC Calorimeters" by D. Green et al., SDC-91-00016. The conclusion reached there is that the calorimeter should be 10 λ thick at $\eta = 0$ and increase smoothly to 12 λ at $\eta = 3$. We adopt this criterion in the following discussion.

The internal structure of the CC has several goals to satisfy:

- good (98-99%) containment of electromagnetic (EM) showers in the EM section;

- excellent ($18\%/\sqrt{E} + 1\%$) energy resolution for single electrons and photons at 90 degrees;

- excellent (i.e. $\Delta\eta = .001$; $\Delta\phi = .002$) angular resolution for pure EM showers;

- good hadron ($40\%/\sqrt{E} + 2\%$) energy resolution to allow hadron jet measurements with errors dominated only by the intrinsic terms (such as neutrino energy loss);

- sufficient longitudinal segmentation (2 EM, 2 Hadron) to allow good EM/Hadron discrimination.

We will argue below that these goals can be realized by a 'compensating' calorimeter with the following properties:

1) a parallel-plate barrel EM calorimeter consisting of 5.5 mm Pb plates (10.5 mm in the endcap) interspersed with 2.5 mm scintillator plates; the scintillator plates are read out via two, 1 mm diameter wavelength-shifter, optical fibers per plate; the EM section is divided into two longitudinal segments: the front section, EM1, comprises all the cells in front of the Shower-Max Detector (SMD); the rear section, EM2 comprises all the remaining EM cells;

2) a Shower-Max Detector placed at the point of maximum shower development for showers of energy in the range of 20-100 GeV ($X_{omax.} = 8$); this SMD should have transverse position resolution given by: (a) position resolution of ~ 3 mm which is readily achievable and gives $\sigma(\Delta\eta) \sim 0.001$; (b) shower shape measurement which requires segmentation of 1/2 R_M ~ 15 mm;

3) a main hadron calorimeter section, HAC1, consisting of 15.5 mm Pb plates interspersed with 2.5 mm scintillator plates; the scintillator plates are read out via two, 1 mm diameter wavelength shifter optical fibers per plate;

4) a barrel catcher hadron calorimeter section, HAC2, consisting of 35.5 mm mild steel plates interspersed with 2.5 mm scintillator plates (the Fe structure will be different in the endcap); the scintillator plates are

read out via two, 1 mm diameter wavelength shifter optical fibers per tile;

5) a mild steel structural shell outside the barrel and endcap calorimeters to support the calorimeter wedges and carry the mechanical forces; these shells, along with the steel absorbers in the HAC2 sections, return the magnetic flux from the central solenoid magnet.

6) an array of photon transducers (nominally 1.0" diameter PMTs) plus initial signal conditioning and level 1 trigger electronics positioned just outside of and attached to the calorimeter support shell.

A drawing of this calorimeter showing its main dimensions and properties is given as Fig. 2-1. An end view of the Endcap is given in Fig. 2-2. Tables and Figures in Appendix A show details of the EM1, EM2, HAC1, and HAC2 unit cell structure. The absorber and scintillator plates are aligned parallel to the beam throughout the barrel calorimeter and are perpendicular to the beam in the endcaps.

The compensation properties for the proposed Pb/scintillator CC configuration have been extensively studied by P. K. Job and James Proudfoot in a recent SDC Note, "Estimation of Hadronic and EM Resolution for Scintillator Plate Calorimeter Configurations", SDC-91-00017. In this Note, the authors show that for the proposed barrel geometry, the e/h ratio is 0.98 ± 0.02 and the hadron energy resolution is $35\%/\sqrt{E} + 2\%$.

Because these results are the product of computer-based simulations, it will be important to confirm the results experimentally. This is a principal goal of Test Experiment T841, a study of Plate-Fiber Calorimeter Properties to be carried out by members of the SDC Collaboration in Spring/Summer 1991 at Fermilab.

EM Shower Characteristics

To complement the discussion of hadron shower properties given in SDC-091-00016, we discuss a few of the properties of EM showers here by way of motivating the design choices proposed:

High energy EM showers can be defined as those in which the entering electron or photon has total energy E_o very large compared to the 'critical energy' ε_o in the passive absorber. The values for ε_o in Pb and Fe are:

$$\varepsilon_o(\mathrm{Pb}) = 9.6 \text{ MeV}$$
$$\varepsilon_o(\mathrm{Fe}) = 29.4 \text{ MeV} .$$

The critical energy is the energy of an electron for which it has equal probability to range out by ionization energy loss or to bremsstrahlung again. This ε_o energy scale is a very useful concept in EM shower calculations; taken together with the concept of the EM radiation length X_o, a very useful parametrizations of EM showers in various absorbers can be obtained.[1]

(2.1) $$\frac{1}{E_o}\frac{dE}{dt} = \frac{b(bt)^{a-1}e^{-bt}}{\Gamma(a)}$$; $\Gamma(a)$ is the gamma function,

b establishes a scale depth ($b \approx 0.5$).

The CDF Collaboration has done a careful fit to measured electron shower data and uses this data to generate a two-dimensional analytic parametrization (t,r) for data in their Pb-scintillator calorimeter. The result is given by:

(2.2) $$\frac{1}{E_o}\frac{dE}{dtdr} = \frac{b(bt)^{a-1}e^{-bt}}{\Gamma(a)}\left[\frac{re^{-r/r_1} + rge^{-r/r_2}}{r_1^2 + gr_2^2}\right]$$

[1]Particle Properties Data Booklet, Particle Data Group, April 1990.

$b_{Pb} = 0.43 + 0.009\ \ln\ [E_o/\varepsilon_{oPb}]$;
$a_{Pb} = 1 + \ln[E_o/\varepsilon_o]$;
$g_{Pb} = 0.0052$;
$r_{1Pb} = 0.076 + 0.023\ t$ (cm)
$r_{2Pb} = 0.52 + 0.089\ t$ (cm)

Two additional concepts are useful in this discussion: a) t_M, the depth in the shower (radiation lengths) at which the number of particles is maximum, 'shower max' or SM; (b) t_F, the depth at which a fraction f of the shower's energy has been absorbed. Expressions for these parameters are given by:

(2.3) $$t_M = (a-1)/b$$

$$t_M(Pb) = (1 + \ln[E/\varepsilon_o])/(0.43 + .009\ \ln\ [E/\varepsilon_o])$$

(2.4) $$f_{EM} = \int_0^{t_F} \frac{1}{E_o} \frac{dE}{dt}$$

We adopt a parametrization of the data of CALT-68-494 to derive analogous expressions for the containment of hadron showers in a Pb-based absorber:

(2.5) $$f_{HAD} = 1 - e^{-t_F/\lambda}$$

(2.6) $$\lambda(Pb) = 0.26 + 0.29\ \ln[E_o]\ \text{(proton lambdas)}$$
$$\lambda_o(Pb) = 194\ gm/cm^2$$

where, E_o = hadron energy in GeV and t_F is the depth in proton nuclear interaction lengths.

The same formula can be expressed in terms of Pb-radiation lengths by substituting 30.4 Pb radiation lengths per Pb interaction length in the formula.

From the statements above we see that the absorption of EM showers is a matter of exponential buildup followed by exponential absorption. This gives rise to logarithms that characterize the shower max. and leakage depth parameters. Figure 2-3 shows the properties graphically.

Figure 2-3, in which both f and (1-f) are graphed for several energies versus depth points up two important properties of EM showers:

1) leakage out the back can be made negligible (< 1%) for showers up to several TeV by small (logarithmic) depth increases;

2) the rapid shower buildup at the front of the shower implies that non-active material in front of the detector (solenoid coil, etc.) will quickly become a serious concern. Before exploring this issue in detail, we go on to some other general points.

For a perfectly constructed EM calorimeter, the energy <u>resolution</u> for measurement of EM showers of isolated electrons and photons with good containment is dominated by the sampling frequency s = dN/dt, i.e. the number of shower samples taken per unit length. In our EM calorimeters, the sampling medium is scintillator plastic, a material whose light yield response to ionizing radiation is quite linear with shower energy deposition in the range relevant to SDC.

If we achieve our light yield goal of > 2 photoelectrons/minimum-ionizing particle per layer (pe/mip/layer), we expect the shower energy resolution from systematic and calibration sources of error to equal the stochastic term at energies of about 100 GeV.

<u>Containment</u>

The average containment for EM showers is shown in Fig. 2-3. From this plot we see that no more than 22 X_o are needed to absorb 10 GeV electrons at the 99% containment level. This rises to 24 X_o for 100 GeV and 28 X_o for 1 TeV, respectively, for the same containment fraction. We will set our EM1 +

EM2 thicknesses at 22 X_o to allow fine-grained absorption and measurements of electrons.

The small leakage out the back for showers above 100 GeV or so is not a problem because the HAC1 section has adequate resolution to measure the escaping fraction of the shower energy. The overall energy resolution will not be compromised by this choice of total EM section thickness. (This is not a problem for CDF, with 18.5 X_o.

Electron-Hadron Separation

Electron-hadron separation can be achieved at the ~ 10^{-3} level, using the lateral and longitudinal shower profiles in the calorimeter. This very important calorimeter characteristic is explored in the following section by means of related studies undertaken with beams of identified electrons and hadrons in the CDF calorimeter.

For example, Fig. 2-4 shows the distribution of E/p for 50 GeV hadrons and electrons in the CDF detector. Here, "E" denotes the energy in the electromagnetic part of the calorimeter (18.5 X_o Pb-scintillator sandwich), and "p" denotes momentum. The hadron spectrum falls smoothly toward the end point at E/p = 1, while the electron spectrum is essentially gaussian, with a small tail due to leakage fluctuations.

Thus, depending on the ratio of electron and hadron production cross sections, the electrons can in principle be identified by observation of the inclusive peak at E/p=1. In practice, the calorimeter trigger will veto hadrons with significant hadronic leakage, and with any tight cut on the hadronic fraction, hadrons will exhibit a (broad) peak at E/p = 1. Figure 2-5 shows the distribution in hadronic fraction ("Had/E_{tot}", where "Had" denotes energy in the hadronic calorimeter compartment, and "E_{tot}" denotes total calorimeter energy) for 50 GeV electrons and hadrons. The electron spectrum peaks sharply at small values of Had/Etot, with roughly exponential falloff, while the hadron distributions are smooth. Further requirements can be made on the lateral and longitudinal shower development, using the profile detector at shower maximum (6 X_o in the case of CDF). The requirement that the lateral

shower shape be consistent with an electron gives the hadron distribution shown in Fig. 2-5(b); the further requirement of large pulse height at shower maximum gives the hadron distribution in Fig. 2-5(c), which is essentially flat.

Figures 2-4 and 2-5 have been scaled to correspond to equal numbers of electrons and pions (pions with E/p <0.5 have been removed from the sample, but are taken into account in this scaling). Overall, 1.7% of all pions have a hadronic fraction less than 10%, and it is clear from Fig. 2-5 that 90% of these can be removed by making tighter cuts on Had/E_{tot} and on shower maximum response, while retaining 90% efficiency for real electrons. Thus, pion rejection at the level of 2×10^{-3} is readily achieved. It is plausible that the hadrons that survive cuts on hadronic leakage and on shower max. response are the ones that (a) shower early in the EM calorimeter, and (b) have a predominantly neutral pion component in the first interaction. Depending on the depth of the first interaction, we would expect these photon-enriched hadron showers to exhibit longitudinal development similar to that for primary electrons.

Correlations in the longitudinal shower development are shown in Figs. 2-6 (50 GeV electrons) and 2-7 (50 GeV hadrons). Here we plot the average pulse height in the EM compartment ("CEM/P") and the average pulse height in the shower max. detector ("CES/P*"), as functions of the hadronic leakage. As might be expected, the EM energy is linearly correlated with the hadronic fraction (energy is conserved in the calorimeter). The correlation between the pulse height at shower max. and the hadronic leakage is even more striking, with electrons and hadrons exhibiting nearly identical response, for a fixed value of Had/E_{tot}. This is qualitatively consistent with our premise, that the hadrons which fake electrons by having small hadronic leakage, are early showering and have longitudinal profiles consistent with an ensemble of photons (eg., similar to single electrons.)

To avoid confusion, we note that in the absence of any selection on Had/E_{tot}, the shower max. pulse height by itself provides considerable electron-hadron separation as shown in Fig. 2-8.

The lateral shower development is a different matter.

Figure 2-9 shows a quantity that describes the similarity of the lateral shower profile at 6 X_0, with that for an electron shower, again as a function of hadronic leakage. Here hadrons and electrons are well separated for all values of hadronic leakage. Presumably the hadron showers consist of an aggregate of low energy photon showers, which have a different lateral profile than a single high energy electron shower.

In principle, the hadron rejection can be further improved by requiring VERY early shower development, by sampling the shower at 1-2 X_0. Since the relevant hadrons may be viewed as an aggregate of low energy photons, and since photon showers develop later than electrons (by 0.8 X_0 on average), we would expect significant pulse-height suppression for hadrons relative to electrons. This is shown in Fig. 2-10; CDF was instrumented with a gas proportional detector at 2 X_0, and with this sampling the expected separation of electrons and hadrons is evident. Again, there are strong correlations in the longitudinal shower development, but the "preshower" sampling gives an additional factor of 2-3 rejection of hadrons, as compared with the calorimeter and shower max. detector alone. Figure 2-11 shows the energy dependence of the electron response, and the 95% containment pulse height for minimum-ionizing hadrons.

The response is highly nonlinear, which effectively amplifies the hadron rejection at lower energies. Thus, assuming that a fine grained shower max. detector is available to record the lateral shower profile, and that a pulse height measurement can be accomplished at 1-2 X0, we can set forth some general guidelines on electron-hadron separation:

a) The EM compartment should be thick enough to contain electron showers at the 96-98% level (where fluctuations are comparable to the intrinsic resolution). The hadron to electron ratio is likely to be fairly insensitive to the precise depth of the EM compartment, since the shower max. detector requirements will force the hadronic leakage to be similar for electrons and early-showering hadrons.

b) The ratio of radiation to absorption lengths should be as large as possible in the EM compartment (high Z absorber.)

c) The sampling granularity should be as fine as possible in the EM compartment, consistent with cost and technical constraints, in order to optimize the E/p resolution.

The lowest energies of practical interest to the SDC physics program are around 10 GeV in Et, at least for triggering purposes. For these energies, a value of around 20 X_0 is optimal for the EM compartment. To guarantee good containment of higher energy showers, we choose a thickness of 22 X_0 at 90°, increasing to 25 X_0 at rapidity of 1.5 in the barrel. Figure 2-12 shows the hadronic leakage distributions in CDF for electrons from 25 to 150 GeV, for 19.5 X_0. There is little detectable variation with energy, and we expect that the proposed thickness will provide quite adequate containment for the SDC.

We note that in addition to providing hadron rejection, both the "preshower" detector and the Had/E_{tot} leakage can be used to tune the electron energy resolution, by compensating for losses in the coil and back-leakage fluctuations, respectively.

Mechanical Properties

The outer profile of the CC has been seen to depend on many detailed properties of the EM1, EM2, HAC1 and HAC2 sections. So far, these have been discussed only in their physics context. Here, we identify some mechanical aspects of the CC and discuss how these get incorporated in the design of the overall device.

First, because the barrel section is constructed of plates, all of which are parallel to the beam, and because the thickness seen by particles emitted from the origin increases as $1/\sin\theta$, the calorimeter will tend to have a 'watermelon' shape for particles of fixed energy. On the other hand, the physics variable of interest is typically $E_T = E \sin\theta$, so the actual energies of interest will increase as $1/\sin\theta$. The penetration of these particles

increases logarithmically with energy, so the overall scaling rule for thickness with angle to the beam is given by:

$$\lambda(\theta) = \lambda(90^{\circ})\left[1.0 + \ln\,(1/\sin\,\theta)\right] .$$

This holds for both the EM and hadron calorimeter section thicknesses.

Given the basic thickness scaling law, we derive a detailed plan for towers and cells as given in Appendix A.

The EM1 and EM2 and HAC1 sections are based on cast Pb absorber with cast-in slots to accommodate the scintillator plates and optical fibers. The HAC2 section is based on mild steel plates interspersed with tile/fiber gaps and structural steel spacers to maintain the plate separation.

To accommodate the variable thickness of the towers (measured at 90° to the beam), a stepped profile is used in the barrel. The endcaps are chosen to be of constant thickness, reflecting the fact that the particle energies cannot exceed the beam energy of 20 TeV. In order to accommodate the stepping in the barrel, the EM, HAC1 and HAC2 cells are chosen as integral multiples of the EM1 cell thickness. Hence, barrel EM1 and EM2 cells are 1.0 cm thick (1.5 cm in the endcap), HAC1 cells are 2.0 cm and HAC2 cells are 4.0 cm. How this all fits together can be seen in the Tables and Figures of Appendix A.

Note that the passive absorber plates lie in planes parallel to the beam in the barrel and are normal to the beam in the endcaps. The steel HAC2 sections and the outer structural steel cylinder carry the return flux of the solenoid magnet. Details of the magnetic field shapes, stresses and magnetic forces are under analysis at Fermilab. These appear to lie within acceptable stress limits, but, of course, display the expected field nonuniformities near the ends of the solenoid.

In both the barrel and the endcaps, thin stainless steel bulkheads oriented perpendicular to the beam axis are used to carry the gravitational loads from the cast Pb elements. In the barrel, each Pb plate is essentially hanging from a stainless plate at each end of its 10 cm to 30 cm span. In the endcaps, stainless steel bulkheads tie the Pb plates to steel supports in a

manner yet to be determined in detail. The bulkheads carry the main gravitational loads and the Pb is only unsupported over short (~ 20 cm) spans.

Finite element method studies are underway as part of the Preliminary Engineering Studies Program of SDC to verify that all the barrel and endcap elements presented in this geometrical model will not exceed allowable stress levels or deform elastically beyond allowed deformation limits. These studies will be complete by October 1991. Preliminary results show all stresses in the critical barrel EM calorimeter are well within allowed limits.

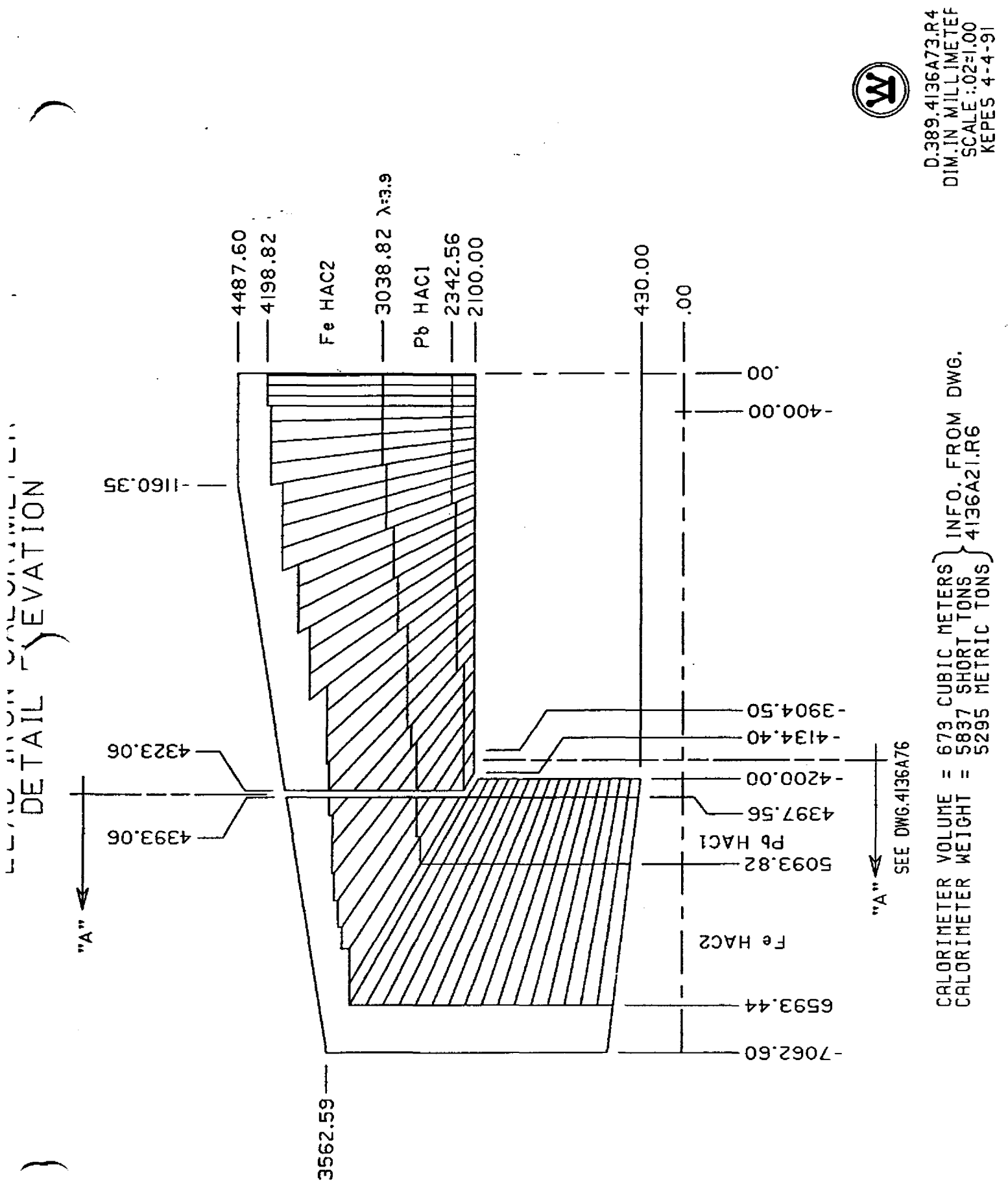

Fig. 2-1 A quarter cross section view of the central barrel and endcap calorimeter critical dimensions (mm). The EM and first compartment hadronic calorimeters are cast lead; the second hadronic calorimeter compartment is mild steel and carries the return magnetic flux of the solenoid magnet.

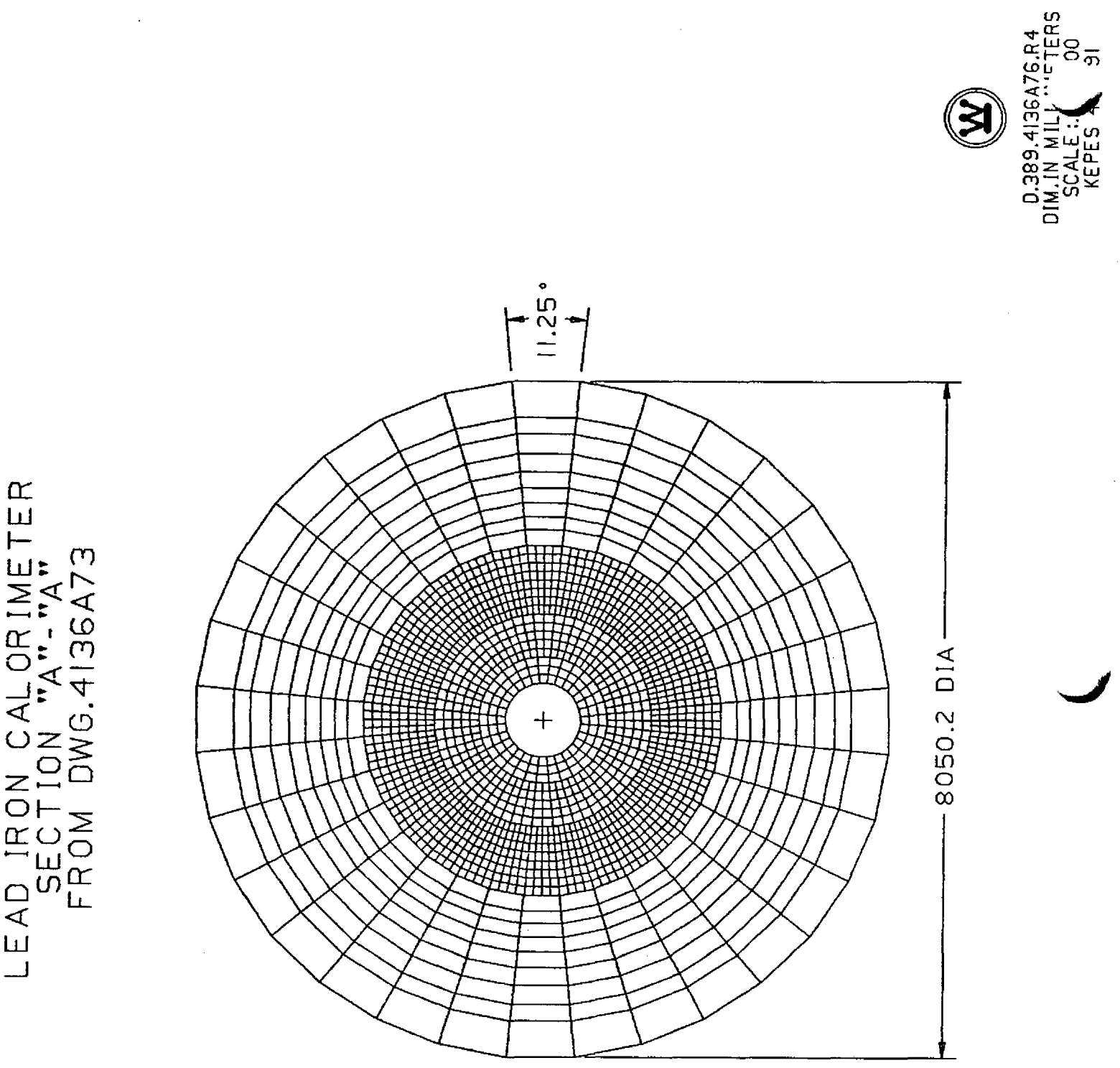

Fig. 2-2A An end view of the Endcap Calorimeter is shown. From this drawing, the endcap tower segmentation can be seen. A total of 32 mechanical wedges or sector elements are need at each endcap.

LEAD IRON CAL)IMETER
CALORIMETER END CAP
A SINGLE MODULE INSIDE BEAMLINE VIEW

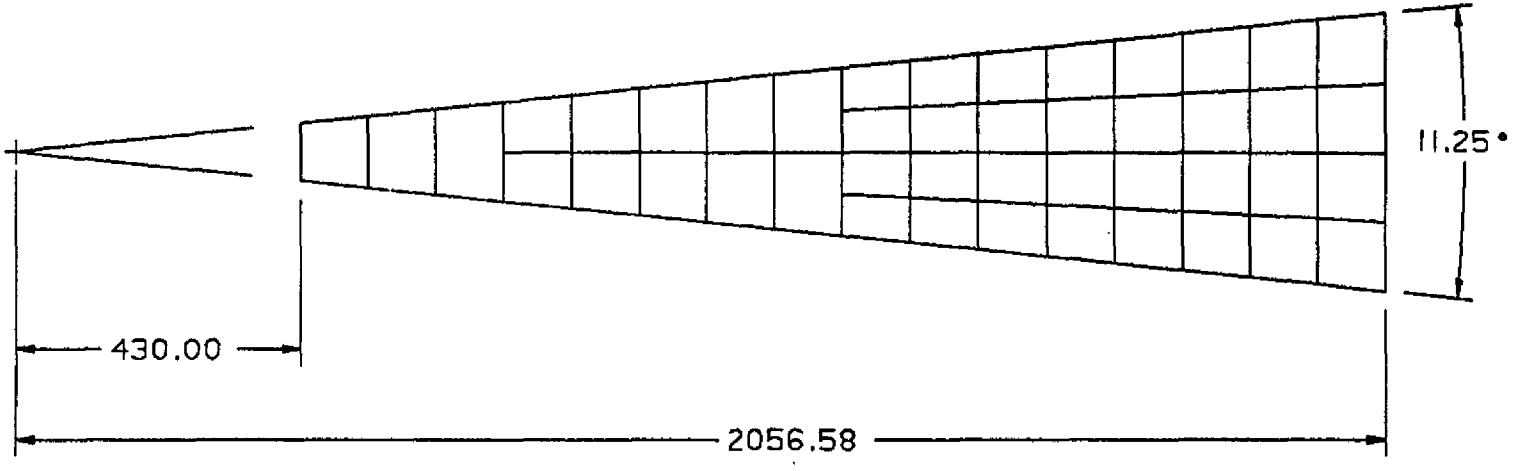

D.389.4136A83.R3
DIM.IN MILLIMETERS
SCALE :.09=1.00
KEPES 4-4-91

Fig. 2-2B Details of endcap calorimeter segmentation.

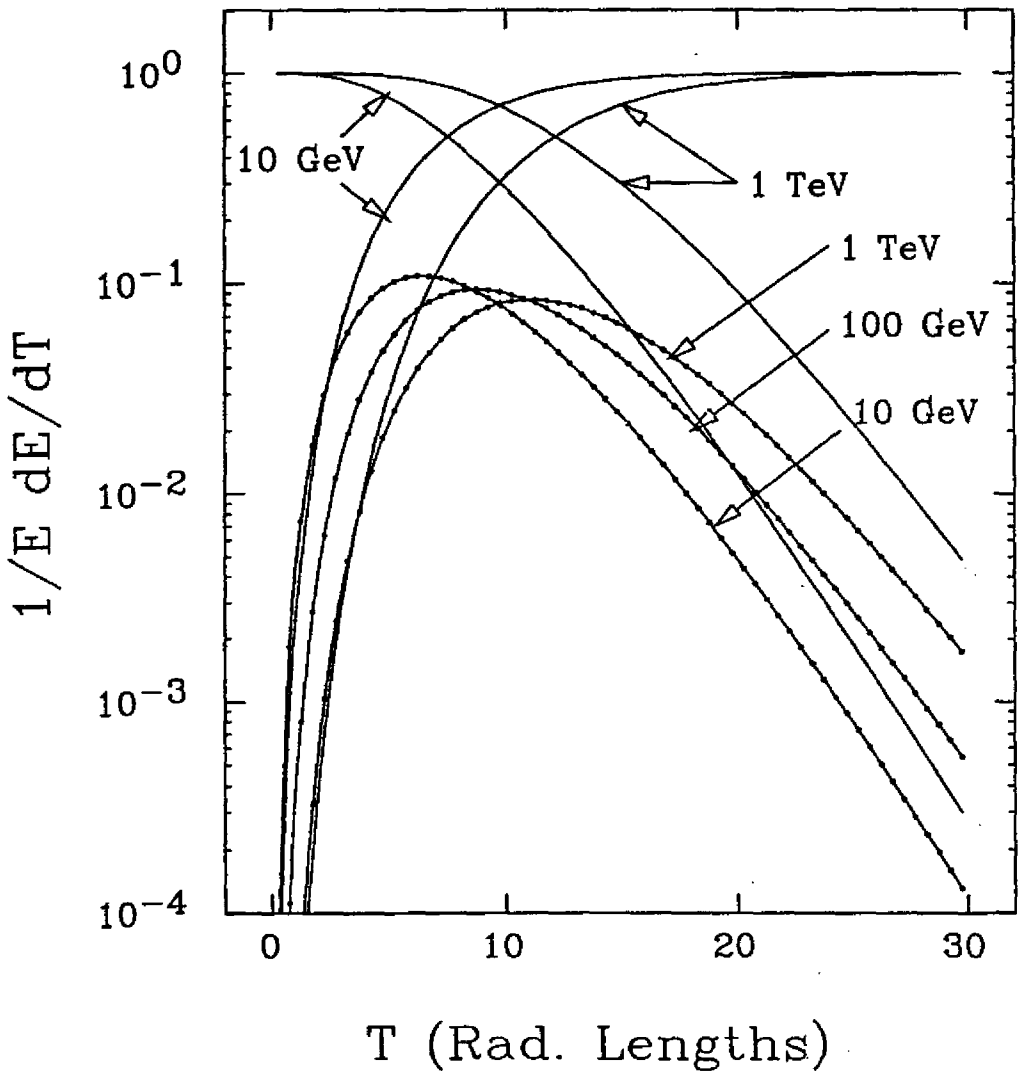

Fig. 2-3 Electromagnetic (EM) shower development and absorption curves. Energy value from 10 GeV to 1 TeV are shown for absorber thicknesses to 30 X_o.

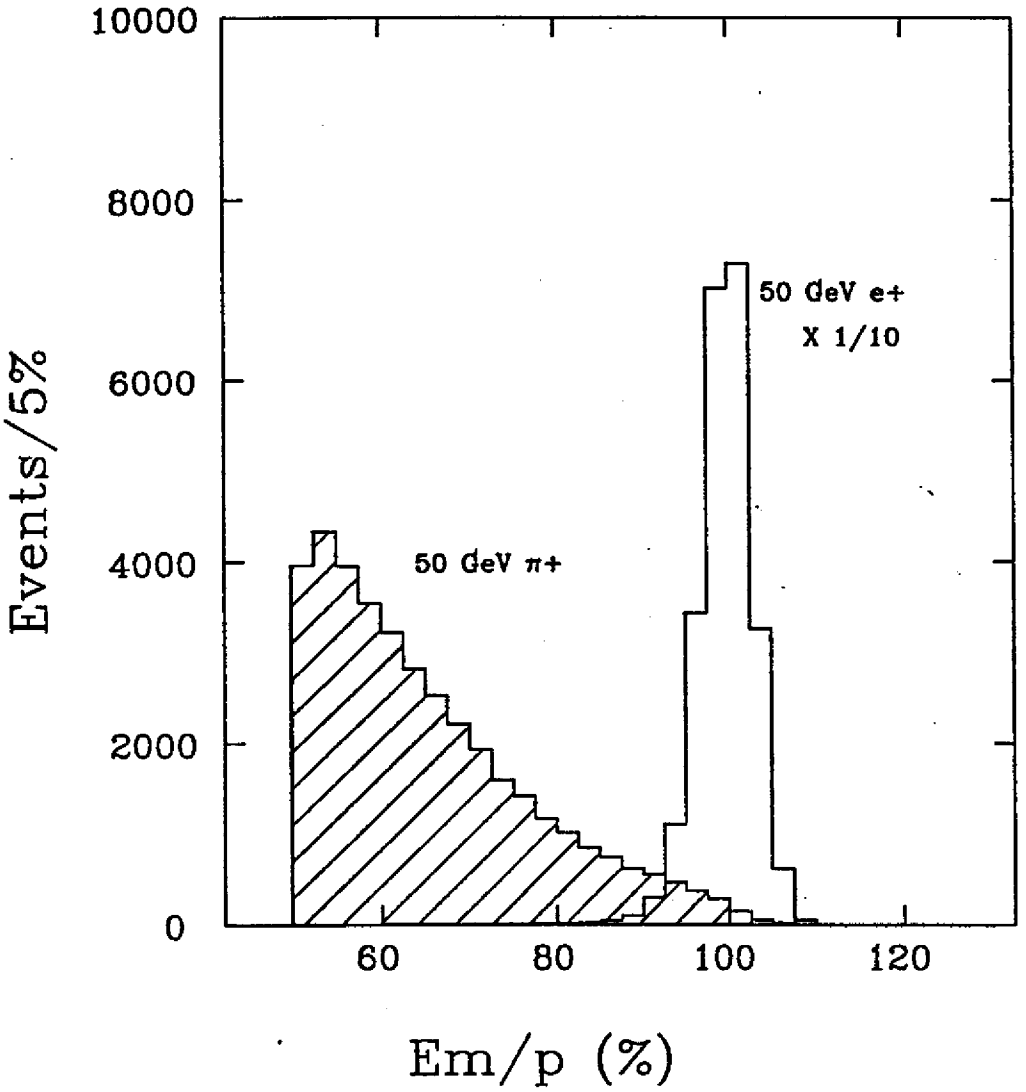

Fig. 2-4 Ratio of electromagnetic calorimeter energy to momentum for 50 GeV electrons and pions from the CDF testbeam.

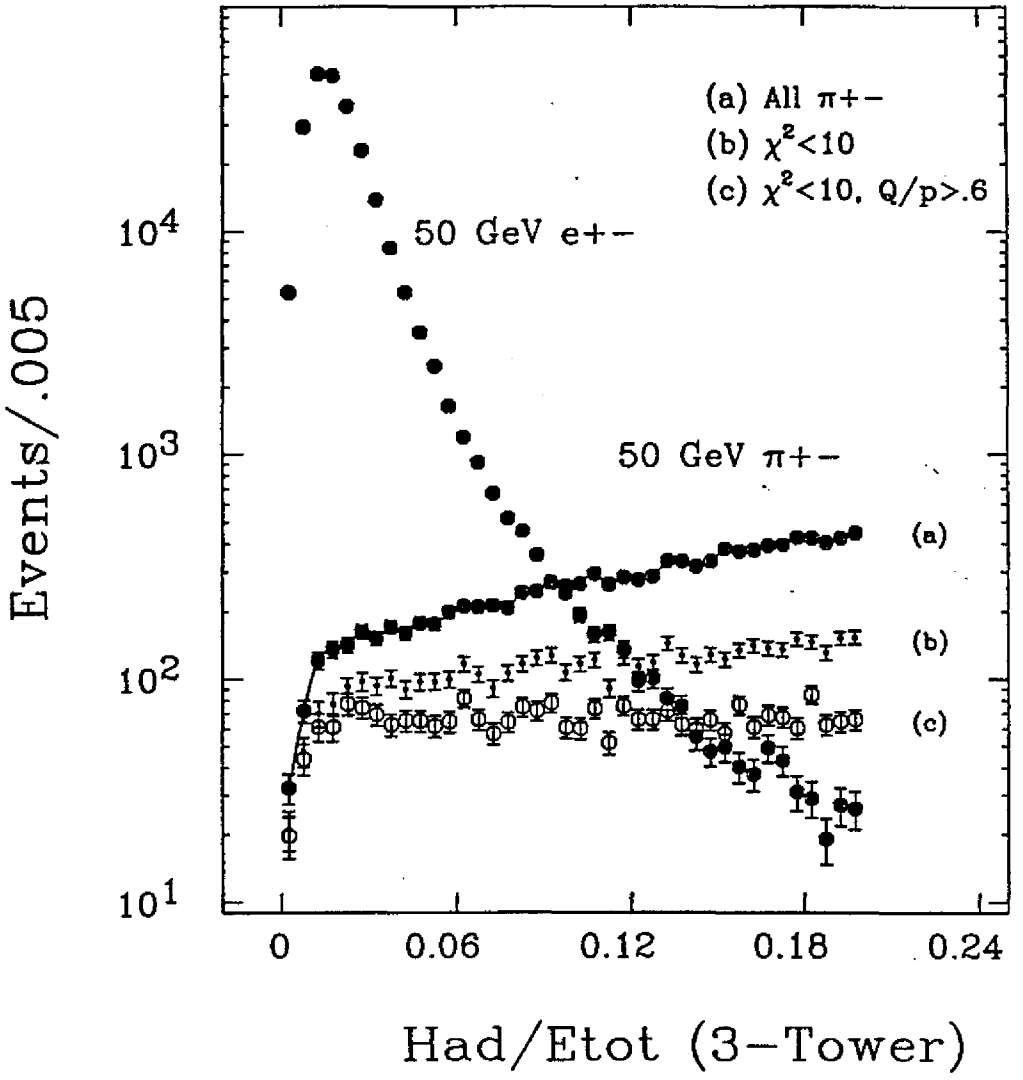

Fig. 2-5 Ratio of hadronic calorimeter to total calorimeter energy for 50 GeV electrons and pions from the CDF testbeam. The three pion data sets are for (a) inclusive pions (no cuts); (b) cuts on the lateral shower shape at 6 X_o; and (c) cuts on the lateral shape and the pulse height at 6 X_o.

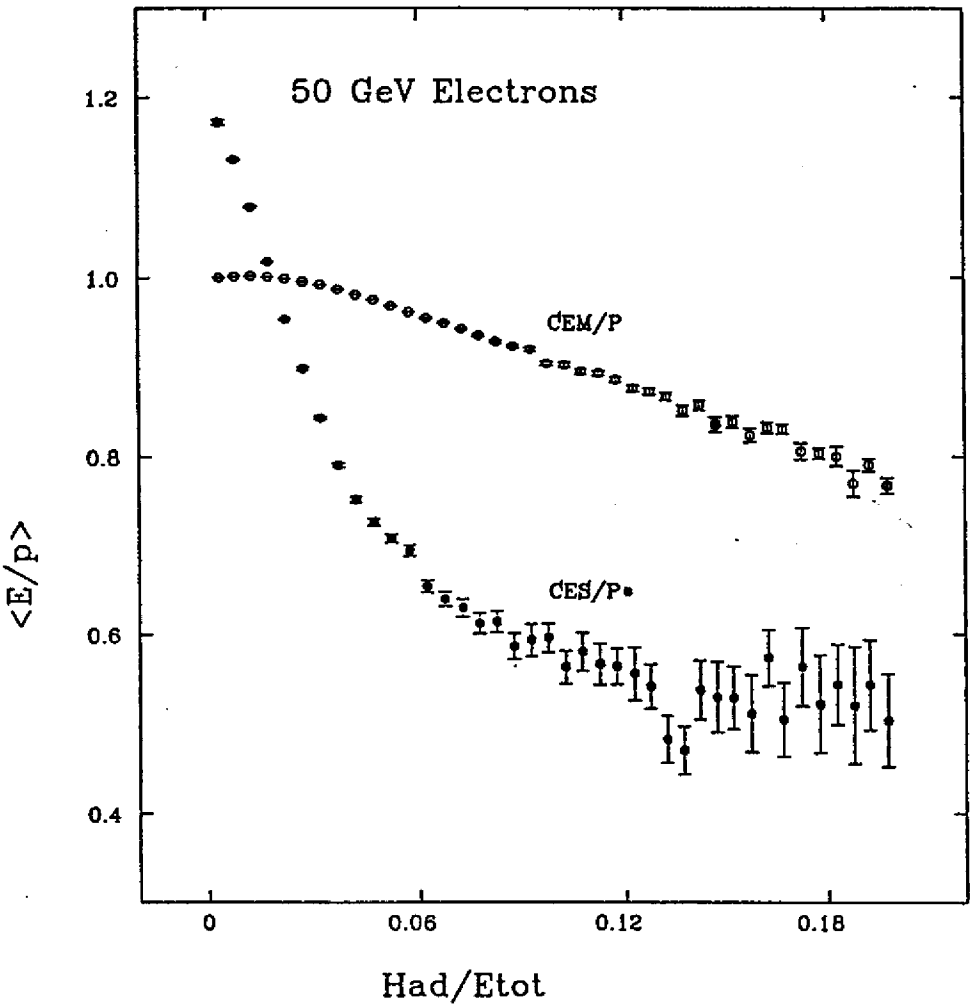

Fig. 2-6 Average electromagnetic energy-to-momentum ratio ("CEM/p") and shower maximum pulse height to momentum ratio ("CES/p*"), from the CDF testbeam, as a function of hadronic leakage fraction, for 50 GeV electrons.

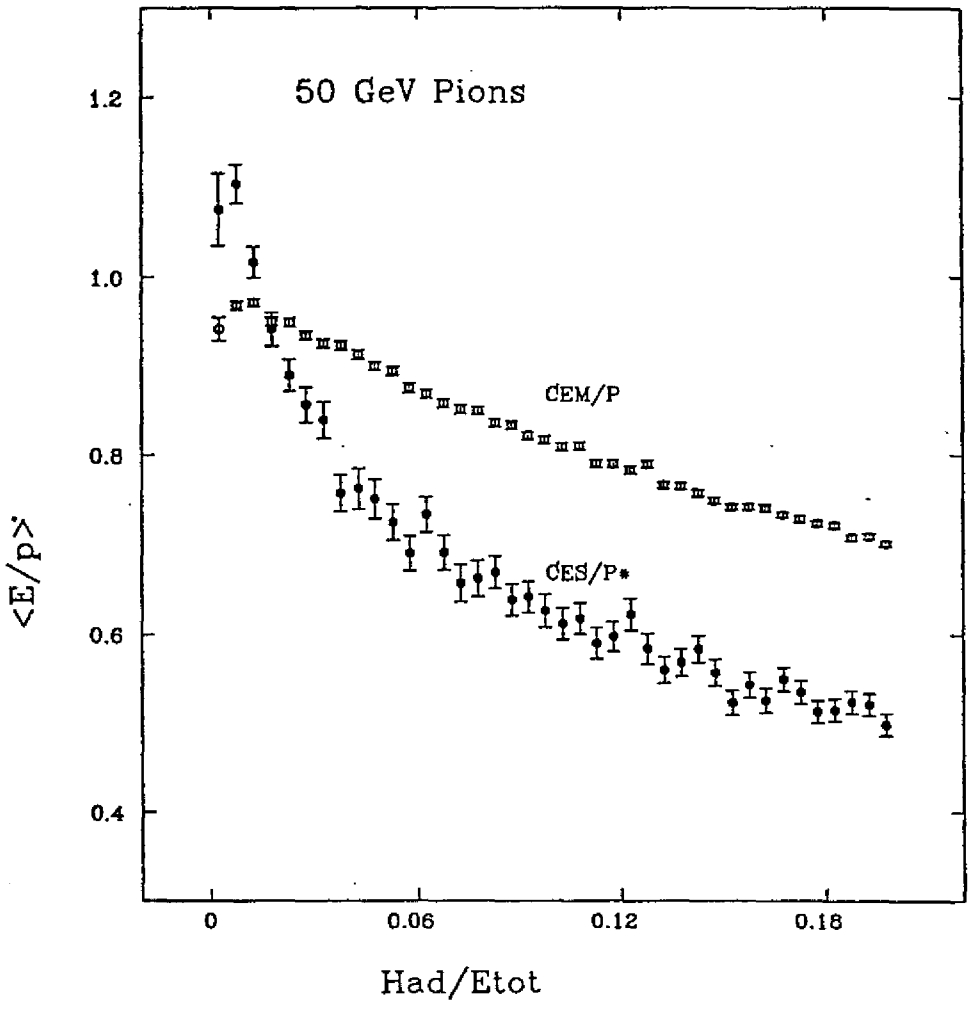

Fig. 2-7 Same as (2-6), but for 50 GeV testbeam pions.

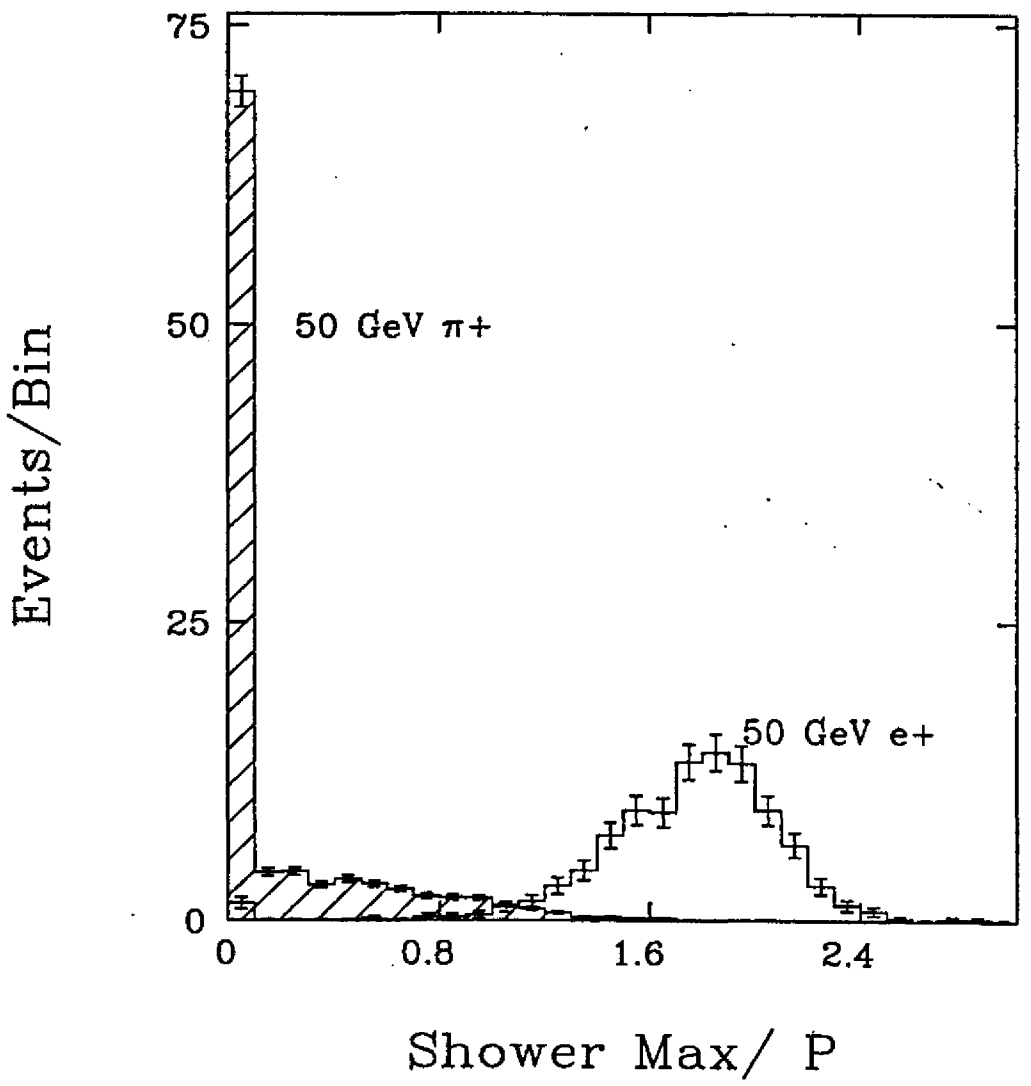

Fig. 2-8 Normalized pulse height distributions for 50 GeV pions and electrons in the shower maximum detector at 6 X_o, from the CDF testbeam.

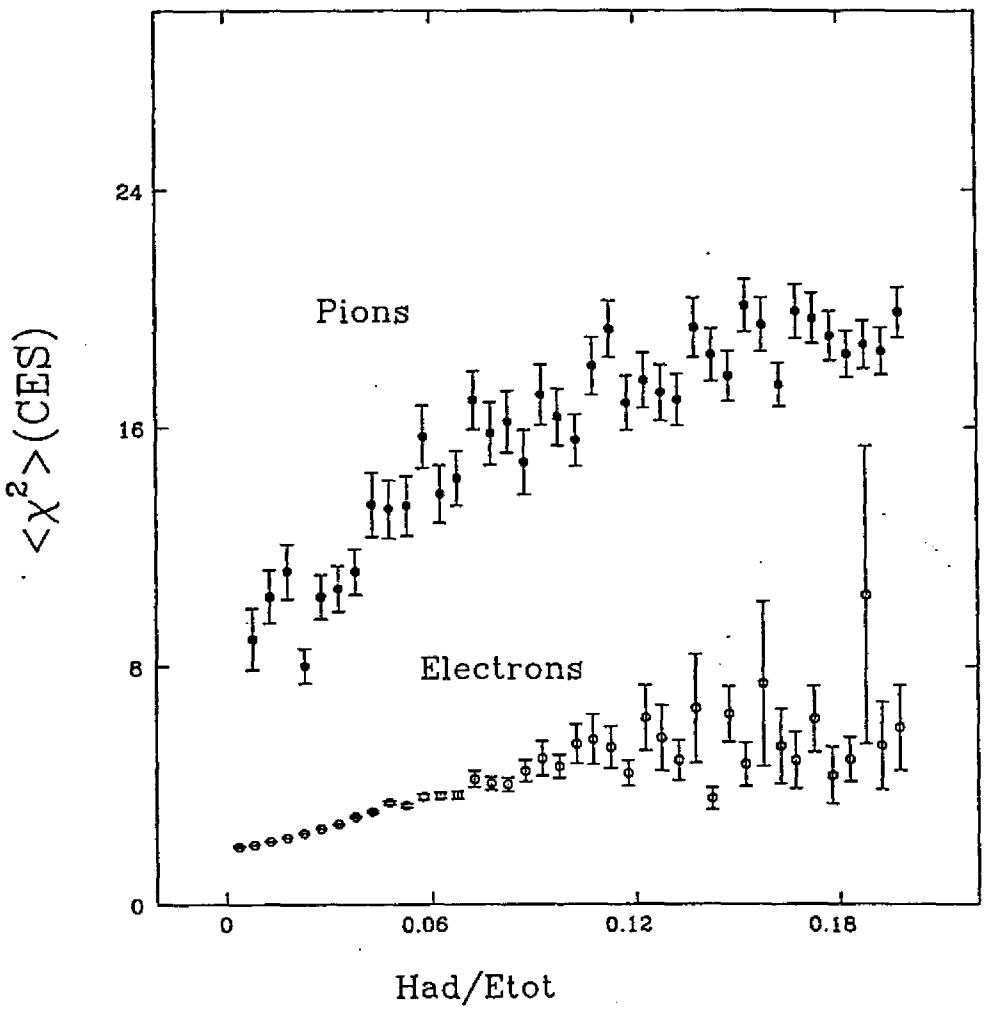

Fig. 2-9 Average shower shape chisquare-probability for 50 GeV electrons and pions from the CDF testbeam, plotted as a function of the hadronic leakage fraction. The chisquare is derived from a fit of the lateral shower shape to the expected electron profile, using the CDF shower-maximum proportional chamber strip detector.

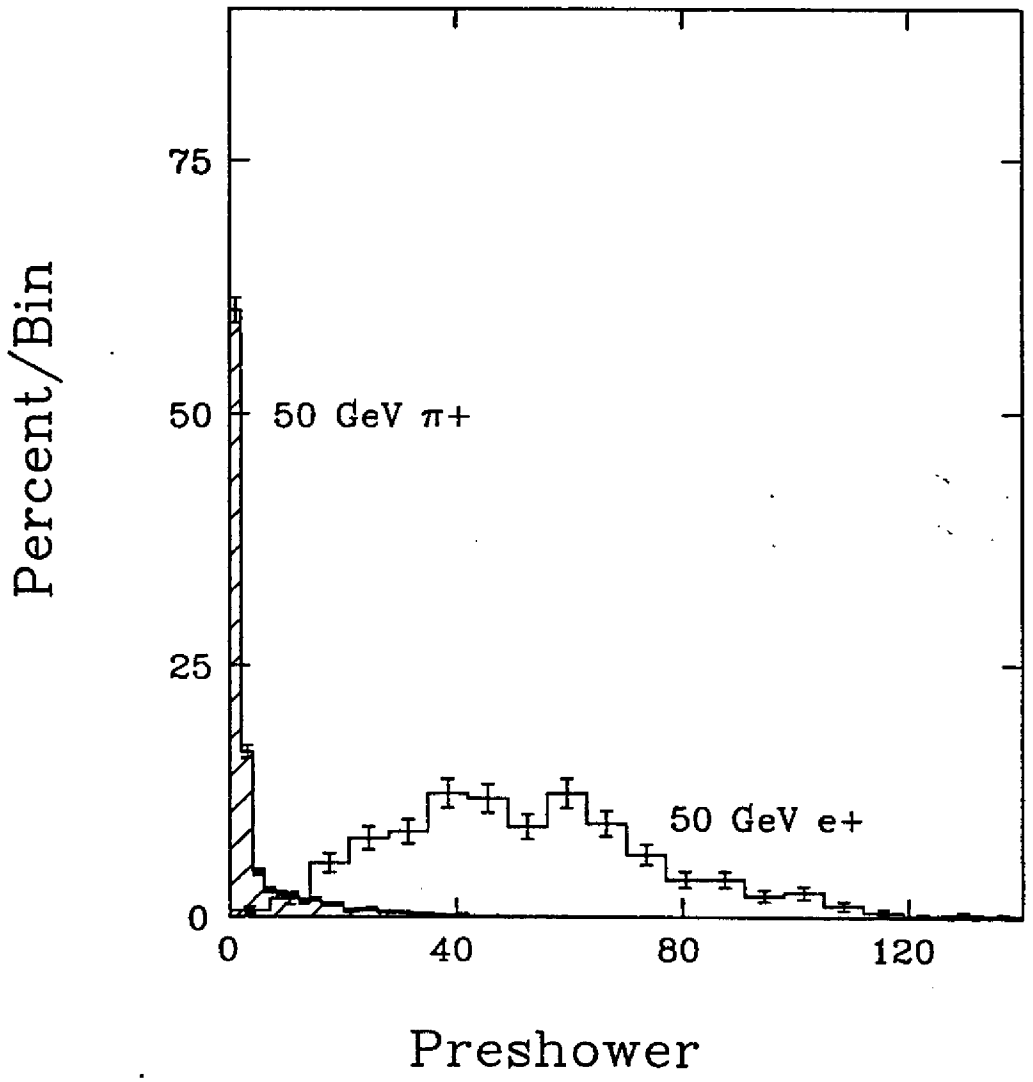

Fig. 2-10 Normalized pulse height distributions for 50 GeV electrons and pions from the CDF testbeam, using a gas-proportional detector at 2 X_o depth.

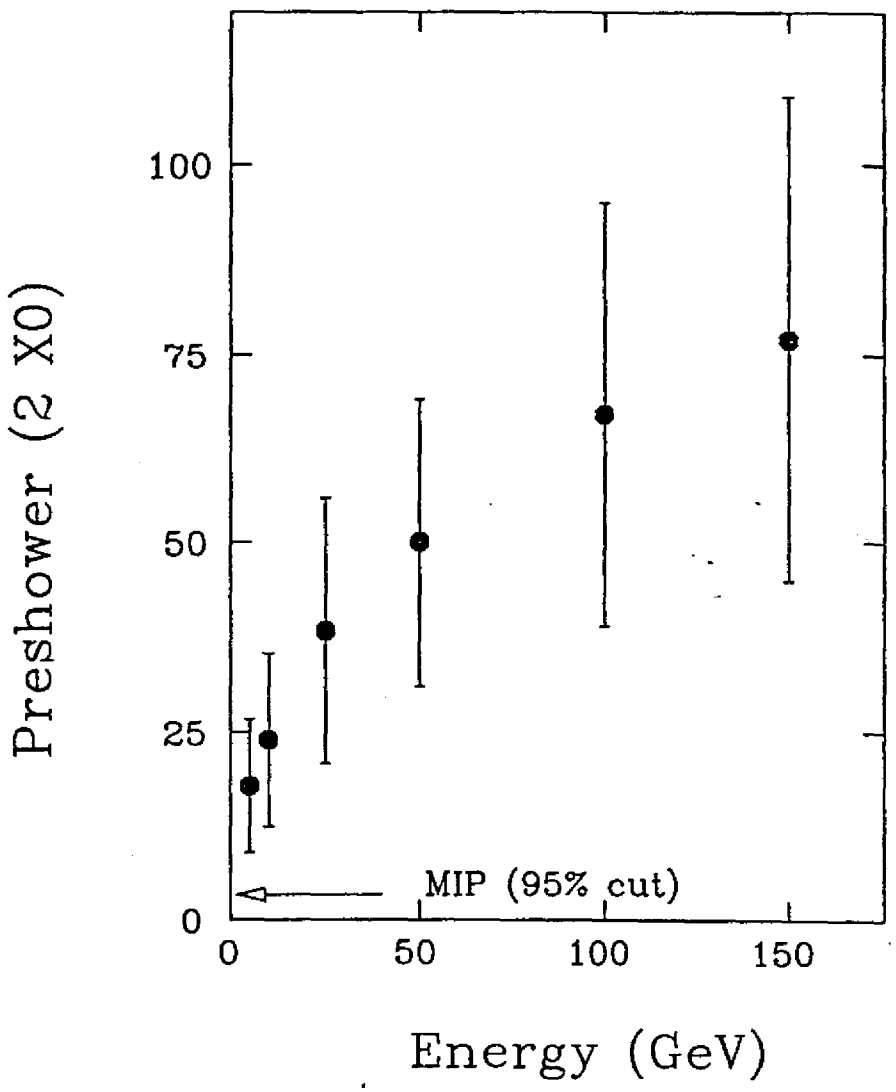

Fig. 2-11 Average preshower detector pulse height as a function of electron energy, from the CDF testbeam. The error bars indicate the rms width of the distributions.

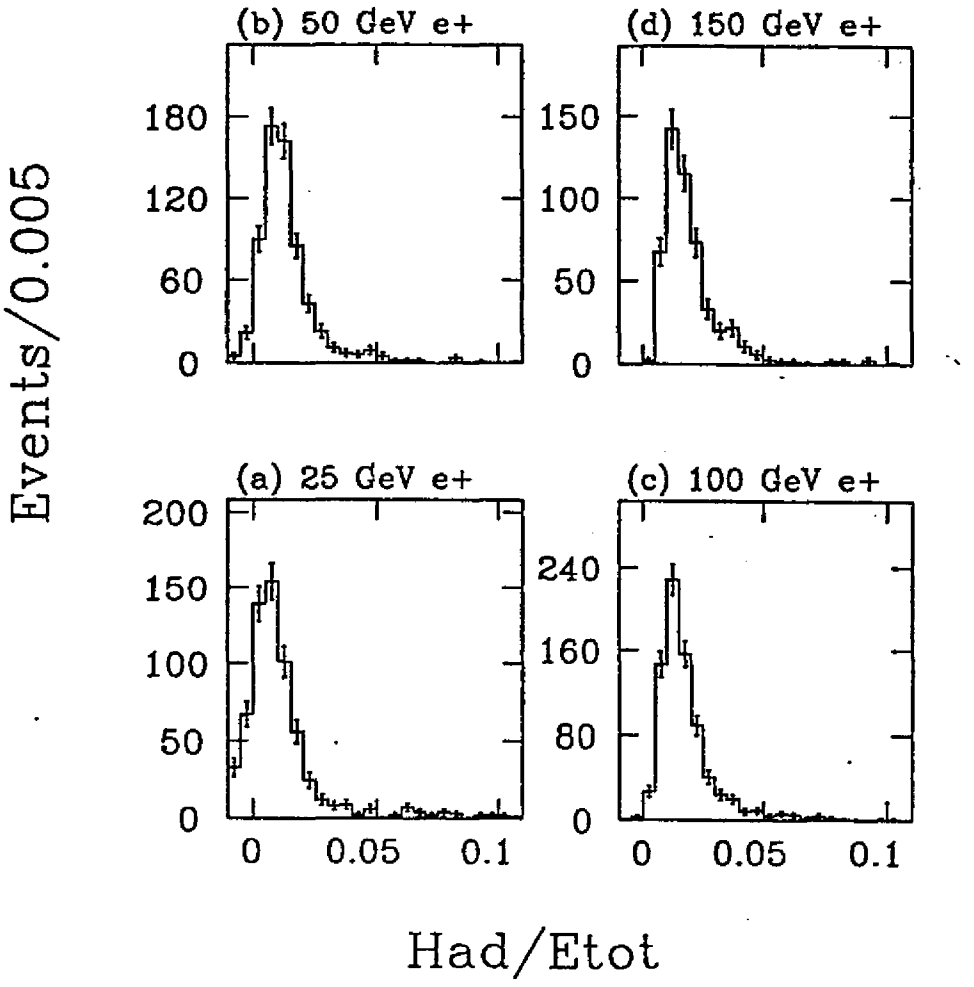

Fig. 2-12 Hadronic leakage distributions for CDF testbeam electrons over the range 25 to 150 GeV. Additional radiator was placed in front of the calorimeter for these tests, to give a total depth of 19.5 X_o for the electromagnetic calorimeter.

APPENDIX A

Barrel and Endcap Unit Cell Parameters and Tile Counts

The chosen parameters for the barrel and endcap calorimeters are given in some detail in the Tables and Figures included here. The numbers of tiles in each tower are explicitly noted, the geometrical properties of each tower and the materials constituting each type of unit cell are also noted in some detail. The total thickness of each EM and HAC tower in radiation units and nuclear absorption units is also given.

To visualize the tile counts in the towers and their absorber thicknesses in easily presented form, the Figures are given based on the numerical Tables. The barrel thickness in absorption lengths is shown for each tower at 90° to the beam (normal to the cell plates) and in absorption lengths along the hadron path from the interaction point (projected thickness).

Numerical values for radiation lengths and hadron absorption lengths and taken from the Review of Particle Properties issued by the Particle Data Group (1990).

	B	C	D	E	F	G	H	I	J	K	L	M	N	
1	...sion: April 11, 1991					'Watermelon'	Calorimeter	Details						
2	'Tower Specs'					Barrel	Calorimeter					EM Pb Plate (cm)=		0.55
3	Rmin (cm) =		210.00		No. Phi Segments =		128	per half barrel				EM cell (cm)=		1.00
4	Zend (cm) =		413.44			delta Phi =	0.049	all Scin. Plate (cm) =			0.25	SM Plates(cm)=		0.90
5	theta end (rad, deg) =		0.47	26.93		delta eta =	0.051	HAC1 Pb Plate(cm)=			1.55	HAC1 cell(cm)=		2.00
6	slope end (rad, deg) =		0.51	29.35				HAC1 Fe Plate(cm)=			3.55	HAC2 cell(cm)=		4.00
7	Tower	Zmax	theta	sin(theta)	eta	dZ	dR EM	dR HAC1	dR HAC2	Yoke	Rmax	lambda	dPhi	dEta	ln(1/sth)
8	No.	(cm)	max		max	(cm)	(cm)	(cm)	(cm)	(cm)	(cm)	total	(cm)		
9	0	2.10	1.56	1.00	0.01	2.10							10.31	0.051	0.00
10	1	12.75	1.51	1.00	0.06	10.65	24.26	69.59	116.00	28.92	448.76	10.30	10.31	0.051	0.00
11	2	23.44	1.46	0.99	0.11	10.69	24.26	69.59	116.00	28.92	448.76	10.34	10.31	0.051	0.01
12	3	34.19	1.41	0.99	0.16	10.75	24.26	69.59	116.00	28.92	448.76	10.42	10.31	0.051	0.01
13	4	45.03	1.36	0.98	0.21	10.84	24.26	69.59	112.00	32.92	448.76	10.29	10.31	0.051	0.02
14	5	55.98	1.31	0.97	0.26	10.95	24.26	69.59	112.00	32.92	448.76	10.42	10.31	0.051	0.03
15	6	67.07	1.26	0.95	0.31	11.10	24.26	69.59	112.00	32.92	448.76	10.57	10.31	0.051	0.05
16	7	78.34	1.21	0.94	0.36	11.27	24.26	69.59	112.00	32.92	448.76	10.74	10.31	0.051	0.07
17	8	89.81	1.17	0.92	0.42	11.47	24.26	65.59	104.00	44.92	448.76	10.28	10.31	0.051	0.08
18	9	101.51	1.12	0.90	0.47	11.70	24.26	65.59	104.00	40.58	444.43	10.49	10.31	0.051	0.10
19	10	113.47	1.08	0.88	0.52	11.96	24.26	65.59	104.00	36.25	440.09	10.74	10.31	0.051	0.13
20	11	125.72	1.03	0.86	0.57	12.25	24.26	65.59	104.00	31.91	435.76	11.01	10.31	0.051	0.15
21	12	138.30	0.99	0.84	0.62	12.58	20.26	61.59	96.00	43.58	431.42	10.41	10.31	0.051	0.18
22	13	151.23	0.95	0.81	0.67	12.93	20.26	61.59	96.00	39.24	427.09	10.71	10.31	0.051	0.21
23	14	164.55	0.91	0.79	0.72	13.32	20.26	61.59	96.00	34.91	422.75	11.04	10.31	0.051	0.24
24	15	178.30	0.87	0.76	0.77	13.74	20.26	57.59	88.00	42.57	418.42	10.59	10.31	0.051	0.27
25	16	192.50	0.83	0.74	0.82	14.20	20.26	57.59	88.00	38.24	414.08	10.95	10.31	0.051	0.30
26	17	207.19	0.79	0.71	0.87	14.70	20.26	57.59	88.00	33.90	409.75	11.34	10.31	0.051	0.34
27	18	222.42	0.76	0.69	0.92	15.23	18.26	53.59	80.00	43.57	405.41	10.76	10.31	0.051	0.38
28	19	238.22	0.72	0.66	0.97	15.80	18.26	53.59	80.00	39.23	401.08	11.17	10.31	0.051	0.41
29	20	254.64	0.69	0.64	1.02	16.41	18.26	53.59	80.00	34.90	396.74	11.61	10.31	0.051	0.45
30	21	271.71	0.66	0.61	1.07	17.07	18.26	49.59	72.00	42.56	392.41	11.07	10.31	0.051	0.49
31	22	289.47	0.63	0.59	1.13	17.77	18.26	49.59	48.00	0.00		9.33	10.31	0.051	0.53
32	23	307.98	0.60	0.56	1.18	18.51	14.26	49.59	32.00	0.00		7.95	10.31	0.051	0.57
33	24	327.29	0.57	0.54	1.23	19.30	14.26	45.59	20.00	0.00		6.75	10.31	0.051	0.62
34	25	347.43	0.54	0.52	1.28	20.14	14.26	45.59	8.00	0.00		5.80	10.31	0.051	0.66
35	26	368.47	0.52	0.50	1.33	21.04	14.26	37.59	0.00	0.00		4.44	10.31	0.051	0.70
36	27	390.45	0.49	0.47	1.38	21.98	14.26	21.59	0.00	0.00		3.06	10.31	0.051	0.75
37	28	413.44	0.47	0.45	1.43	22.99	14.26	9.59	0.00	0.00		1.95	10.31	0.051	0.79
38															
39															
40															

	P	Q	R	S	T	U	V	W	X	Y	Z	AA	AB	AC	AD	AE	AF
1	Version: April 11, 1991								'Watermelon'		Calorimeter		Details			EM unit cell X0 =	0.988
2				SC Coil X0, lambda @ 90 deg =			1.15	0.096			Barrel	Calorimeter				EM unit cell lambda =	0.035
3				EM front Fe plate X0, lambda @ 90 deg =			0.18	0.002								HAC1 unit cell lambda =	0.094
4				EM rear Fe plates X0, lambda @ 90 deg =			1.80	0.024								HAC2 unit cell lambda =	0.215
5							Total partial-or-full, full Towers per FULL Barrel =			7168	5376						
6		Tower Cell Count				Geometrical Props. @ 90 deg				Const. Resol: Props. @ 90 deg				Const. Resol: Props. @ theta			
7	Tower	EM1	EM2	HAC1	HAC2	EM1*	EM2	HAC1	HAC2	EM1*	EM2	HAC1	HAC2	EM1*	EM2	HAC1	HAC2
8	No.	#	#	#	#	X0	X0	lambda	lambda	X0	X0	lambda	lambda	X0	X0	lambda	lambda
9	0																
10	1	7	14	34	29	8.25	13.83	3.21	6.23	8.24	13.81	3.21	6.22	8.25	13.83	3.21	6.23
11	2	7	14	34	29	8.25	13.83	3.21	6.23	8.25	13.83	3.21	6.23	8.30	13.92	3.23	6.27
12	3	7	14	34	29	8.25	13.83	3.21	6.23	8.25	13.83	3.21	6.23	8.36	14.01	3.25	6.31
13	4	7	14	34	28	8.25	13.83	3.21	6.02	8.25	13.83	3.21	6.23	8.44	14.14	3.28	6.37
14	5	7	14	34	28	8.25	13.83	3.21	6.02	8.25	13.82	3.21	6.23	8.53	14.31	3.32	6.44
15	6	7	14	34	28	8.25	13.83	3.21	6.02	8.24	13.82	3.21	6.22	8.65	14.50	3.37	6.53
16	7	7	14	34	28	8.25	13.83	3.21	6.02	8.23	13.80	3.20	6.22	8.79	14.73	3.42	6.64
17	8	7	14	32	26	8.25	13.83	3.02	5.59	8.22	13.79	3.20	6.21	8.94	14.99	3.48	6.75
18	9	7	14	32	26	8.25	13.83	3.02	5.59	8.21	13.76	3.19	6.20	9.12	15.28	3.55	6.89
19	10	7	14	32	26	8.25	13.83	3.02	5.59	8.19	13.73	3.19	6.18	9.31	15.60	3.62	7.03
20	11	7	14	32	26	8.25	13.83	3.02	5.59	8.16	13.69	3.18	6.17	9.51	15.95	3.70	7.19
21	12	5	12	30	24	6.27	11.86	2.84	5.16	8.13	13.63	3.16	6.14	9.74	16.32	3.79	7.35
22	13	5	12	30	24	6.27	11.86	2.84	5.16	8.09	13.57	3.15	6.11	9.97	16.72	3.88	7.53
23	14	5	12	30	24	6.27	11.86	2.84	5.16	8.05	13.49	3.13	6.08	10.23	17.14	3.98	7.72
24	15	5	12	28	22	6.27	11.86	2.65	4.73	8.00	13.41	3.11	6.04	10.49	17.59	4.08	7.92
25	16	5	12	28	22	6.27	11.86	2.65	4.73	7.94	13.31	3.09	5.99	10.77	18.05	4.19	8.13
26	17	5	12	28	22	6.27	11.86	2.65	4.73	7.87	13.19	3.06	5.94	11.05	18.53	4.30	8.35
27	18	5	10	26	20	6.27	9.88	2.46	4.30	7.79	13.07	3.03	5.89	11.35	19.04	4.42	8.57
28	19	5	10	26	20	6.27	9.88	2.46	4.30	7.71	12.93	3.00	5.82	11.66	19.55	4.54	8.81
29	20	5	10	26	20	6.27	9.88	2.46	4.30	7.62	12.78	2.97	5.76	11.98	20.09	4.66	9.05
30	21	5	10	24	18	6.27	9.88	2.27	3.87	7.53	12.62	2.93	5.68	12.31	20.64	4.79	9.30
31	22	5	10	24	12	6.27	9.88	2.27	2.58	7.42	12.45	2.89	5.61	12.64	21.20	4.92	9.55
32	23	5	6	24	8	6.27	5.93	2.27	1.72	7.31	12.26	2.85	5.52	12.98	21.77	5.05	9.81
33	24	5	6	22	5	6.27	5.93	2.09	1.07	7.20	12.07	2.80	5.44	13.33	22.36	5.19	10.07
34	25	5	6	22	2	6.27	5.93	2.09	0.43	7.08	11.87	2.76	5.35	13.69	22.95	5.33	10.34
35	26	5	6	18	0	6.27	5.93	1.71	0.00	6.96	11.66	2.71	5.25	14.05	23.56	5.47	10.61
36	27	5	6	10	0	6.27	5.93	0.96	0.00	6.83	11.45	2.66	5.16	14.42	24.17	5.61	10.89
37	28	5	6	4	0	6.27	5.93	0.40	0.00	6.70	11.23	2.61	5.06	14.79	24.79	5.75	11.17
38	W Tot	189	312	766	546	1813 Plates per barrel sector				*includes the coil, cryostat & front plate of the EM calorimeter							
39	Brl Tot	48	80	196	140	464 K Plates per FULL barrel									Sum for Full barrel		
40	Av Area	142	155	229	338	(cm**2) per tile				Tot Area	685	1240	4499	4725	11150 (M**2)		total

	AG	AH	AI	AJ	AK	AL	AM		AO	AP	AQ	AR	AS	AT	AU
1	rsion: April 11, 1991					'Watermelon' Calorimeter Details									
2						Barrel Calorimeter									
3															
4															
5										Geometrical Props. @					
6		Geometrical Props. @ 90 deg				Geometrical Props. @ theta				90 degrees			theta		
7	Tower	EM	HAC1	HAC2	Total	EM	HAC1	HAC2	Total	EM1*	EM2	Total	EM1*	EM2	Total
8	No.	lambda	lambda	lambda	lambda	lambda	lambda	lambda	lambda	X0	X0	X0	X0	X0	X0
9	0														
10	1	0.84	3.21	6.23	10.28	0.84	3.22	6.24	10.30	8.25	13.83	22.08	8.27	13.86	22.12
11	2	0.84	3.21	6.23	10.28	0.84	3.23	6.27	10.34	8.25	13.83	22.08	8.30	13.92	22.22
12	3	0.84	3.21	6.23	10.28	0.85	3.25	6.31	10.42	8.25	13.83	22.08	8.36	14.01	22.37
13	4	0.84	3.21	6.02	10.07	0.86	3.28	6.15	10.29	8.25	13.83	22.08	8.44	14.15	22.58
14	5	0.84	3.21	6.02	10.07	0.87	3.32	6.23	10.42	8.25	13.83	22.08	8.54	14.32	22.85
15	6	0.84	3.21	6.02	10.07	0.88	3.37	6.32	10.57	8.25	13.83	22.08	8.66	14.52	23.18
16	7	0.84	3.21	6.02	10.07	0.89	3.43	6.42	10.74	8.25	13.83	22.08	8.81	14.76	23.57
17	8	0.84	3.02	5.59	9.45	0.91	3.29	6.08	10.28	8.25	13.83	22.08	8.97	15.04	24.02
18	9	0.84	3.02	5.59	9.45	0.93	3.36	6.20	10.49	8.25	13.83	22.08	9.16	15.36	24.53
19	10	0.84	3.02	5.59	9.45	0.95	3.44	6.35	10.74	8.25	13.83	22.08	9.38	15.72	25.10
20	11	0.84	3.02	5.59	9.45	0.98	3.52	6.51	11.01	8.25	13.83	22.08	9.62	16.12	25.74
21	12	0.70	2.84	5.16	8.69	0.83	3.40	6.17	10.41	6.27	11.86	18.13	7.51	14.20	21.71
22	13	0.70	2.84	5.16	8.69	0.86	3.49	6.35	10.71	6.27	11.86	18.13	7.73	14.61	22.34
23	14	0.70	2.84	5.16	8.69	0.89	3.60	6.55	11.04	6.27	11.86	18.13	7.97	15.06	23.03
24	15	0.70	2.65	4.73	8.07	0.91	3.47	6.20	10.59	6.27	11.86	18.13	8.23	15.55	23.78
25	16	0.70	2.65	4.73	8.07	0.95	3.59	6.41	10.95	6.27	11.86	18.13	8.51	16.08	24.60
26	17	0.70	2.65	4.73	8.07	0.98	3.72	6.64	11.34	6.27	11.86	18.13	8.81	16.66	25.47
27	18	0.63	2.46	4.30	7.39	0.91	3.58	6.26	10.76	6.27	9.88	16.15	9.14	14.39	23.53
28	19	0.63	2.46	4.30	7.39	0.95	3.72	6.50	11.17	6.27	9.88	16.15	9.49	14.94	24.43
29	20	0.63	2.46	4.30	7.39	0.98	3.87	6.75	11.61	6.27	9.88	16.15	9.86	15.53	25.39
30	21	0.63	2.27	3.87	6.77	1.02	3.72	6.32	11.07	6.27	9.88	16.15	10.26	16.16	26.42
31	22	0.63	2.27	2.58	5.48	1.07	3.87	4.39	9.33	6.27	9.88	16.15	10.68	16.83	27.51
32	23	0.49	2.27	1.72	4.48	0.86	4.04	3.05	7.95	6.27	5.93	12.20	11.14	10.52	21.66
33	24	0.49	2.09	1.07	3.65	0.90	3.86	1.99	6.75	6.27	5.93	12.20	11.62	10.98	22.60
34	25	0.49	2.09	0.43	3.00	0.94	4.03	0.83	5.80	6.27	5.93	12.20	12.13	11.46	23.59
35	26	0.49	1.71	0.00	2.20	0.98	3.46	0.00	4.44	6.27	5.93	12.20	12.67	11.97	24.64
36	27	0.49	0.96	0.00	1.45	1.03	2.03	0.00	3.06	6.27	5.93	12.20	13.25	12.52	25.76
37	28	0.49	0.40	0.00	0.88	1.07	0.88	0.00	1.95	6.27	5.93	12.20	13.85	13.09	26.95
38		*includes the coil, cryostat & front plate of the EM calorimeter													
39															
40															

Version: April 11, 1991

'Watermelon' Calorimeter Details

Barrel Calorimeter

Tower No.	Geometrical Props. @ theta					
	EM lambda	HAC1 lambda	HAC2 lambda	EHAC1 lambda	EHAC2 lambda	Total lambda
0						
1	0.84	3.22	6.24	0.00	0.00	10.30
2	0.84	3.23	6.27	0.00	0.00	10.34
3	0.85	3.25	6.31	0.00	0.00	10.42
4	0.86	3.28	6.15	0.00	0.00	10.29
5	0.87	3.32	6.23	0.00	0.00	10.42
6	0.88	3.37	6.32	0.00	0.00	10.57
7	0.89	3.43	6.42	0.00	0.00	10.74
8	0.91	3.29	6.08	0.00	0.00	10.28
9	0.93	3.36	6.20	0.00	0.00	10.49
10	0.95	3.44	6.35	0.00	0.00	10.74
11	0.98	3.52	6.51	0.00	0.00	11.01
12	0.83	3.40	6.17	0.00	0.00	10.41
13	0.86	3.49	6.35	0.00	0.00	10.71
14	0.89	3.60	6.55	0.00	0.00	11.04
15	0.91	3.47	6.20	0.00	0.00	10.59
16	0.95	3.59	6.41	0.00	0.00	10.95
17	0.98	3.72	6.64	0.00	0.00	11.34
18	0.91	3.58	6.26	0.00	0.00	10.76
19	0.95	3.72	6.50	0.00	0.00	11.17
20	0.98	3.87	6.75	0.00	0.00	11.61
21	1.02	3.72	6.32	0.00	0.00	11.07
22	1.07	3.87	4.39	0.01	1.93	11.28
23	0.86	4.04	3.05	0.01	3.87	11.83
24	0.90	3.86	1.99	0.01	5.59	12.35
25	0.94	4.03	0.83	0.01	6.88	12.69
26	0.98	3.46	0.00	0.95	7.31	12.69
27	1.03	2.03	0.00	2.26	7.31	12.62
28	1.07	0.88	0.00	3.39	7.31	12.65

Version: April 11, 1991

'Watermelon' Calorimeter Details

Endcap Calorimeter

Zface (cm) =	420.00	No. Phi Sectors =	32 per endcap	EM Pb Plate (cm)=	1.05
Rmin (cm) =	43.00	Towers per Sector =	45	EM cell (cm)=	1.50
theta end (rad, deg) =	0.10 5.85	delta R (cm) =	10.18	all Scin. Plate (cm) = 0.25	SMD scin(cm)= 0.90
				HAC1 Pb Plate(cm)= 1.55	HAC1 cell(cm)= 2.00
				HAC1 Fe Plate(cm)= 3.55	HAC2 cell(cm)= 4.00

Ring No.	No. Towers	theta min	cos(theta)	eta min	dR (cm)	dZ EM (cm)	dZ HAC1 (cm)	dZ HAC2 (cm)	Fe Cap (cm)	Zmax (cm)	lambda total	Rmin (cm)	dEta	ln(1/sth)
1	1	0.10	0.99	2.97	10.18	19.76	69.59	148.00	48.92	706.26	12.17	43.00	0.211	2.28
2	1	0.13	0.99	2.76	10.18	19.76	69.59	148.00	48.92	706.26	12.21	53.18	0.173	2.07
3	1	0.15	0.99	2.59	10.18	19.76	69.59	148.00	48.92	706.26	12.25	63.35	0.147	1.90
4	2	0.17	0.99	2.44	10.18	19.76	69.59	148.00	48.92	706.26	12.30	73.53	0.127	1.76
5	2	0.20	0.98	2.32	10.18	19.76	69.59	148.00	48.92	706.26	12.35	83.70	0.112	1.63
6	2	0.22	0.98	2.20	10.18	19.76	69.59	148.00	48.92	706.26	12.41	93.88	0.1	1.52
7	2	0.24	0.97	2.10	10.18	19.76	69.59	148.00	48.92	706.26	12.48	104.05	0.09	1.43
8	2	0.27	0.96	2.01	10.18	19.76	69.59	148.00	48.92	706.26	12.55	114.23	0.082	1.34
9	4	0.29	0.96	1.93	10.18	19.76	69.59	148.00	48.92	706.26	12.63	124.40	0.075	1.26
10	4	0.31	0.95	1.86	10.18	19.76	69.59	148.00	48.92	706.26	12.72	134.58	0.069	1.19
11	4	0.33	0.95	1.79	10.18	19.76	69.59	148.00	48.92	706.26	12.81	144.75	0.064	1.12
12	4	0.35	0.94	1.72	10.18	19.76	69.59	148.00	48.92	706.26	12.91	154.93	0.059	1.06
13	4	0.37	0.93	1.66	10.18	19.76	69.59	148.00	48.92	706.26	13.01	165.10	0.055	1.01
14	4	0.40	0.92	1.61	10.18	19.76	69.59	148.00	48.92	706.26	13.12	175.28	0.052	0.95
15	4	0.42	0.91	1.56	10.18	19.76	69.59	148.00	48.92	706.26	13.24	185.45	0.049	0.91
16	4	0.44	0.91	1.51	10.18	19.76	69.59	148.00	48.92	706.26	13.36	195.63	0.05	0.86
17	4	0.46	0.90	1.46	8.30	0.00	69.59	148.00		706.26	12.71	216.50	0.034	0.82
18	4	0.47	0.89	1.42	14.75	0.00	73.59	136.00		706.26	12.29	224.80	0.056	0.79
19	4	0.50	0.88	1.37	16.03	0.00	49.59	136.00		706.26	11.18	239.54	0.056	0.74
20	4	0.53	0.86	1.31	17.49	0.00	21.59	136.00		706.26	9.84	255.58	0.057	0.69
21	4	0.56	0.85	1.25	19.15	0.00	1.59	128.00		706.26	8.41	273.07	0.057	0.64
22	4	0.59	0.83	1.20	21.05	0.00	1.59	104.00		706.26	7.03	292.21	0.057	0.59
23	4	0.62	0.81	1.14	23.24	0.00	1.59	72.00		706.26	5.07	313.26	0.058	0.54
24	4	0.65	0.79	1.08	25.80	0.00	1.59	36.00		706.26	2.77	336.51	0.058	0.50
end		0.69	0.77	1.02								362.31		0.45

	P	Q	R	S	T	U	V	W	X	Y	Z	AA	AB	AC	AD	AE	AF
41	Version: April 11, 1991								'Watermelon' Calorimeter Details							EM unit cell X0 =	1.881
42	20 cm polyeth X0, lambda @ 90 deg =						0.42	0.239		Endcap Calorimeter						EM unit cell lambda =	0.064
43	EM front Fe plate X0, lambda @ 90 deg =						0.18	0.002								HAC1 unit cell lambda =	0.094
44	EM rear Fe plates X0, lambda @ 90 deg =						1.80	0.024								HAC2 unit cell lambda =	0.215
45	Total Full/Partial Towers per Endcap = 1312 1024																
46		Tower Cell Count				Geometrical Props. @ 90 deg				Const. Resol: Props. @ 90 deg				Const. Resol: Props. @ theta			
47	Ring	EM1	EM2	HAC1	HAC2	EM1	EM2	HAC1	HAC2	EM1*	EM2	HAC1	HAC2	EM1*	EM2	HAC1	HAC2
48	No.	#	#	#	#	X0	X0	lambda	lambda	X0	X0	lambda	lambda	X0	X0	lambda	lambda
49	1	5	6	34	37	10.00	12.19	3.20	7.95	9.95	12.12	3.18	7.91	10.00	12.19	3.20	7.95
50	2	5	6	34	37	10.00	12.19	3.20	7.95	9.95	12.12	3.18	7.91	10.03	12.22	3.21	7.97
51	3	5	6	34	37	10.00	12.19	3.20	7.95	9.95	12.12	3.18	7.91	10.06	12.26	3.22	8.00
52	4	5	6	34	37	10.00	12.19	3.20	7.95	9.95	12.12	3.18	7.91	10.10	12.31	3.23	8.03
53	5	5	6	34	37	10.00	12.19	3.20	7.95	9.95	12.12	3.18	7.91	10.15	12.36	3.24	8.06
54	6	5	6	34	37	10.00	12.19	3.20	7.95	9.95	12.12	3.18	7.91	10.20	12.42	3.26	8.10
55	7	5	6	34	37	10.00	12.19	3.20	7.95	9.95	12.12	3.18	7.91	10.25	12.49	3.28	8.15
56	8	5	6	34	37	10.00	12.19	3.20	7.95	9.95	12.12	3.18	7.91	10.31	12.56	3.30	8.20
57	9	5	6	34	37	10.00	12.19	3.20	7.95	9.95	12.12	3.18	7.91	10.38	12.64	3.32	8.25
58	10	5	6	34	37	10.00	12.19	3.20	7.95	9.95	12.12	3.18	7.91	10.45	12.73	3.34	8.30
59	11	5	6	34	37	10.00	12.19	3.20	7.95	9.95	12.12	3.18	7.91	10.52	12.82	3.37	8.37
60	12	5	6	34	37	10.00	12.19	3.20	7.95	9.95	12.12	3.18	7.91	10.61	12.92	3.39	8.43
61	13	5	6	34	37	10.00	12.19	3.20	7.95	9.95	12.12	3.18	7.91	10.69	13.03	3.42	8.50
62	14	5	6	34	37	10.00	12.19	3.20	7.95	9.95	12.12	3.18	7.91	10.78	13.14	3.45	8.57
63	15	5	6	34	37	10.00	12.19	3.20	7.95	9.95	12.12	3.18	7.91	10.88	13.25	3.48	8.65
64	16	5	6	34	37	10.00	12.19	3.20	7.95	9.95	12.12	3.18	7.91	10.98	13.37	3.51	8.72
65	17	0	0	34	37	0.00	0.90	3.20	7.95	9.95	12.12	3.18	7.91	11.09	13.51	3.55	8.82
66	18	0	0	36	34	0.00	0.90	3.39	7.31	9.95	12.12	3.18	7.91	11.18	13.62	3.57	8.88
67	19	0	0	24	34	0.00	0.90	2.26	7.31	9.95	12.12	3.18	7.91	11.33	13.81	3.62	9.01
68	20	0	0	10	34	0.00	0.90	0.95	7.31	9.95	12.12	3.18	7.91	11.51	14.02	3.68	9.15
69	21	0	0	0	32	0.00	0.90	0.01	6.88	9.95	12.12	3.18	7.91	11.71	14.27	3.75	9.31
70	22	0	0	0	26	0.00	0.90	0.01	5.59	9.95	12.12	3.18	7.91	11.95	14.56	3.82	9.50
71	23	0	0	0	18	0.00	0.90	0.01	3.87	9.95	12.12	3.18	7.91	12.22	14.89	3.91	9.71
72	24	0	0	0	9	0.00	0.90	0.01	1.93	9.95	12.12	3.18	7.91	12.53	15.27	4.01	9.96
73						Sums											
74	Twr Tot	80	96	648	816	1640 plates											
75	Wdg Tot	225	270	1946	2561	5002 plates per endcap sector											
76	EC Tot	7	9	62	82	160 thousand plates per endcap											
77	Av Area	105	110	131	198	(cm**2) per tile											
78	Tot Area	76	95	815	1620	2605 (M**2) of scin. plate per endcap											
79																	

	G	AH	AI	AJ	AK	AL	AM		AO	AP	AQ	AR	AS	AT	AU
41	...rsion: April 11, 1991				'Watermelon' Calorimeter Details										
42					Endcap Calorimeter										
43															
44															
45										Geometrical Props. @					
46		Geometrical Props. @ 90 deg				Geometrical Props. @ theta				90 degrees			theta		
47	Ring	EM	HAC1	HAC2	Total	EM	HAC1	HAC2	Total	EM1*	EM2	Total	EM1*	EM2	Total
48	No.	lambda	lambda	lambda	lambda	lambda	lambda	lambda	lambda	X0	X0	X0	X0	X0	X0
49	1	0.96	3.20	7.95	12.11	0.97	3.22	7.99	12.17	10.00	12.19	22.19	10.05	12.25	22.31
50	2	0.96	3.20	7.95	12.11	0.97	3.22	8.01	12.21	10.00	12.19	22.19	10.08	12.28	22.37
51	3	0.96	3.20	7.95	12.11	0.97	3.24	8.04	12.25	10.00	12.19	22.19	10.12	12.33	22.44
52	4	0.96	3.20	7.95	12.11	0.98	3.25	8.07	12.30	10.00	12.19	22.19	10.15	12.37	22.53
53	5	0.96	3.20	7.95	12.11	0.98	3.26	8.11	12.35	10.00	12.19	22.19	10.20	12.43	22.63
54	6	0.96	3.20	7.95	12.11	0.99	3.28	8.15	12.41	10.00	12.19	22.19	10.25	12.49	22.74
55	7	0.96	3.20	7.95	12.11	0.99	3.30	8.19	12.48	10.00	12.19	22.19	10.30	12.56	22.86
56	8	0.96	3.20	7.95	12.11	1.00	3.32	8.24	12.55	10.00	12.19	22.19	10.37	12.63	23.00
57	9	0.96	3.20	7.95	12.11	1.00	3.34	8.29	12.63	10.00	12.19	22.19	10.43	12.71	23.14
58	10	0.96	3.20	7.95	12.11	1.01	3.36	8.35	12.72	10.00	12.19	22.19	10.50	12.80	23.30
59	11	0.96	3.20	7.95	12.11	1.02	3.38	8.41	12.81	10.00	12.19	22.19	10.58	12.89	23.47
60	12	0.96	3.20	7.95	12.11	1.03	3.41	8.47	12.91	10.00	12.19	22.19	10.66	12.99	23.65
61	13	0.96	3.20	7.95	12.11	1.03	3.44	8.54	13.01	10.00	12.19	22.19	10.75	13.10	23.84
62	14	0.96	3.20	7.95	12.11	1.04	3.47	8.61	13.12	10.00	12.19	22.19	10.84	13.21	24.04
63	15	0.96	3.20	7.95	12.11	1.05	3.50	8.69	13.24	10.00	12.19	22.19	10.93	13.32	24.26
64	16	0.96	3.20	7.95	12.11	1.06	3.53	8.77	13.36	10.00	12.19	22.19	11.03	13.44	24.48
65	17	0.00	3.20	7.95	11.15	0.00	3.57	8.86	12.43	0.00	0.90	0.90	0.00	1.01	1.01
66	18	0.00	3.39	7.31	10.69	0.00	3.80	8.20	12.01	0.00	0.90	0.90	0.00	1.01	1.01
67	19	0.00	2.26	7.31	9.57	0.00	2.58	8.32	10.89	0.00	0.90	0.90	0.00	1.03	1.03
68	20	0.00	0.95	7.31	8.25	0.00	1.10	8.45	9.55	0.00	0.90	0.90	0.00	1.04	1.04
69	21	0.00	0.01	6.88	6.89	0.00	0.01	8.09	8.11	0.00	0.90	0.90	0.00	1.06	1.06
70	22	0.00	0.01	5.59	5.60	0.00	0.01	6.71	6.72	0.00	0.90	0.90	0.00	1.08	1.08
71	23	0.00	0.01	3.87	3.88	0.00	0.01	4.75	4.76	0.00	0.90	0.90	0.00	1.11	1.11
72	24	0.00	0.01	1.93	1.95	0.00	0.02	2.43	2.45	0.00	0.90	0.90	0.00	1.14	1.14
73															
74															
75															
76															
77															
78															
79															

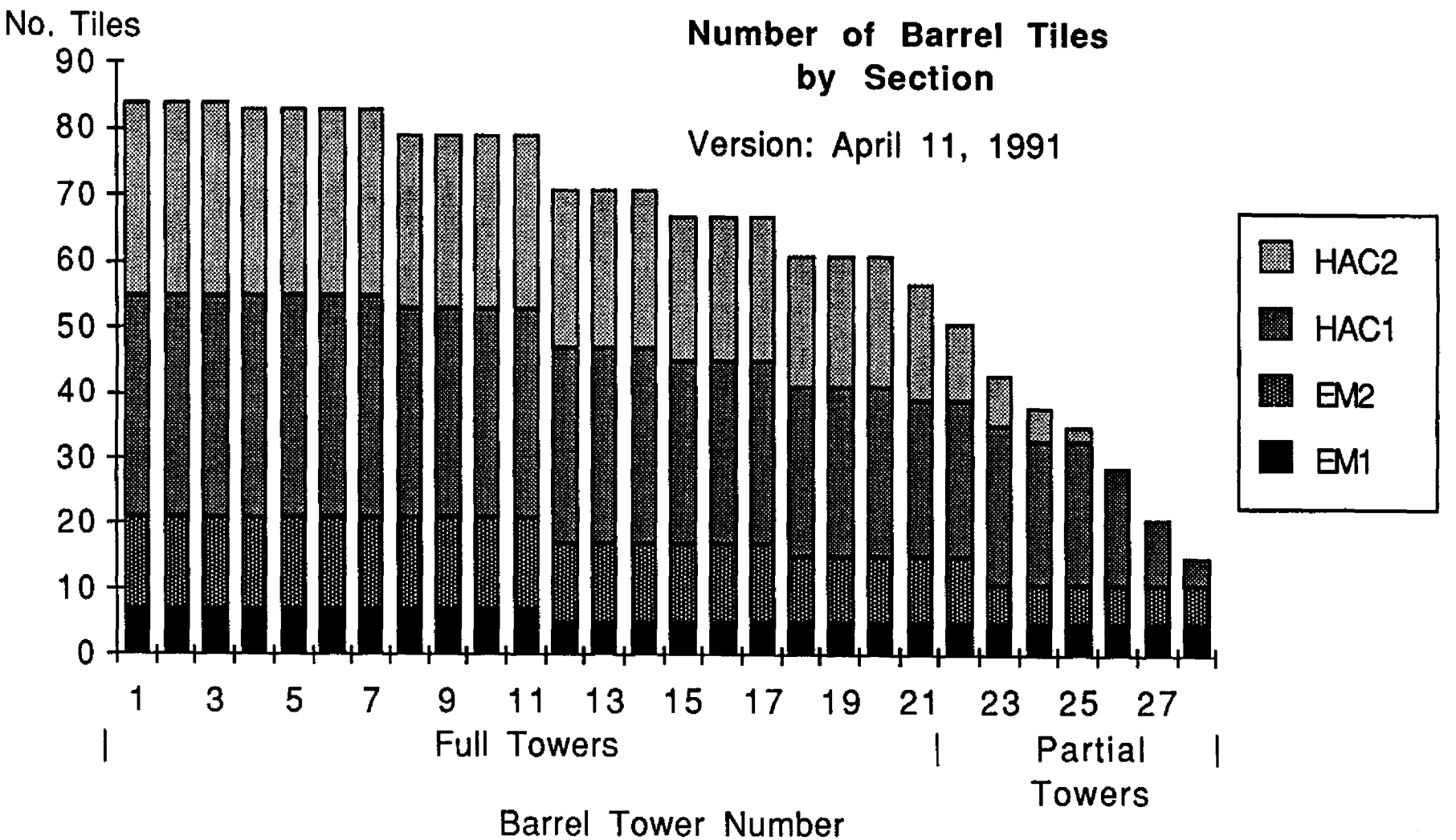
Number of Barrel Tiles
by Section
Version: April 11, 1991
No. Tiles
90
80
70
60
50
40
30
20
10
0
1
3
5
7
9
11
13
15
17
19
21
23
25
27
Full Towers
Partial
Towers
Barrel Tower Number
HAC2
HAC1
EM2
EM1

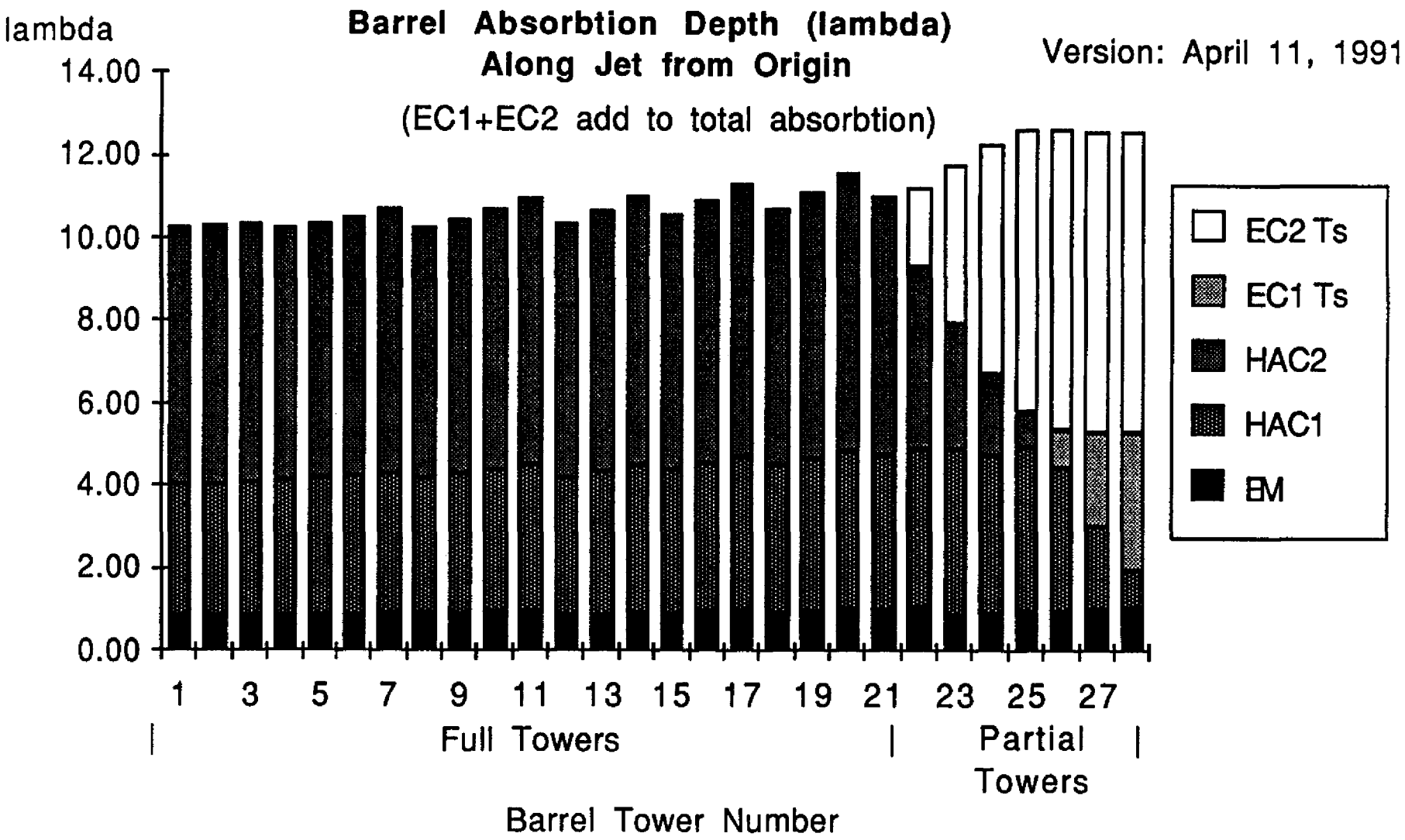
Barrel Absorbtion Depth (lambda)
Along Jet from Origin
(EC1+EC2 add to total absorbtion)
Version: April 11, 1991
lambda
14.00
12.00
10.00
8.00
6.00
4.00
2.00
0.00
1 3 5 7 9 11 13 15 17 19 21 23 25 27
Full Towers
Partial Towers
Barrel Tower Number
EC2 Ts
EC1 Ts
HAC2
HAC1
EM

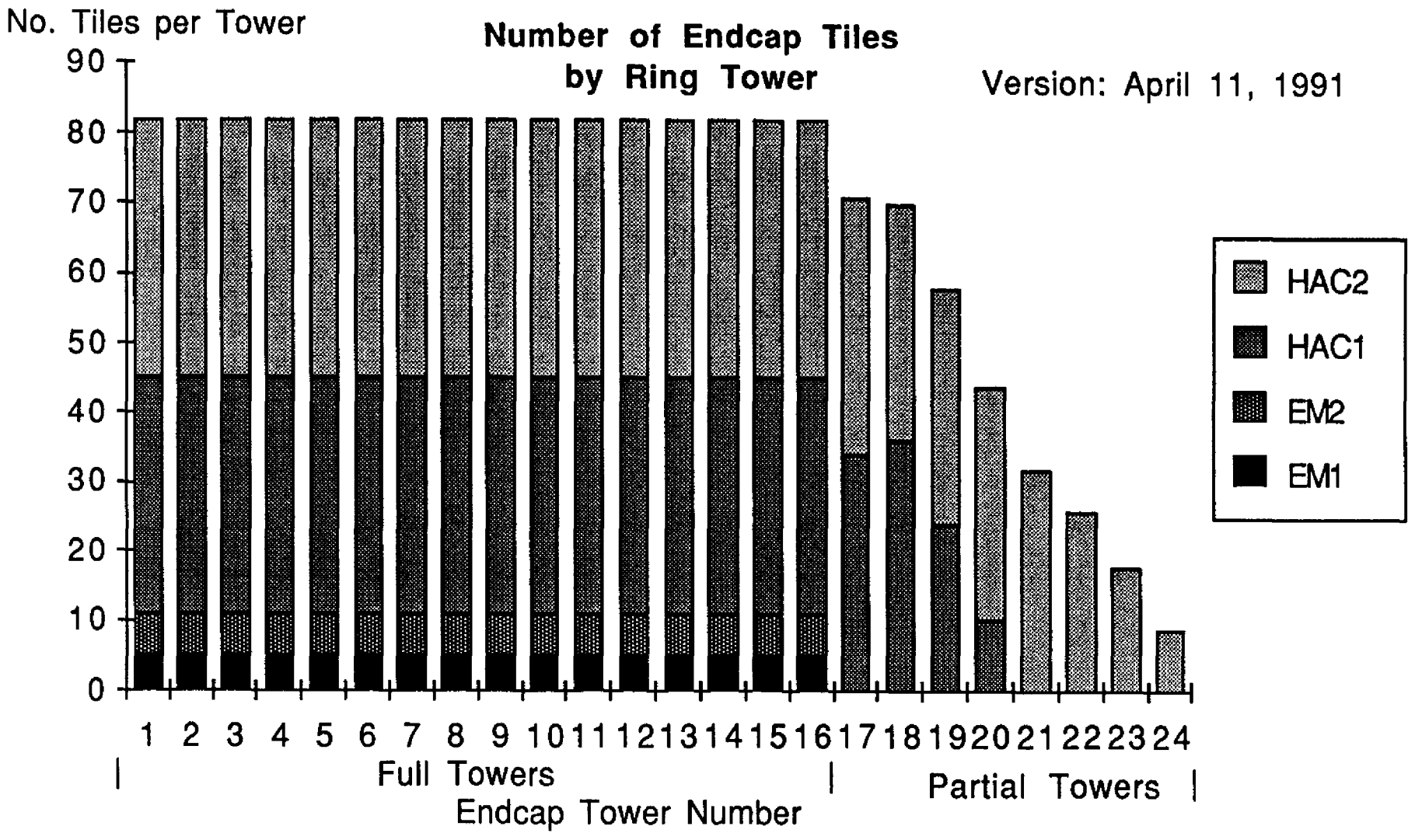
No. Tiles per Tower
Number of Endcap Tiles
by Ring Tower
Version: April 11, 1991
90
80
70
60
50
40
30
20
10
0
HAC2
HAC1
EM2
EM1
1 2 3 4 5 6 7 8 9 10 11 12 13 14 15 16 17 18 19 20 21 22 23 24
Full Towers
Partial Towers
Endcap Tower Number

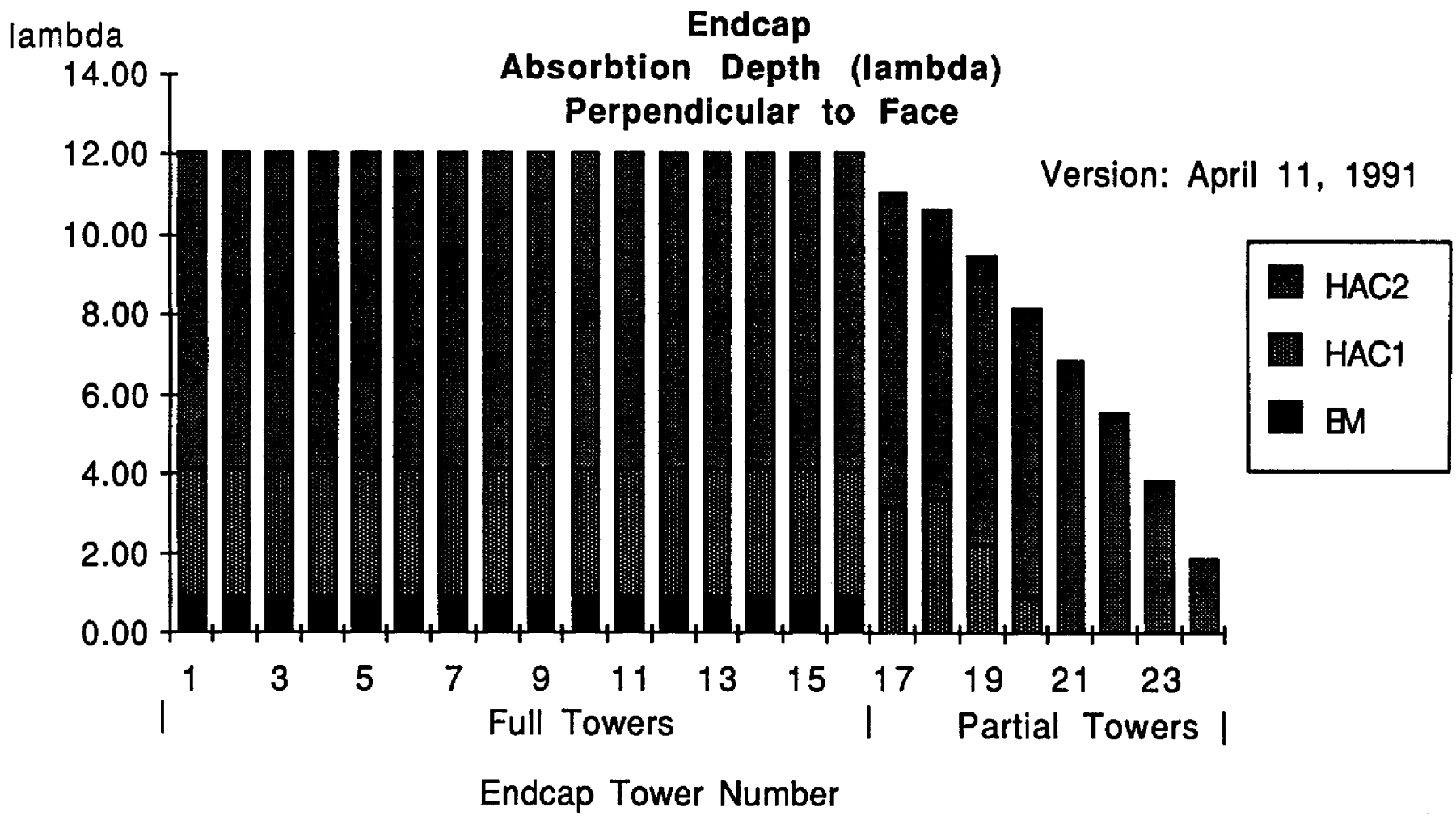
Endcap
Absorbtion Depth (lambda)
Perpendicular to Face
lambda
14.00
12.00
10.00
8.00
6.00
4.00
2.00
0.00
Version: April 11, 1991
HAC2
HAC1
EM
1
3
5
7
9
11
13
15
17
19
21
23
Full Towers
Partial Towers
Endcap Tower Number