SDC-91-00004

0 I
T

SDC
SOLENOIDAL DETECTOR NOTES

COSMIC MUON TRIGGER RATES IN THE SDC CENTRAL MUON SCINTILLATOR

Seong J. Hong

January15, 1991

SDC-91-00004

UM High Energy Physics Memorandum Jan. 15, 1991

TO: SDC collaboration

FROM: Seong J. Hong

SUBJECT: Cosmic muon trigger rates in the SDC central muon scintillator

---

1. Introduction

This note describes the cosmic muon trigger rates in the SDC central muon scintillator. The SDC central muon scintillator configuration used in this note is the same as described in Ref. 1. For convenience, relevant figures in Ref. 1 are reproduced in figures 1 and 2. The SDC detector is assumed to be placed at 100 ft of underground.

The trigger mathematically expressed in Fig. 2 requires at least one combination of a hit at the ith scintillator in layer B and a hit at the ith scintillator in layer C. Definitions of layer B, layer C and ith scintillator are shown in Fig. 2.

A simple Monte Carlo program was written to calculate the cosmic muon trigger rates. Cosmic muons are generated in a plane at the top of layer C (y = 11.000 m). To save computation time, the size of the plane is limited to 60.1×51.8 m^2 in the x and z-directions. A bigger plane gives the same result within the statistical error. Fig. 3 shows a schematic of the scintillator layer C and the plane on which cosmic muons are generated. Generated cosmic muons are sent through the SDC central muon scintillator to check the trigger condition.

2. Calculation

An empirical formula of the depth-intensity relation for the cosmic muons is shown in Ref. 2:

$$I(h,\theta_m) = \frac{174}{h\cos\theta_m + 400}(h + 10\sec\theta_m)^{-1.53}\frac{h+75}{h+50+25\sec\theta_m} \times e^{-8.0\times10^{-6}(h+10\sec\theta_m)} \tag{1}$$

where h is the vertical depth in hg/cm^2 (1 hg = 100 g) and θ_m is the angle relative to the vertical direction. This formula covers a range of muon energies from 1 GeV to 100 TeV and fits the experimental results within about 10 %. The vertical depth consists of the depth of the atmosphere (10.3 hg/cm^2) and the depth of the dirt (80.3 hg/cm^2) where the

density of the dirt is 2.65 g/cm^3. Substituting h with 90.6 hg/cm^2 and integrating Eq. (1) over the solid angle for the upper hemisphere gives 1.2×10^{-3} /cm^2 sec on the plane y = 11.000 m.

At shallow depths, the above formula can be seperated into two parts, the vertical intensity and the angle dependent parts:

$$I(h, \theta_m) = I(h, 0) \cos^n \theta_m \tag{2}$$

where

$$I(h, 0) = \frac{174}{h + 400}(h + 10)^{-1.53} e^{-8.0 \times 10^{-4}} \tag{3}$$

and

$$n = 1.53 + 8.0 \times 10^{-4} h + c. \tag{4}$$

Here c is a small constant arising from muon decay and ionization loss. In this note, we take $c = 0$.

We generate the cosmic muons on the plane y = 11.000 m with flat distributions in x, z and azimuth, but with the $\cos^{1.53} \theta_m$ distribution in the zenith angle, following Eqs. (2) and (4) with $h = 0$. The generated muons are sent through the SDC central muon scintillator to check the trigger condition.

3. Result

Fig. 4 shows the cosmic muon trigger rates per second versus the scattering angle θ with respect to the interaction point. The total trigger rate is 383/sec. The error in the trigger rate is about 10 %, mainly from the error in Eq. (1).

References

1. R. Thun, SDC note 90-00077, Sep. 7, 1990.

2. S. Miyake, *Cosmic Ray Conference*, Vol. 5, Denver 1973, pp. 3638-3655.

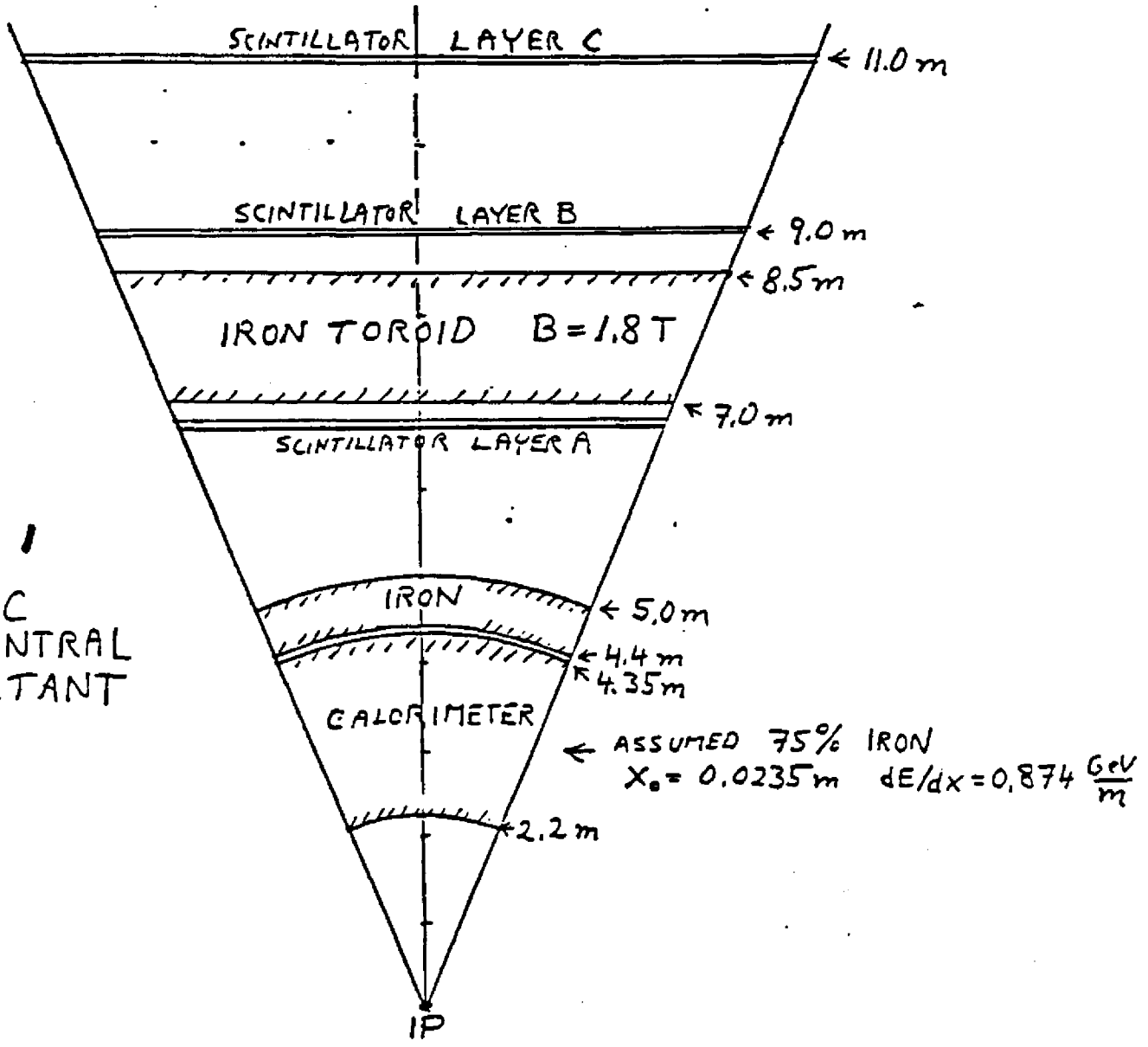

FIG 1

SDC CENTRAL OCTANT

20 JUN 90 6
R. Thun

FIG 2 CENTRAL MUON TRIGGER SCINTILLATORS
(FORWARD LAYOUT IS SIMILAR)

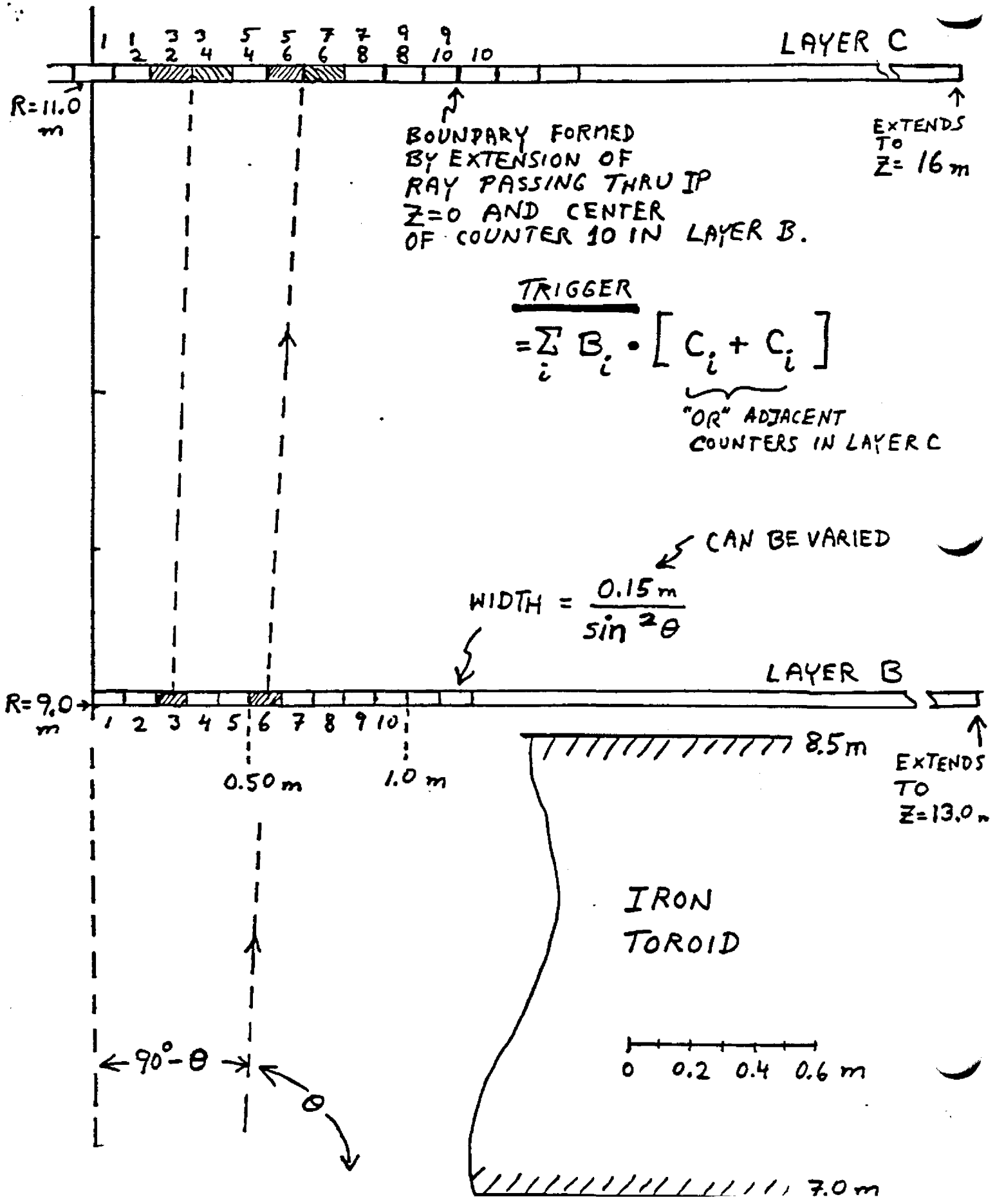

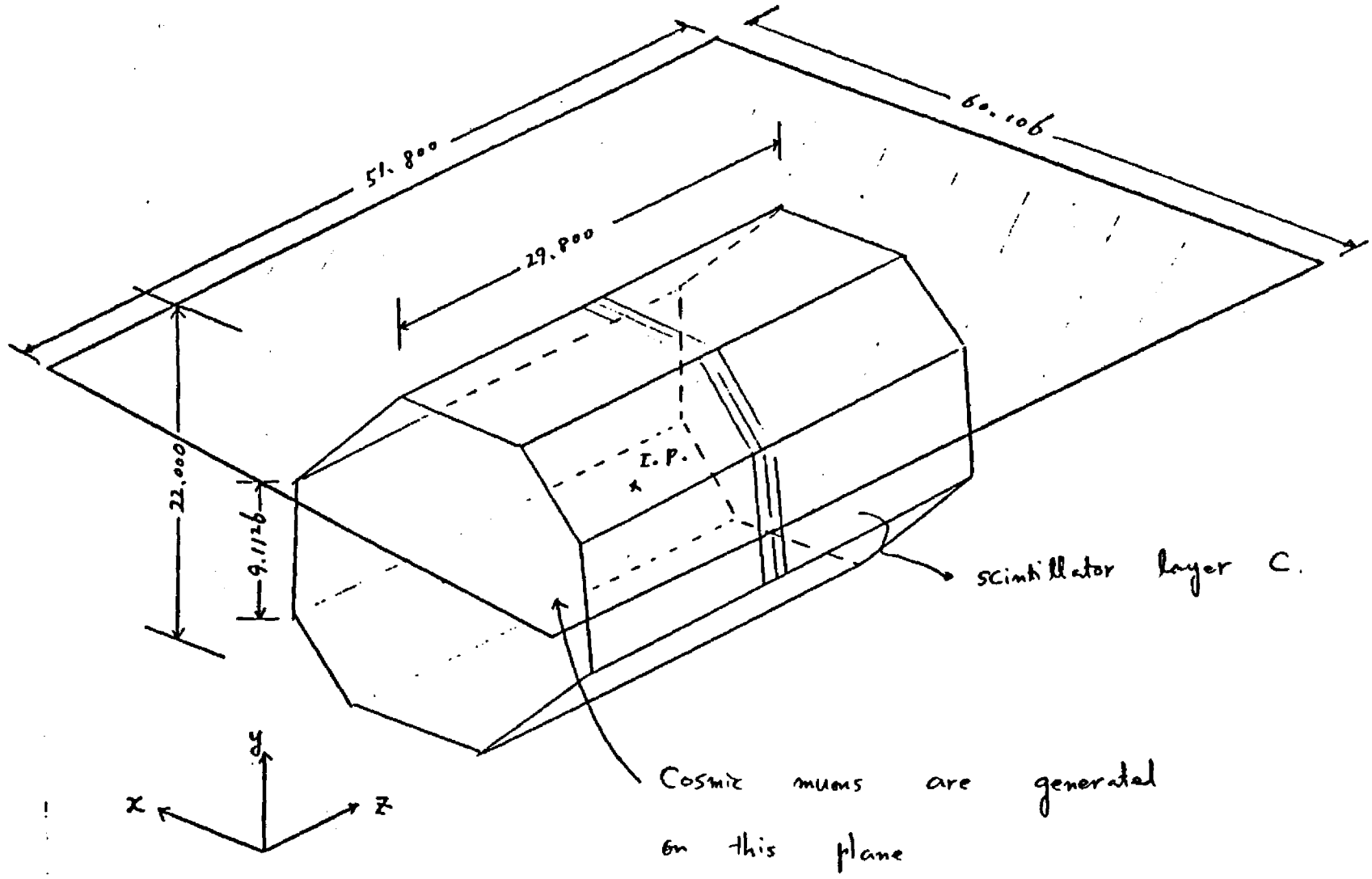

Fig. 3. SDC muon scintillator layer C (Units are in m)

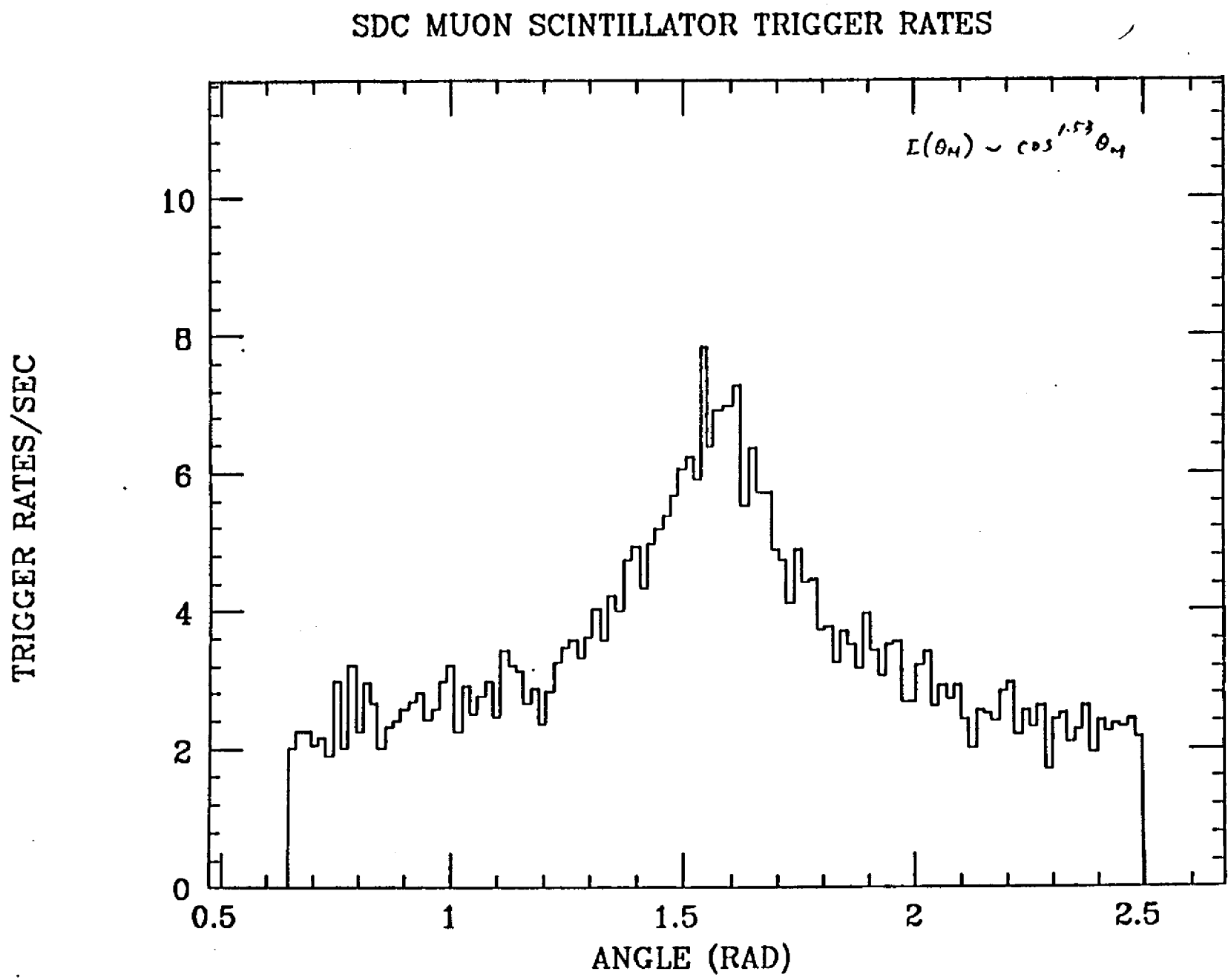

Fig. 4. SDC cosmic muon scintillator trigger rates