Fermilab Library
0 1160 0052523 2

SDC-90-00138

SDC
SOLENOIDAL DETECTOR NOTES

RECENT DEVELOPMENTS IN WIRE CHAMBER TRACKING AT SSC

H. Ogren

November 1990

IUHEE-90-17
SDC-90-00138

Recent Developments in Wire Chamber Tracking at SSC

Harold Ogren
Department of Physics, Indiana University
Bloomington, Indiana 47405

Abstract

All of the major SSC proposed detectors use wire chambers in their tracking systems. The feasibility of wire chambers in an SSC detector has now been established by a number of groups planning detectors at SSC.The major advances during the past year in understanding straw tube drift chambers are presented and several innovations in gaseous wire chambers are discussed.

Introduction

I will try to review the work that has gone on during the past year on wire chambers at SSC. The major part of this will have to do with straw drift chambers, since they are present in all three major detectors proposed at SSC. This talk is divided into two major parts. I will quickly review the wire chambers being planned for SSC detectors and then outline the major areas of research and development for the SSC environment. The R&D section will concentrate on progress in drift cell design, electronics and signal processing, and engineering aspects of the tracking designs.

Wire Chambers at SSC

SDC

The wire chamber tracking system that is being planned for SDC is shown in Fig. 1. It consists of a central tracking system built from straw drift tubes contained in modules as shown in Fig. 2. This design has been worked on primarily by the Wire Tracking Subsystem Group. [1] The central tracker uses 4 mm diameter straws with lengths varying from 4 meters to 2 meters from the outside radius of 1.7 meters to the inside 0.70 meter layers. The total number of modules in the two z halves is 1088 and the total number of straws is about 188,000. As we will see, a good deal of the R&D concerns itself with producing a simple construction and assembly scheme for this large number of straws. The modular approach for the construction will allow each module to be tested with final electronics before insertion into the tracker. The modules also group the straws in precise position and support the wire load of approximately 12 Kg per module. The tracking system in the intermediate region is a radial wire chamber as shown in Fig. 3. The tracking in the intermediate region is being worked on primarily by the groups from the United Kingdom. The present intermediate tracker consists of a radial wire chamber module with a wire "bunch tagger chamber" immediately in front. This tagger has sufficient timing resolution to select the proper crossing time for each event and tag the event for the somewhat slower radial wire chambers. There would be five radial modules required for a precise measurement of the track momentum in the forward direction.

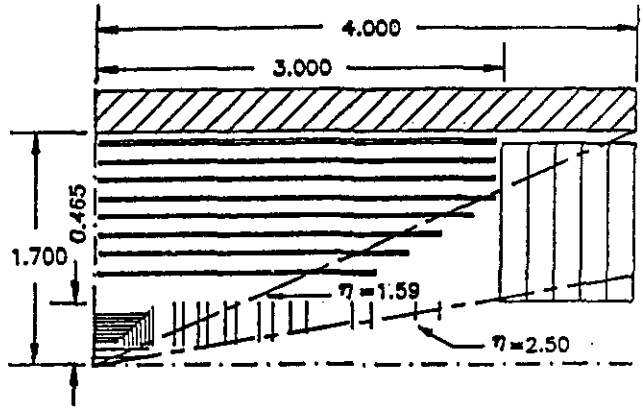

Fig.1. Tracking system for the SDC detector. The straw chamber superlayers surround the silicon system and radial wire chambers are used in the intermediate angle region.

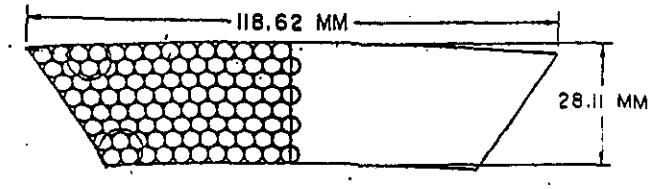

Fig.2. Straw module holding 196 straws. The module walls are constructed from a 250 μ carbon fiber composite.

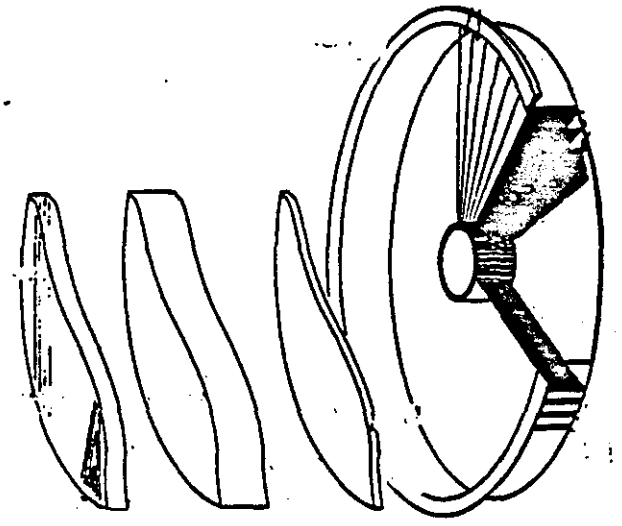

Fig. 3. An exploded view of the radial wire chamber with a bunch tagger and a transition radiation section in front.

Work is also being done on a "Hybrid" detector, consisting of axial straw superlayers and scintillating fiber stereo layers. This has been pursued in some detail by the Hybrid Tracking Subsystem Group.[2] The Hybrid tracker is shown in Fig. 4. The straw layers are glued to a precision cylinder, supported from each end by a conical support. Stereo scintillating fibers are attached to a separate support cylinder on the outer 2 or 3 superlayers. The tracker would use 4 mm straws and 750 micron scintillating fibers.

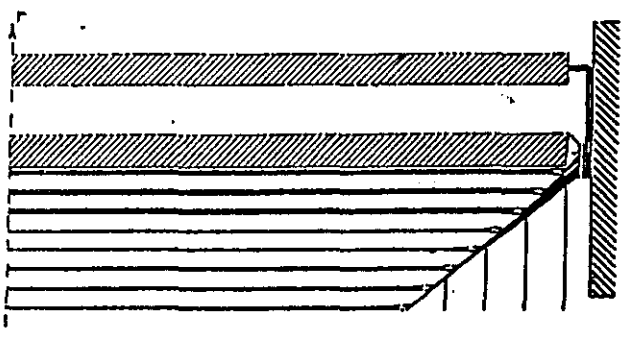

Fig. 4. Superlayer structure for the Hybrid Chamber.

EMPACT

The EMPACT tracker is shown in Fig. 5. As shown in the detailed close-up, straw chambers are used for tracking and transition radiation detectors. These drift tubes are arranged in modules that span a small delta phi, delta z region. There are a total of 385K readout channels for this straw tracker. Although TDCs will not be used for each channel, the pulse height will be digitized for electron id. This wire tracking and electron id work is being pursued by Boston University and Brookhaven National Laboratory.

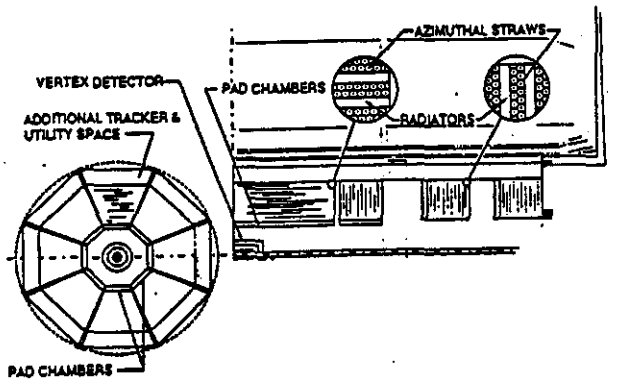

Fig. 5. End and side views of the EMPACT detector. The TRD chambers use straw tubes.

LSTAR

The central wire and scintillating fiber tracker for the LSTAR detector can be seen in Fig. 6. The straw tube chamber fills the region from a radius of 40 cm out to 75 cm and is about 2.8 meters long. The straw tracking system has about 75K channels with TDCs on all wires. As in the Hybrid system, the stereo tracking is done with scintillating fibers. The groups working on the straw chambers are from Boston University, New Mexico University, Indiana University and Los Alamos National Laboratory.

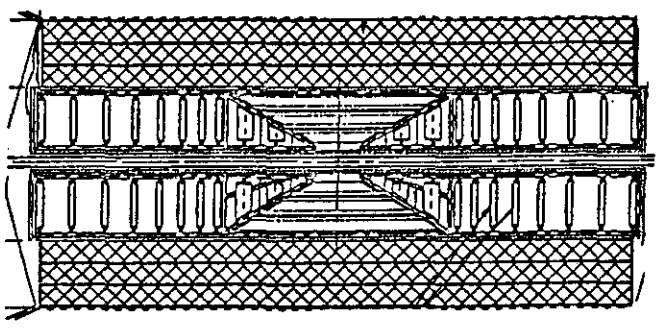

Fig. 6. The tracker for the LSTAR detector. The outer straw and scintillating fiber modules surround a silicon system.

Major Areas of R&D for the SSC Environment

Drift Cell Research

One of the central concerns in tracking at the SSC with straw chambers is shown in Fig. 7. This plot shows the occupancy, hit rate, and current for a straw drift cell in the SDC detector as a function of the radius. The cells were assumed to be half the length of the detector. The calculation was was carried out at KEK[3] and used a PYTHIA particle generator, and GEANT for detector simulation. All known materials were included in the model, and looping tracks in the magnetic field were used. We see that we can expect occupancies near 16% at the inner radius, and currents of up to .6 μ amps. Similar calculations have been carried out by other groups[4] and are in agreement with these basic numbers.

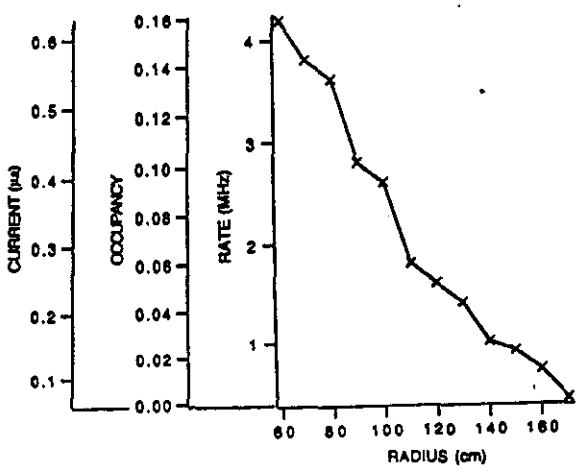

Fig. 7. The radial dependence of the hit rate, occupancy, and current draw versus radius of superlayers.

Although the occupancy is high, a Monte Carlo study at Colorado[5] has shown that the number of hits found in a superlayer remains very high even in the inner super- layers. The number of good 7 hit segments in a super- layer with 8 layers is about 90% at design luminosity at 75 cm radius and climbs to about 98% at the outer super- layer. This is is a very encouraging study and is being continued with more realistic tube efficiencies to determine the optimal number of straw layers.

These simulation studies show us what we can expect at SSC and what sort of detectors will be required. However, what must now be addressed is whether such detectors exist or can be built. This past year there has been a considerable amount of work on straw drift chamber R&D.

Gas selection:

CF_4-Isobutane(20%) appears we can be the most promising gas for use at SSC. In Fig. 8 the drift time distribution for a 4 mm straw drift tube filled with CF_4-Isobutane(20%) is shown. It has a drift time of about 19 ns. Additional measurements with 20% Isobutane show that straw chambers are fully efficient above 1900 volts.

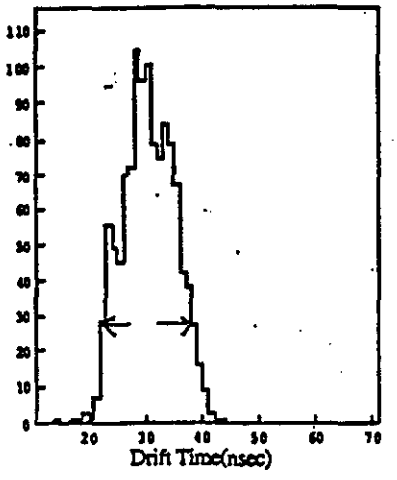

Fig. 8. Drift time distributions in a 4 mm straw for CF_4-Isobutane (20%).

Detailed measurements of the gain have been made by several groups[6]. As shown in Fig. 9, the gain of the CF_4-Isobutane chambers is about 30,000 at 1900 volts for 4 mm straws and 25 μ wire diameter. The measurements shown in the figure were made on a 3.5 meter straw system. At Princeton University the single cluster timing distributions have been measured.[7] These were used to determine the diffusion limit of spatial resolution for 3.5 mm drifts. As can be seen from Fig. 10, the diffusion limit for CF_4-Isobutane is about 40 μ. All of these measurements indicate that a fast efficient gas with good resolution in already in hand for the design of straw chambers.

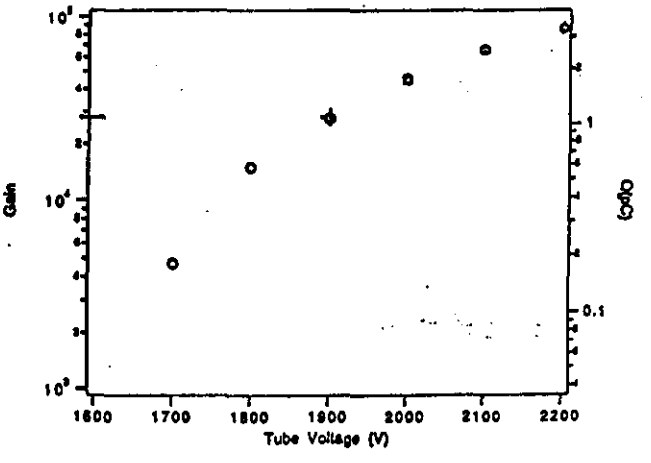

Fig. 9. Gain measurement on 3.5 meter straw chamber for CF_4-Isobutane (20%) 4 mm straw 25 m wire.

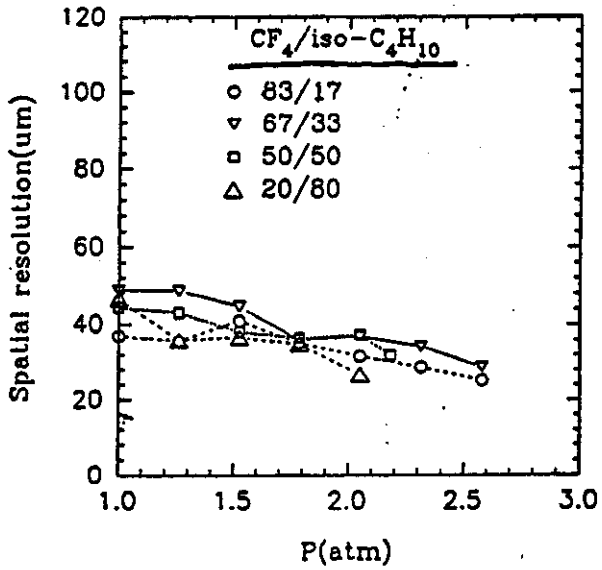

Fig. 10. Diffusion limit for CF_4.Isobutane for 3.5 mm drift.

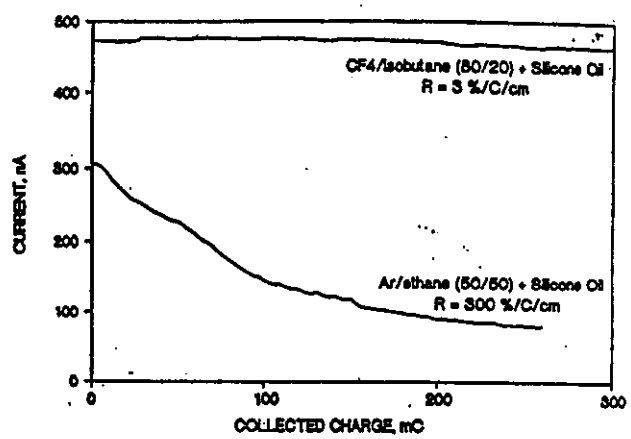

Fig. 11. The gain of a contaminated straw chamber system with CF4- Isobutane(20%) and Ar-ethane (50%) as a function of total charge.

Wire lifetimes

There are a number of questions to be addressed concerning the lifetime of straw chambers at SSC. It is expected that wire gain and long term contamination will be a function of the gas used in the drift cell. However, the other area of concern is the mechanical or structural damage due to the high radiation dose of components. During this past year there has been considerable progress in this areas.

In Fig. 11 we show some of the work that has been done at LBL.[8] The wire gain of CF_4 - Isobutane(20%) is compared to Ar/ethane with a known contaminant injected in the chamber. The CF_4 gas show little sign of damage , but the Ar/ethane gain is seriously degraded. It appears that the CF_4/Isobutane mixture has the ability to clean the signal wires. This has been also reported by a group at TRIUMF.[9] In Fig. 12 a previously contaminated chamber running on Argon/Ethane is shown to return to its original state when running in CF4-Isobutane. The damaged area was isolated to a small region in the middle of the wire. After an accumulated charge of about 1 C/cm it had completely recovered.

These measurements give us confidence that wire gain should remain constant at the SSC over the lifetime of the experiment for luminosities far above the design.

Neutron Damage

There were two reports at this conference on neutron damage to straw chambers. The North Carolina State reactor PULSTAR [10] was used to irradiate mylar straws and glued straws in chamber arrays with thermal neutron fluences up to 10^{16} cm^{-2} and fast neutrons fluences up to 10^{15} cm^{-2}. The basics straw components are confirmed to survive at much higher fluences than those expected at SSC.

A dramatic test of an operating straw chamber has been reported by a group at Boston University.[11] A 25 straw array was subjected to a 0.5 MeV neutron flux of 7 x 10^7 / cm ^{2}/ sec . The straw chambers used CF4 gas and was running typically at 5 MHz. and drawing 15 µa of current. The total fluence of neutrons was 6.5 x 10^{14}/ cm ^{2} and no damage or gain loss was reported. Both of these tests give us confidence that the radiation levels predicted for SSC will present no obstacle to the operation of straw chambers.

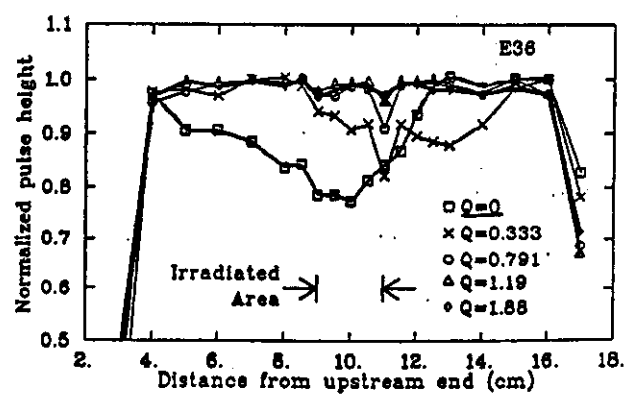

Fig. 12. The pulse height of a straw drift chamber with a contaminated central region (10 cm) for different amounts of total charge deposited.

High Rate tests

The principle long range activity of the groups working on straw chambers is to demonstrate that tracking in a high rate beam is possible. Ideally this should be with a full length (3 meter) straw system. Preparations are underway for such tests.

At Indiana University construction has started on a number of short 64 straw modules. These can be used for trigger and electronics tests by members of the SDC collaboration. A full length module is now under design at Oak Ridge and Indiana University. By next summer a full scale module should be ready for testing. At Duke University a full length cylinder of radius 0.8 meters is being constructed. This prototype superlayer can be used for high rate tests, and for verifying construction techniques.

Electronic related R&D

Signal size

There are a large number of electronics related issues under study. These include measurements of the signal size, effects of straw capacitance and attenuation in the straw chambers. There is also design of the preamps, shapers and fast TDC underway with an emphasis on high density, low power consumption, and radiation hardness. Finally, a design for a fast level one trigger has been worked out and will soon be tested on a straw module.

Detailed calculations of the signal size expected with 3 meter straw chambers have been carried out at KEK[12] for a 7 mm straws with a slow gas (Ar/ Ethane). It is expected that a 4 mm straw diameter and a fast gas like CF4- Isobutane will give more that twice the signal size. From these calculations we can estimate the time jitter and time walk expected in a 3 meter straw at SSC. There does not seem to any difficulty in principle to attaining 100-150 micron position resolution.

In Fig. 13 a pulse in a 3.6 meter straw chamber is shown along with the reflection pulse from the unterminated end.

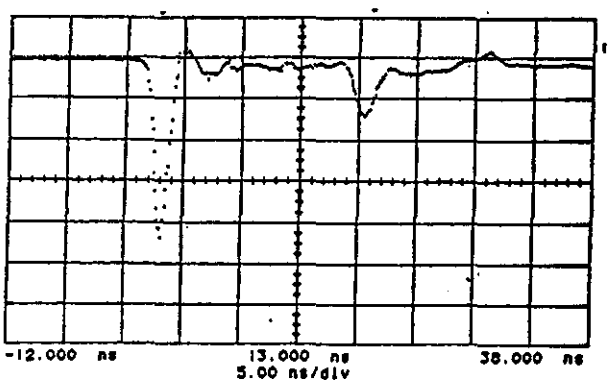

Fig. 13. The signal from an Fe 55 source for a 3.6 meter straw system. The reflection pulse can be seen to be attenuated.

Termination has also been applied to eliminate the reflected signal.The attenuation of reflected pulse in the figure indicates one of the areas of interest in R&D. This attenuation comes about due to the resistivity of the cathode material and the signal wire. The resistance of both wire and cathode were about 100 ohm/meter in the test shown in the figure, whereas the coaxial impedance of the straw is about 300 ohms.

The signal attenuation in straw chambers has been measured by several groups[13] and is shown in Fig. 14. The average attenuation length is about 5 meters. There are several ways to increase the attenuation length. Work is in progress on with lower resistance cathodes and larger diameter wires. The effect of appreciable attenuation would require an increase of gain in the straws and might require a more elaborate analysis to attain the desired time resolution.

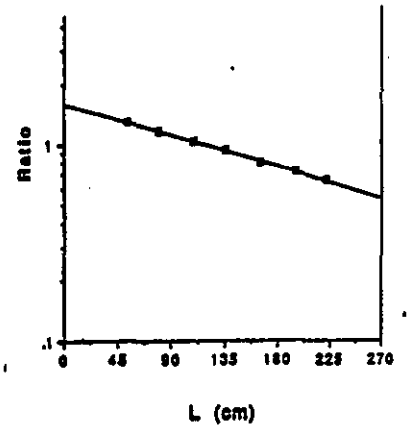

Fig. 14. Measurements of the signal attenuation for a 2.3 meter straws.

Signal electronics

The drift chamber electronics has been worked on by groups from University of Pennsylvania[14] and the Japanese laboratory, KEK[15]. The system that is being designed by the group from the US is shown in Fig. 15. It consists of a preamplifier, shaper, discriminator, and time to voltage convertor, and an analog memory for the Level 1 and Level 2 triggers. Their design has progressed significantly in the past year. They now have prototype chips with low threshold, low power and radiation hardness sufficient for SSC. The prototype preamplifiers have been used on several of the straw chambers, in fact they were crucial in the measurements of the single cluster characteristic presented by Princeton University. We anticipate that in the next year we will have a sufficient quantity of the amplifiers and shapers to test several straw modules. The time to voltage converters (TVC) and the analog storage are shown in somewhat more detail in Fig. 16. We anticipate that the first prototypes of this will also be available next year. KEK is working on an alternative method (the TMC) of measuring the time and storing it for a level 1 trigger.

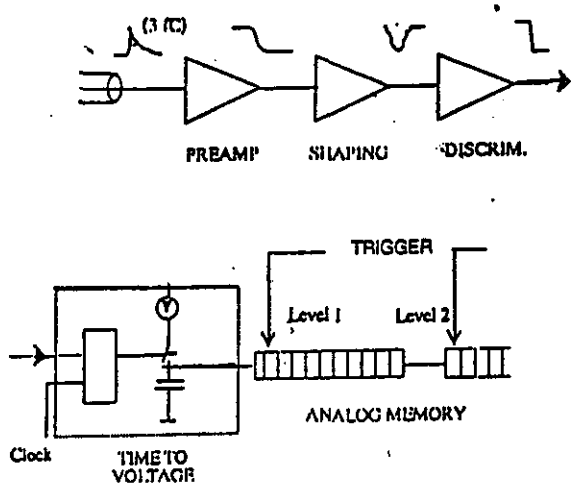

Fig. 15. A diagram of the straw chamber electronics.

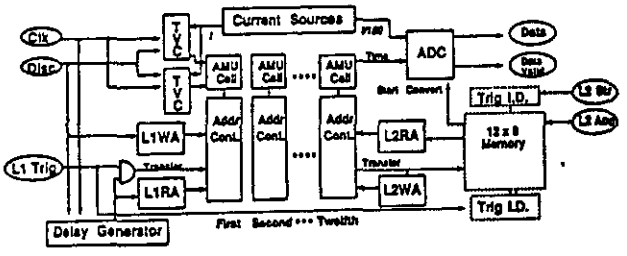

Fig. 16. Details of the TVC and level 1 and 2 triggers.

This Time Memory Converter or TMC is shown in Fig. 17. The chip has progressed to the fabrication stage, and should be available to test in a chamber by the end of the year. At University of Colorado there has been an attempt to design the layout for all of the front end electronics for a straw module. The resulting board layout is shown in Fig. 18. This is an existence proof that a compact layout of preamplifiers, shapers TVC along with all data and read out lines will fit in the modular scheme. The trigger electronics has also made real progress this year. At the University of Michigan[16] a real time trigger has been designed to find stiff tracks in a straw superlayer. The technique and the circuit is shown in Figure 19. The scheme relies on the layout of straw wires along radial rays from the intersection region. In this case a stiff track will produce a fixed relationship between the drift times in three successive straw layers. A synchronizer circuit will trigger on a stiff track within 30 ns of the arrival of the last pulse. The circuit has been designed and constructed. Testing will begin this fall.

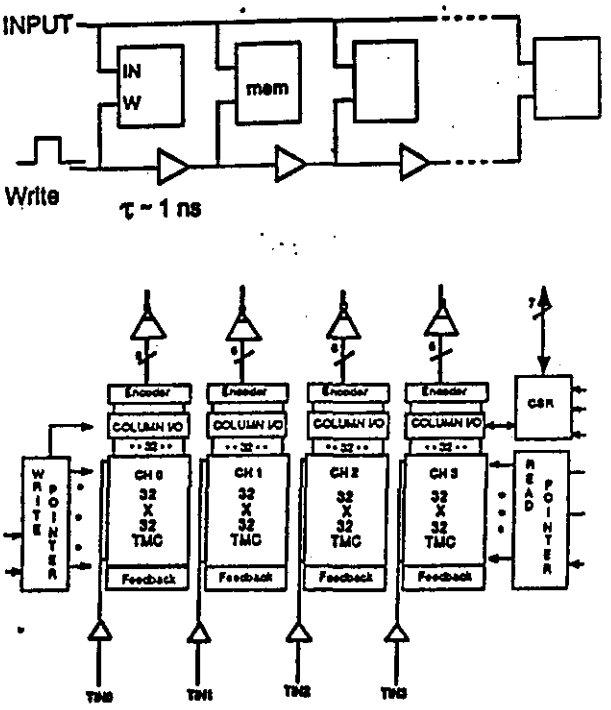

Fig. 17. The Time Memory Chip for recording and storing timing information from the straw chambers.

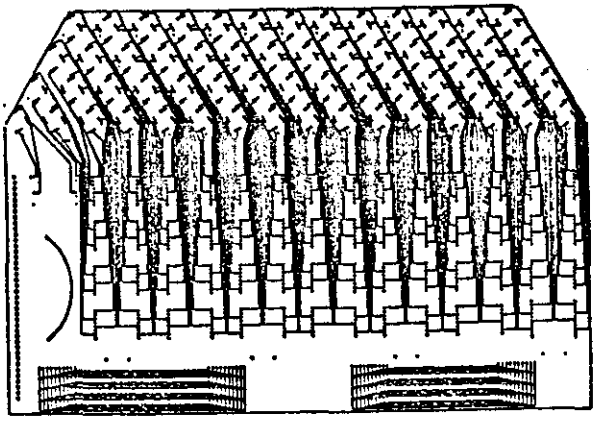

Fig. 18. A prototype layout of the front end electronics for a straw module.

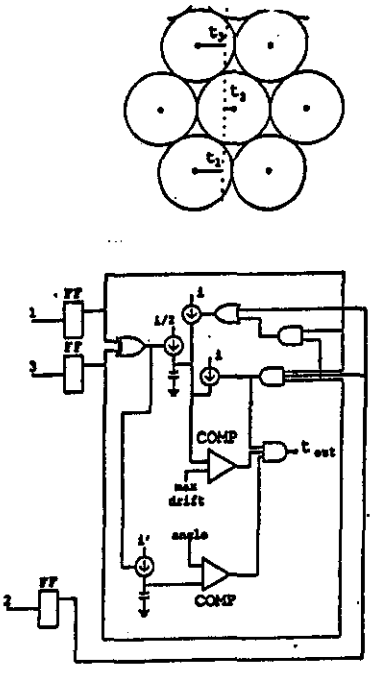

Fig. 19. The synchronizer circuit for triggering on triads of straw in the straw superlayer.

This has been a very productive year for the electronics R&D. Many circuits are now in the prototype stage and are ready for testing. The next step is to measure the high rate capabilities of the electronics and to confront the important details of chamber design such as proper straw resistance, proper wire attenuation, problems of capacitance, shielding and grounds.

Engineering R&D

Prototype Construction

Straw chamber prototypes have been built at Indiana University, Duke University, Boston University, and Princeton University. The problems of wire support and straw support have been solved in a number of different ways. At Duke a 25 straw system has been constructed. The straws were laid out and glued together on a flat grooved substrate. The straw length was 2.7 meters and the diameter was 4 mm. Measurements of the horizontal position in various rows show that the straws position for this configuration could be held to about 2 mils. This same system was instrumented and run at high voltage successfully. There is an ongoing program to study ways to accurately layout and glue the straws to the support cylinders in this hybrid scheme. A large prototype full length cylinder of 0.8 meter radius is being worked on. At Princeton University there is also work on building large structures of 7 mm diameter straws for a BCD experiment. Several straw clusters have been constructed and a novel method of pressurizing the straws to handle them has been worked out.[17] At Indiana University a 6 straw 3.6 meter long assemble was tested with electronics from University of Pennsylvania and attenuation in the system measured.[18] The major work at Indiana now, however, is the construction of modular arrays to hold the straws in position. A 64 straw module shown in Fig. 20 has been constructed and is now under testing. The support shell is 300 μ thick carbon fiber composite. The end plates have been designed to have very little material. The positioning of the straws and wires is accomplished by self centering of the wire supports within the shell. This wire support is shown in Fig. 21. It consisted of two identical molded pieces that snap together to form a cylinder with opposing V shaped passages at either end. It has the added advantage that the straw chamber can be strung after being assembled, or can be rewired if there is wire breakage.

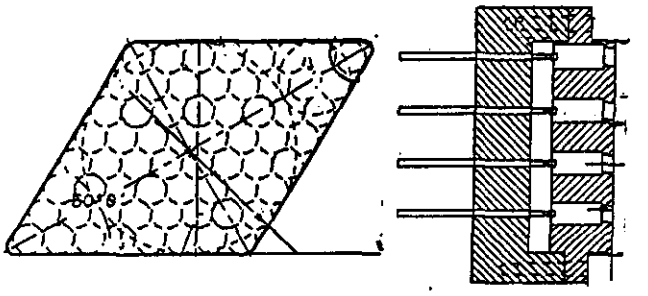

Fig. 20. Detail of the end and side view of a 64 straw module.

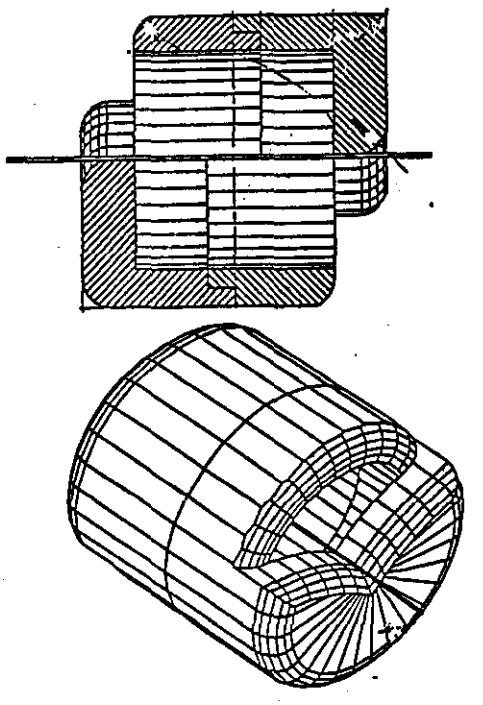

Fig. 21. Two view of a "double V" wire support.

Design Studies

Modular Tracker

All of the tracker engineering construction techniques are driven by the two somewhat incompatible considerations: First the amount of material must be kept small and second the straws and wires must be aligned with about 50 micron precision and be stable in that configuration.

The calculation of the radiation length versus eta for the SDC tracking system shows that in the region of the endplate of the central tracker there is more that 20% of a radiation length. It is difficult to reduce this significantly, since each superlayer has less than 1% of a radiation length for perpendicular traversals, and about 1/2 of this is from the straws themselves. The engineering challenge is to design a support system with 60-75 m tolerance with light weight materials. One support scheme that has been designed by Westinghouse[19] is shown in Fig. 22. The modules are held in position by a rigid support frame at three points. These frames have to only support the modules and not the wire tension, so they can be very light. They would be made from light weight carbon composites. Each module has a set of alignment pins that locate and hold it in position in the support disks. Four of the eight superlayers would be stereo layers. These are constructed by using the same modules as in the axial layers, but rotating them by 3 degrees. Modules could be assembled into the frame as the final operation after all electronics testing was complete and modules could be replaced in the case of accidental damage.

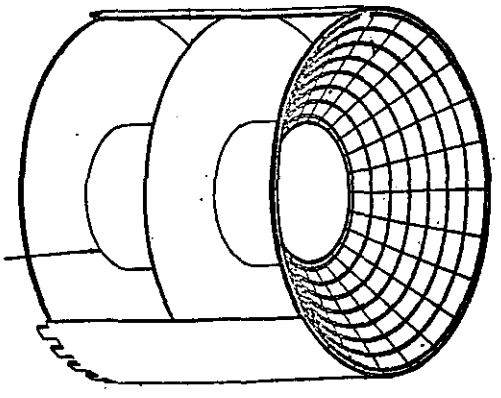

Fig. 22. An assembly drawing of one half of the modular drift chamber tracker showing the support system.

Hybrid Tracker

The hybrid central tracker is shown in Fig. 4. The design work on this tracker has been done at Oak Ridge National Laboratory.[20] In this concept the straws are supported on full length cylinders that are held on the ends by a cone and ring support. The details of the endplate with utilities are shown in Fig.23. This endplate must support wire tension for the entire cylinder, and also serve as the precision wire positioner. The amount of material in the support cylinder is comparable to the modular approach, however, there would need to be extra cylinders for the scintillating fiber layers. During this coming year both techniques will be designed in much more detail.The major R&D for reduction of material is in the endplates and utilities. This is being worked on at ORNL.

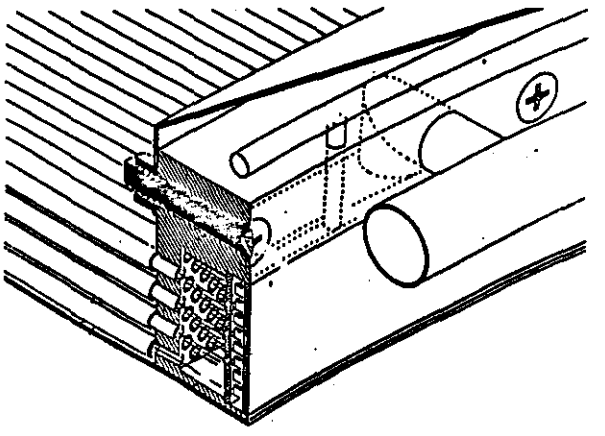

Fig. 23. Details of the endplate for the Hybrid design, showing utilities.

TRD Tracker

At CERN [21] there have been several very impressive tests of a straw tracking system coupled with TRD possibilities. A large array of straw tubes was tested in a CERN beam line to verify that the TDR tracking cell would give the resolution required by EMPACT. They found that using only the cell hits (and not drift time) they were able to achieve an position resolution of 0.4 mm. At Boston University a strawless detector is being developed.[22] The idea is to combine two foam molds with cylindrical depressions into a straw chamber. This has the advantage of low mass, ease of construction, and economy of handing. It may well be excellent solution to the short straw arrays required for EMPACT.

Intermediate Tracker

Radial Chamber

The intermediate tracker design is being worked on by several groups in the United Kingdom.[23] The design is based on the radial chambers being built for the H1 experiment at HERA. The details of the design are shown in Fig. 3. and Fig. 24. The present design involves 5 radial chambers position along the z axis. They each span a 50 cm to 150 cm radial space. Each has 300 azimuthal cells with a maximum drift distance of 15.7 mm. Within each module there are 8 layers of drift cells. The long drift times could be a problem at SSC where the bunch crossing is 16 ns., so a plane of tagging counters is placed in front of each radial chamber. These " bunch tagging counters" are shown in Fig. 25. The tagging counter time resolution is about three crossing times. This has been shown to be sufficient to result in good pattern recognition in the radial chamber. The R&D effort at present is concentrating on current draw in the voltage

grading resistors. Because of the higher currents in the chambers at SSC this could be a difficult problem. Also the Lorentz angle for the drift gas (CF4) must be measured[24]. This work is already underway and first results were presented at this conference. One of the primary advantages of the radial wire chamber is that the geometry matches the physics in the forward region and an excellent tracking system can be built with very few electronics channels. It is anticipated that the total channel count from both ends will be less than 50K. There is also an active design program on electronics for radial chambers at Rutherford Laboratory. Alternative devices such as microstrip chambers are also under study.

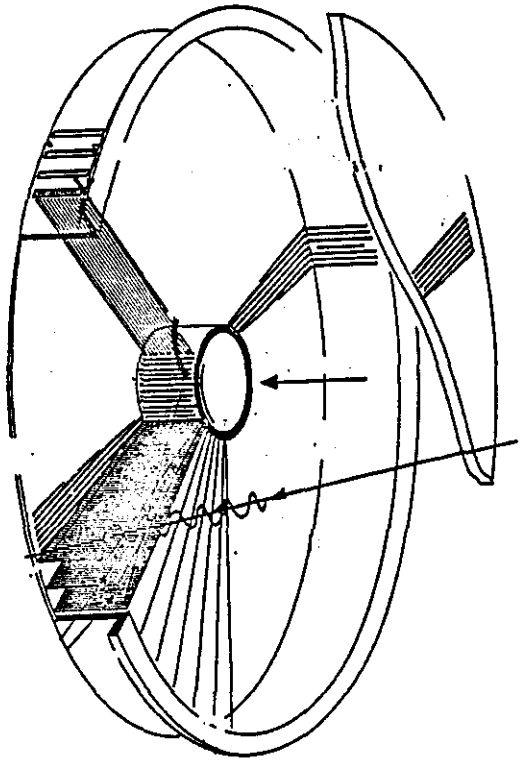

Fig. 24. Details of a radial wire chamber. The SDC version would have larger inner and outer radii and 300 sectors.

New Gaseous Chambers

In the intermediate region there have been a number of proposed detectors in addition to the radial wire chambers. Groups from Japan [25]and Texas[26] have been developing a new type of gaseous discharge chamber called the knife edge chamber with a signal and cathode structure printed on silicon. Reports from both groups were presented at this conference. In the case of the Texas design, an intermediate tracker has been proposed and the design started. Another technique being looked into at University of Rochester[27] is a resistive cathode drift cell. This scheme effectively uses a drift pad with hexagonal pads to fill the forward area. Each pad has a graded voltage for electron to drift toward the center pin where they avalanche. Scanning Tunneling Microscope points could be use for the discharge pins. Work is under way to design in intermediate tracker with such a system.

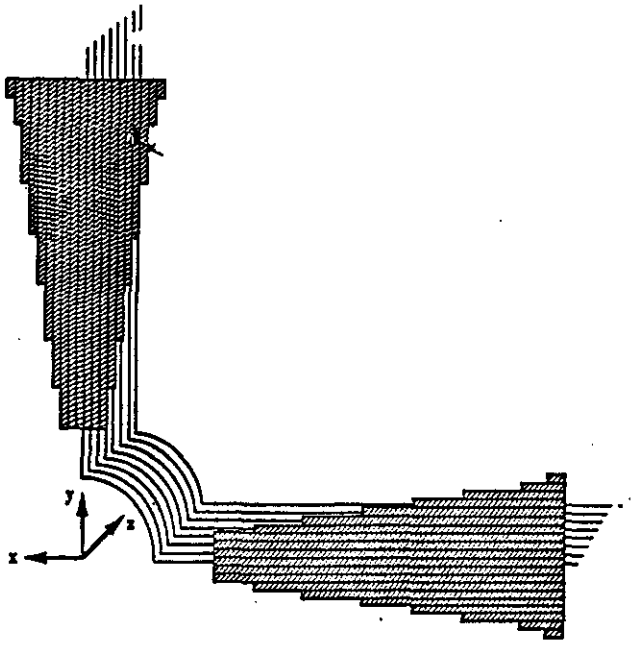

Fig. 25. Details of the bunch tagger counter which covers each sector and tags the proper bunch crossing time.

Summary

Wire chambers can play an important role at the SSC. Although straw drift chamber are a mature technique, there have been a number of innovations in straw drift chambers during the past year. All of the principle SSC detectors have been developing straw chambers and have concluded that such systems are feasible. The counting rates in the straws are high, but Monte Carlo studies indicate that tracking looks promising at and above design luminosity. The chamber lifetimes with CF_4 gases look very good.and radiation effects appear to be no problem at SSC for CF_4 gas mixtures.

In the intermediate region there is a radial wire chamber design under study and there are newer gaseous chambers that look promising.

Full scale tests are being planned to verify tracking at high rates and to confirm the triggering aspect of straw chambers.

[1] The members of the Wire tracking Subsystem group are Indiana University, University of Colorado, University of Pennsylvania, University of Liverpool, University of Glasgow, Rutherford Laboratory, KEK, Westinghouse Science and Technology Center, LBL and Oak Ridge National Laboratory.

[2] The members of the Hybrid Tracking subsystem are CBAF, Duke University, Florida State University, General Electric Canada, KEK, North Carolina State University, Northeastern University, Oak Ridge National Laboratory, Quantum Research Services, Supercomputer Calculations Research Institute, TRIUMF, and University of Pennsylvania.

[3] Asai- International Workshop on detectors for SSC, April, 1990, p260. The original plot was only for hit rate, which was scaled for the other parameters based on calculations at Indiana University.

[4] M. Corden, Proceeding of this conference. He predicts 17% at the first superlayer, and 3% at the final superlayer.

[5] W. Ford.and M Lohner "Track Reconstruction in Straw Superlayrs", Proceedings of this conference.

[6] C. Neyman, "Gain of a 3.65 m Straw Drift Tube", IUHEE-90-12.

[7] C. Lu "Investigations of a Single electrons' behavior in a proportional drift tube." Proceedings of this conference..

[8] J. Kadyk, J. Vavra. and J. Wise " Use of Straw tubes in High-Radiation Environments" Slac-pub 5306, and J. Kadyk,Proceedings of this conference.

[9] R.Henderson " Etching of Anode Wire Deposits with CF_4/Isobutane" Proceeding of this conference.

[10] W. Dunn " Radiation Damage Studies of Straw Tube and Scintillating Fiber components" Proceedings of this conference,

[11] B. Zhou " New Results on SSC Tracking Studies" WorkShop on Major SSC Detectors , Tuscon, Ar. ,Feb. 18,1990 ; S.Ahlen Private communication.

[12] H. Iwosaki " A time resolution study of Straw Chambers.". Kek, 89-158

[13] C. Neyman Attenuation Studies of 3.5 meter Straw Tubes" IUHEE-90-7 ; S. Oh, "Performance of a Prototype 3 meter Straw chamber", Proceedings of this conference.

[14] F. Newcomer et. al "A fast Monolithic Preamp and Shaper for High Rate Gas Tracking Detectors", Penn electronics Publication to appear in IEEE Trans. Nuclear Physics

[15] Y. Arai, "Development of TMC Chip and On-Chip Processing" " Proceeding of International Workshop on Solenoidal Detectors for the SSC, 1990 p 453.

[16] J. Chapman, " Synchronizer Development Update" , Proceedings of this conference.

[17] J. Armitage, "A Straw Tracking System", Proceedings of this conference.

[18] Ogren "Progress Report on 4 mm Straw chambers" International Workshop on Solenoidal Detectors for the SSC, 1990 p 302.

[19] R. Swensrud, " Design of a modular Straw tracking chamber", Proceedings of this conference.

[20] T. Ryan, " Design of the Hybrid Tracker and Utilities" Proceedings of this conference.

[21] V. Polychronakos "Particle Identification and Tracking with Transition Radiation Detectors", Proceedings of this conference.

[22] S. Whitaker, Private communication

[23] University of Liverpool, University of Glasgow, and Rutherford Laboratory are working on this design. D. Saxon " Forward Tracking with Enhanced Electron Indentification", Proceedings of this conference.

[24] J. Baily, " A measurement of the Electron Drift in Fast Gases" Proceeding of this conference.

[25] A.Maki, " The knife edge chamber R&D at KEK" , Proceedings of this conference.

[26] P. McIntyre, "Knife Edge chambers", High resolution tracking for he SSC detectors." Proceedings of this conference.

[27] Sills, "Advanced Field Shaping Drift Chambers for SSC Muon Tracking", Proceedings of this conference.

Department of Physics, Indiana University
Bloomington, Indiana 47405

Abstract

All of the major SSC proposed detectors use wire chambers in their tracking systems. The feasibility of wire chambers in an SSC detector has now been established by a number of groups planning detectors at SSC.The major advances during the past year in understanding straw tube drift chambers are presented and several innovations in gaseous wire chambers are discussed.

Introduction

I will try to review the work that has gone on during the past year on wire chambers at SSC. The major part of this will have to do with straw drift chambers, since they are present in all three major detectors proposed at SSC. This talk is divided into two major parts. I will quickly review the wire chambers being planned for SSC detectors and then outline the major areas of research and development for the SSC environment. The R&D section will concentrate on progress in drift cell design, electronics and signal processing, and engineering aspects of the tracking designs.

Wire Chambers at SSC

SDC

The wire chamber tracking system that is being planned for SDC is shown in Fig. 1. It consists of a central tracking system built from straw drift tubes contained in modules as shown in Fig. 2. This design has been worked on primarily by the Wire Tracking Subsystem Group. [1] The central tracker uses 4 mm diameter straws with lengths varying from 4 meters to 2 meters from the outside radius of 1.7 meters to the inside 0.70 meter layers. The total number of modules in the two z halves is 1088 and the total number of straws is about 188,000. As we will see, a good deal of the R&D concerns itself with producing a simple construction and assembly scheme for this large number of straws. The modular approach for the construction will allow each module to be tested with final electronics before insertion into the tracker. The modules also group the straws in precise position and support the wire load of approximately 12 Kg per module. The tracking system in the intermediate region is a radial wire chamber as shown in Fig. 3. The tracking in the intermediate region is being worked on primarily by the groups from the United Kingdom. The present intermediate tracker consists of a radial wire chamber module with a wire "bunch tagger chamber" immediately in front. This tagger has sufficient timing resolution to select the proper crossing time for each event and tag the event for the somewhat slower radial wire chambers. There would be five radial modules required for a precise measurement of the track momentum in the forward direction.

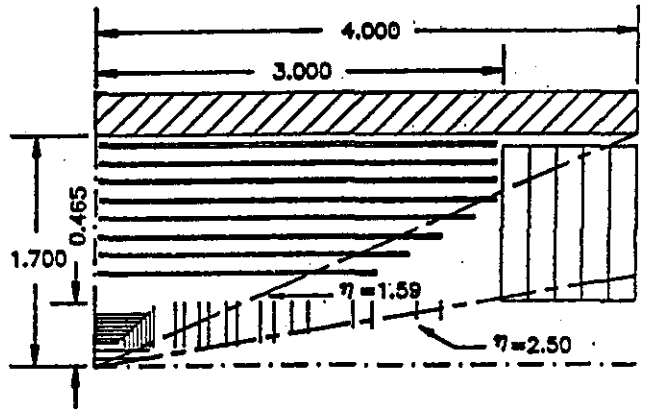

Fig.1. Tracking system for the SDC detector. The straw chamber superlayers surround the silicon system and radial wire chambers are used in the intermediate angle region.

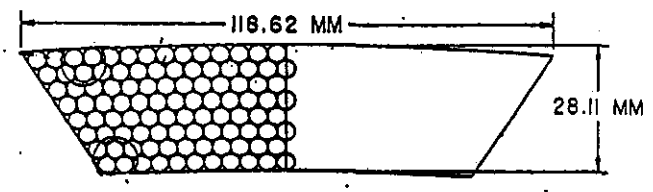

Fig.2. Straw module holding 196 straws. The module walls are constructed from a 250 μ carbon fiber composite.

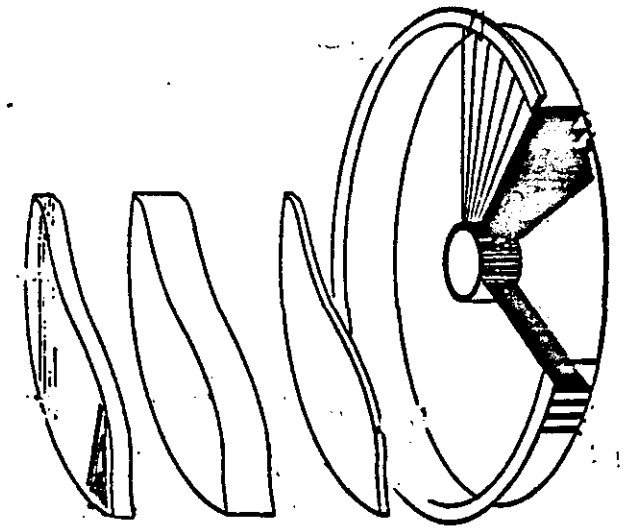

Fig. 3. An exploded view of the radial wire chamber with a bunch tagger and a transition radiation section in front.

Work is also being done on a "Hybrid" detector, consisting of axial straw superlayers and scintillating fiber stereo layers. This has been pursued in some detail by the Hybrid Tracking Subsystem Group.[2] The Hybrid tracker is shown in Fig. 4. The straw layers are glued to a precision cylinder, supported from each end by a conical support. Stereo scintillating fibers are attached to a separate support cylinder on the outer 2 or 3 superlayers. The tracker would use 4 mm straws and 750 micron scintillating fibers.

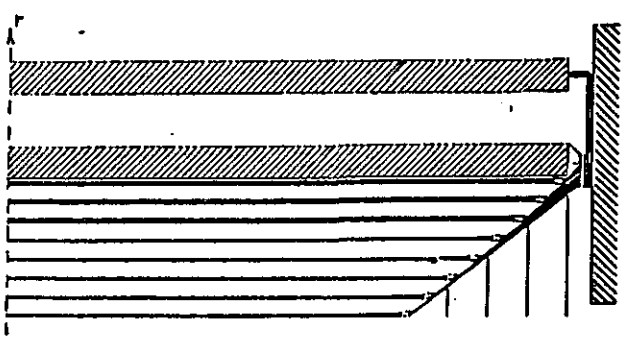

Fig. 4. Superlayer structure for the Hybrid Chamber.

EMPACT

The EMPACT tracker is shown in Fig. 5. As shown in the detailed close-up, straw chambers are used for tracking and transition radiation detectors. These drift tubes are arranged in modules that span a small delta phi, delta z region. There are a total of 385K readout channels for this straw tracker. Although TDCs will not be used for each channel, the pulse height will be digitized for electron id. This wire tracking and electron id work is being pursued by Boston University and Brookhaven National Laboratory.

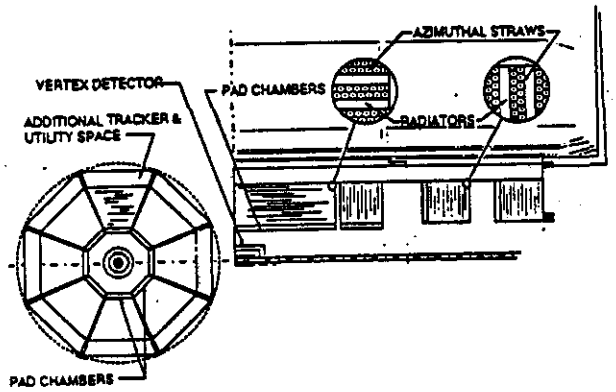

Fig. 5. End and side views of the EMPACT detector. The TRD chambers use straw tubes.

LSTAR

The central wire and scintillating fiber tracker for the LSTAR detector can be seen in Fig. 6. The straw tube chamber fills the region from a radius of 40 cm out to 75 cm and is about 2.8 meters long. The straw tracking system has about 75K channels with TDCs on all wires. As in the Hybrid system, the stereo tracking is done with scintillating fibers. The groups working on the straw chambers are from Boston University, New Mexico University, Indiana University and Los Alamos National Laboratory.

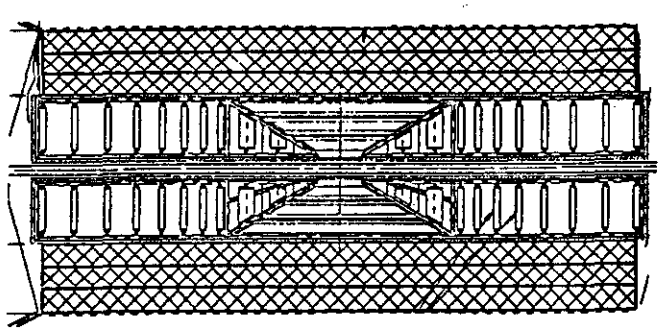

Fig. 6. The tracker for the LSTAR detector. The outer straw and scintillating fiber modules surround a silicon system.

Major Areas of R&D for the SSC Environment

Drift Cell Research

One of the central concerns in tracking at the SSC with straw chambers is shown in Fig. 7. This plot shows the occupancy, hit rate, and current for a straw drift cell in the SDC detector as a function of the radius. The cells were assumed to be half the length of the detector. The calculation was was carried out at KEK[3] and used a PYTHIA particle generator, and GEANT for detector simulation. All known materials were included in the model, and looping tracks in the magnetic field were used. We see that we can expect occupancies near 16% at the inner radius, and currents of up to .6 μ amps. Similar calculations have been carried out by other groups[4] and are in agreement with these basic numbers.

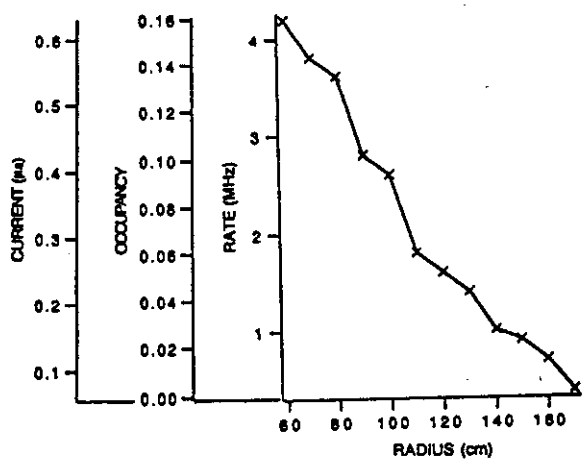

Fig. 7. The radial dependence of the hit rate, occupancy, and current draw versus radius of superlayers.

Although the occupancy is high, a Monte Carlo study at Colorado[5] has shown that the number of hits found in a superlayer remains very high even in the inner super- layers. The number of good 7 hit segments in a super- layer with 8 layers is about 90% at design luminosity at 75 cm radius and climbs to about 98% at the outer super- layer. This is is a very encouraging study and is being continued with more realistic tube efficiencies to determine the optimal number of straw layers.

These simulation studies show us what we can expect at SSC and what sort of detectors will be required. However, what must now be addressed is whether such detectors exist or can be built. This past year there has been a considerable amount of work on straw drift chamber R&D.

Gas selection:

CF_4-Isobutane(20%) appears we can be the most promising gas for use at SSC. In Fig. 8 the drift time distribution for a 4 mm straw drift tube filled with CF_4-Isobutane(20%) is shown. It has a drift time of about 19 ns. Additional measurements with 20% Isobutane show that straw chambers are fully efficient above 1900 volts.

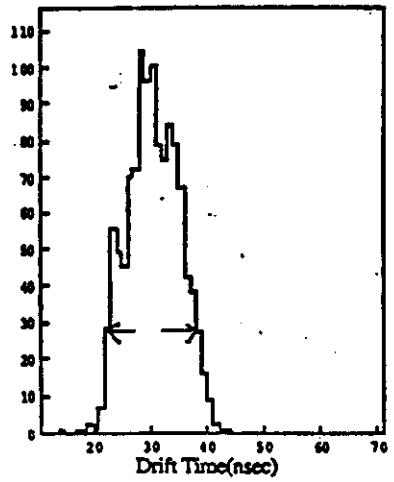

Fig. 8. Drift time distributions in a 4 mm straw for CF_4-Isobutane (20%).

Detailed measurements of the gain have been made by several groups[6]. As shown in Fig. 9, the gain of the CF_4-Isobutane chambers is about 30,000 at 1900 volts for 4 mm straws and 25 μ wire diameter. The measurements shown in the figure were made on a 3.5 meter straw system. At Princeton University the single cluster timing distributions have been measured.[7] These were used to determine the diffusion limit of spatial resolution for 3.5 mm drifts. As can be seen from Fig. 10, the diffusion limit for CF_4-Isobutane is about 40 μ. All of these measurements indicate that a fast efficient gas with good resolution in already in hand for the design of straw chambers.

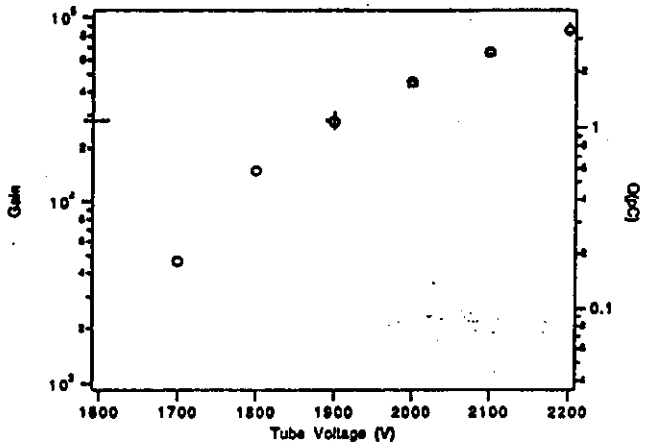

Fig. 9. Gain measurement on 3.5 meter straw chamber for CF_4-Isobutane (20%) 4 mm straw 25 m wire.

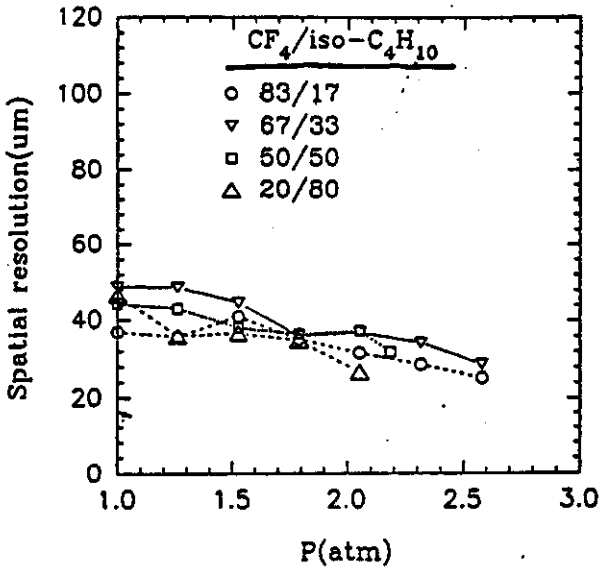

Fig. 10. Diffusion limit for CF_4-Isobutane for 3.5 mm drift.

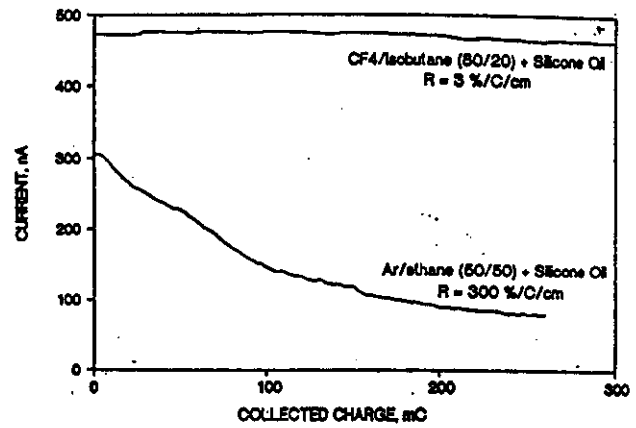

Fig. 11. The gain of a contaminated straw chamber system with CF4- Isobutane(20%) and Ar-ethane (50%) as a function of total charge.

Wire lifetimes

There are a number of questions to be addressed concerning the lifetime of straw chambers at SSC. It is expected that wire gain and long term contamination will be a function of the gas used in the drift cell. However, the other area of concern is the mechanical or structural damage due to the high radiation dose of components. During this past year there has been considerable progress in this areas.

In Fig. 11 we show some of the work that has been done at LBL.[8] The wire gain of CF_4 - Isobutane(20%) is compared to Ar/ethane with a known contaminant injected in the chamber. The CF_4 gas show little sign of damage , but the Ar/ethane gain is seriously degraded. It appears that the CF_4/Isobutane mixture has the ability to clean the signal wires. This has been also reported by a group at TRIUMF.[9] In Fig. 12 a previously contaminated chamber running on Argon/Ethane is shown to return to its original state when running in CF4-Isobutane. The damaged area was isolated to a small region in the middle of the wire. After an accumulated charge of about 1 C/cm it had completely recovered.

These measurements give us confidence that wire gain should remain constant at the SSC over the lifetime of the experiment for luminosities far above the design.

Neutron Damage

There were two reports at this conference on neutron damage to straw chambers. The North Carolina State reactor PULSTAR [10] was used to irradiate mylar straws and glued straws in chamber arrays with thermal neutron fluences up to 10^{16} cm^{-2} and fast neutrons fluences up to 10^{15} cm^{-2}. The basics straw components are confirmed to survive at much higher fluences than those expected at SSC.

A dramatic test of an operating straw chamber has been reported by a group at Boston University.[11] A 25 straw array was subjected to a 0.5 MeV neutron flux of 7 x 10^7 / cm ^{2}/ sec . The straw chambers used CF4 gas and was running typically at 5 MHz. and drawing 15 μa of current. The total fluence of neutrons was 6.5 x 10^{14}/ cm ^{2} and no damage or gain loss was reported. Both of these tests give us confidence that the radiation levels predicted for SSC will present no obstacle to the operation of straw chambers.

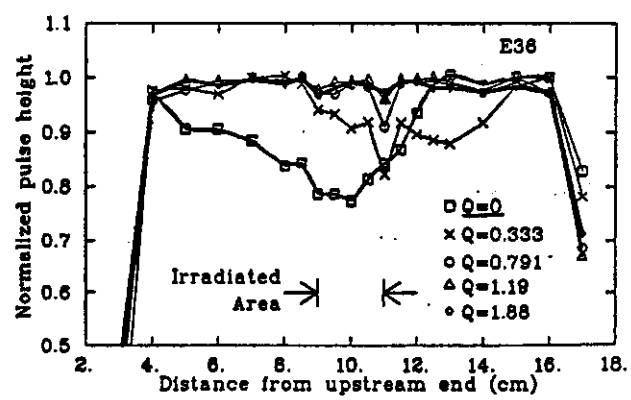

Fig. 12. The pulse height of a straw drift chamber with a contaminated central region (10 cm) for different amounts of total charge deposited.

High Rate tests

The principle long range activity of the groups working on straw chambers is to demonstrate that tracking in a high rate beam is possible. Ideally this should be with a full length (3 meter) straw system. Preparations are underway for such tests.

At Indiana University construction has started on a number of short 64 straw modules. These can be used for trigger and electronics tests by members of the SDC collaboration. A full length module is now under design at Oak Ridge and Indiana University. By next summer a full scale module should be ready for testing. At Duke University a full length cylinder of radius 0.8 meters is being constructed. This prototype superlayer can be used for high rate tests, and for verifying construction techniques.

Electronic related R&D

Signal size

There are a large number of electronics related issues under study. These include measurements of the signal size, effects of straw capacitance and attenuation in the straw chambers. There is also design of the preamps, shapers and fast TDC underway with an emphasis on high density, low power consumption, and radiation hardness. Finally, a design for a fast level one trigger has been worked out and will soon be tested on a straw module.

Detailed calculations of the signal size expected with 3 meter straw chambers have been carried out at KEK[12] for a 7 mm straws with a slow gas (Ar/ Ethane). It is expected that a 4 mm straw diameter and a fast gas like CF4- Isobutane will give more that twice the signal size. From these calculations we can estimate the time jitter and time walk expected in a 3 meter straw at SSC. There does not seem to any difficulty in principle to attaining 100-150 micron position resolution.

In Fig. 13 a pulse in a 3.6 meter straw chamber is shown along with the reflection pulse from the unterminated end.

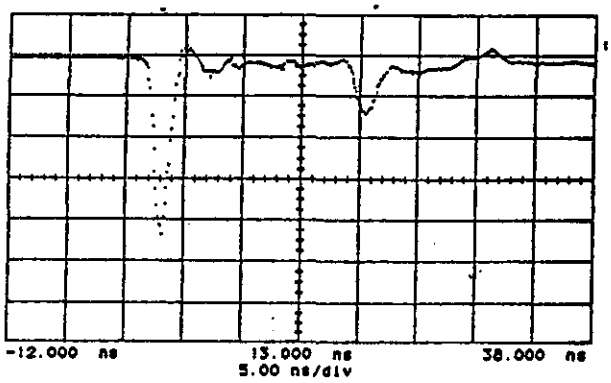

Fig. 13. The signal from an Fe 55 source for a 3.6 meter straw system. The reflection pulse can be seen to be attenuated.

Termination has also been applied to eliminate the reflected signal.The attenuation of reflected pulse in the figure indicates one of the areas of interest in R&D. This attenuation comes about due to the resistivity of the cathode material and the signal wire. The resistance of both wire and cathode were about 100 ohm/meter in the test shown in the figure, whereas the coaxial impedance of the straw is about 300 ohms.

The signal attenuation in straw chambers has been measured by several groups[13] and is shown in Fig. 14. The average attenuation length is about 5 meters. There are several ways to increase the attenuation length. Work is in progress on with lower resistance cathodes and larger diameter wires. The effect of appreciable attenuation would require an increase of gain in the straws and might require a more elaborate analysis to attain the desired time resolution.

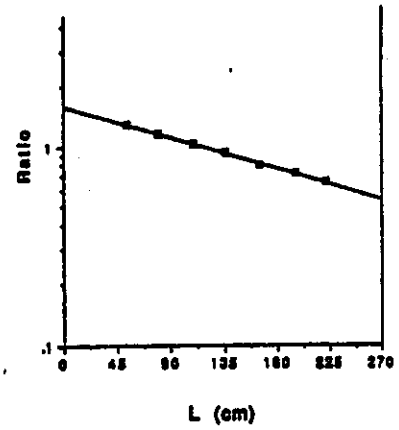

Fig. 14. Measurements of the signal attenuation for a 2.3 meter straws.

Signal electronics

The drift chamber electronics has been worked on by groups from University of Pennsylvania[14] and the Japanese laboratory, KEK[15]. The system that is being designed by the group from the US is shown in Fig. 15. It consists of a preamplifier, shaper, discriminator, and time to voltage convertor, and an analog memory for the Level 1 and Level 2 triggers. Their design has progressed significantly in the past year. They now have prototype chips with low threshold, low power and radiation hardness sufficient for SSC. The prototype preamplifiers have been used on several of the straw chambers, in fact they were crucial in the measurements of the single cluster characteristic presented by Princeton University. We anticipate that in the next year we will have a sufficient quantity of the amplifiers and shapers to test several straw modules. The time to voltage converters (TVC) and the analog storage are shown in somewhat more detail in Fig. 16. We anticipate that the first prototypes of this will also be available next year. KEK is working on an alternative method (the TMC) of measuring the time and storing it for a level I trigger.

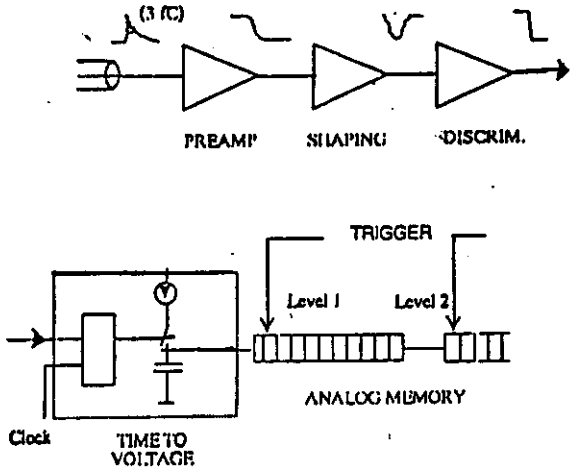

Fig. 15. A diagram of the straw chamber electronics.

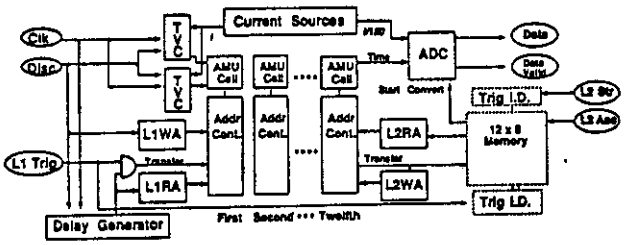

Fig. 16. Details of the TVC and level 1 and 2 triggers.

This Time Memory Converter or TMC is shown in Fig. 17. The chip has progressed to the fabrication stage, and should be available to test in a chamber by the end of the year. At University of Colorado there has been an attempt to design the layout for all of the front end electronics for a straw module. The resulting board layout is shown in Fig. 18. This is an existence proof that a compact layout of preamplifiers, shapers TVC along with all data and read out lines will fit in the modular scheme. The trigger electronics has also made real progress this year. At the University of Michigan[16] a real time trigger has been designed to find stiff tracks in a straw superlayer. The technique and the circuit is shown in Figure 19. The scheme relies on the layout of straw wires along radial rays from the intersection region. In this case a stiff track will produce a fixed relationship between the drift times in three successive straw layers. A synchronizer circuit will trigger on a stiff track within 30 ns of the arrival of the last pulse. The circuit has been designed and constructed. Testing will begin this fall.

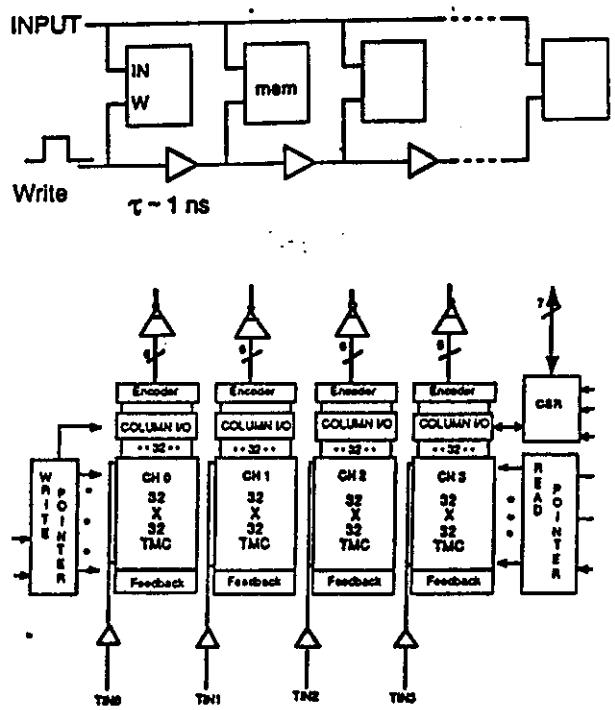

Fig. 17. The Time Memory Chip for recording and storing timing information from the straw chambers.

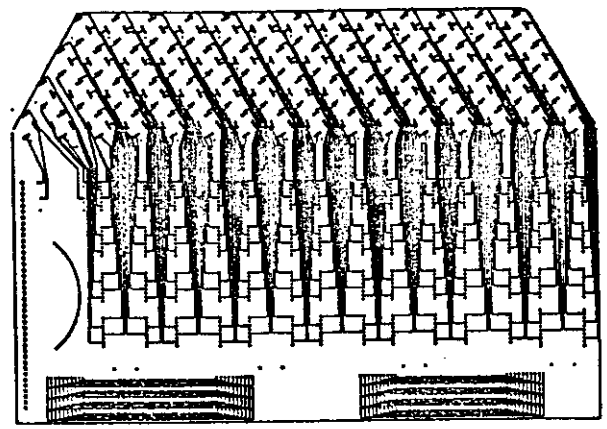

Fig. 18. A prototype layout of the front end electronics for a straw module.

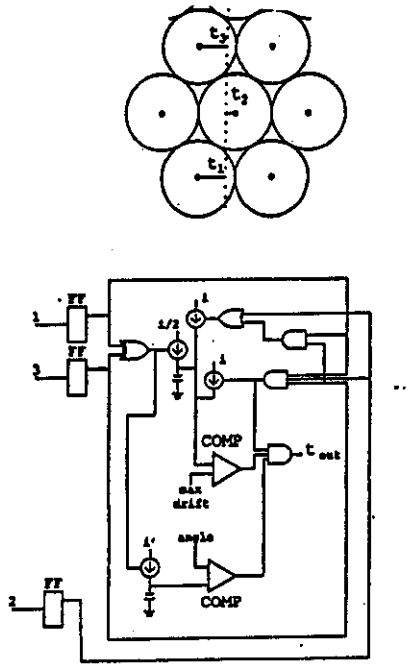

Fig. 19. The synchronizer circuit for triggering on triads of straw in the straw superlayer.

This has been a very productive year for the electronics R&D. Many circuits are now in the prototype stage and are ready for testing. The next step is to measure the high rate capabilities of the electronics and to confront the important details of chamber design such as proper straw resistance, proper wire attenuation, problems of capacitance, shielding and grounds.

Engineering R&D

Prototype Construction

Straw chamber prototypes have been built at Indiana University, Duke University, Boston University, and Princeton University. The problems of wire support and straw support have been solved in a number of different ways. At Duke a 25 straw system has been constructed. The straws were laid out and glued together on a flat grooved substrate. The straw length was 2.7 meters and the diameter was 4 mm. Measurements of the horizontal position in various rows show that the straws position for this configuration could be held to about 2 mils. This same system was instrumented and run at high voltage successfully. There is an ongoing program to study ways to accurately layout and glue the straws to the support cylinders in this hybrid scheme. A large prototype full length cylinder of 0.8 meter radius is being worked on. At Princeton University there is also work on building large structures of 7 mm diameter straws for a BCD experiment. Several straw clusters have been constructed and a novel method of pressurizing the straws to handle them has been worked out.[17] At Indiana University a 6 straw 3.6 meter long assemble was tested with electronics from University of Pennsylvania and attenuation in the system measured.[18] The major work at Indiana now, however, is the construction of modular arrays to hold the straws in position. A 64 straw module shown in Fig. 20 has been constructed and is now under testing. The support shell is 300 μ thick carbon fiber composite. The end plates have been designed to have very little material. The positioning of the straws and wires is accomplished by self centering of the wire supports within the shell. This wire support is shown in Fig. 21. It consisted of two identical molded pieces that snap together to form a cylinder with opposing V shaped passages at either end. It has the added advantage that the straw chamber can be strung after being assembled, or can be rewired if there is wire breakage.

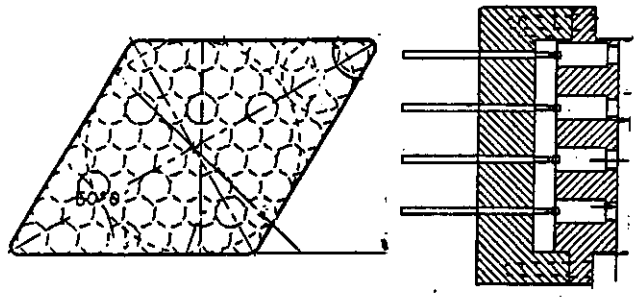

Fig. 20. Detail of the end and side view of a 64 straw module.

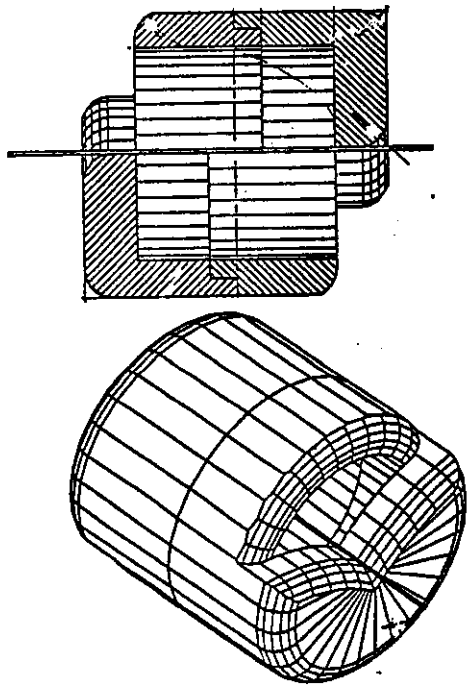

Fig. 21. Two view of a "double V" wire support.

Design Studies

Modular Tracker

All of the tracker engineering construction techniques are driven by the two somewhat incompatible considerations: First the amount of material must be kept small and second the straws and wires must be aligned with about 50 micron precision and be stable in that configuration.

The calculation of the radiation length versus eta for the SDC tracking system shows that in the region of the endplate of the central tracker there is more that 20% of a radiation length. It is difficult to reduce this significantly, since each superlayer has less than 1% of a radiation length for perpendicular traversals, and about 1/2 of this is from the straws themselves. The engineering challenge is to design a support system with 60-75 m tolerance with light weight materials. One support scheme that has been designed by Westinghouse[19] is shown in Fig. 22. The modules are held in position by a rigid support frame at three points. These frames have to only support the modules and not the wire tension, so they can be very light. They would be made from light weight carbon composites. Each module has a set of alignment pins that locate and hold it in position in the support disks. Four of the eight superlayers would be stereo layers. These are constructed by using the same modules as in the axial layers, but rotating them by 3 degrees. Modules could be assembled into the frame as the final operation after all electronics testing was complete and modules could be replaced in the case of accidental damage.

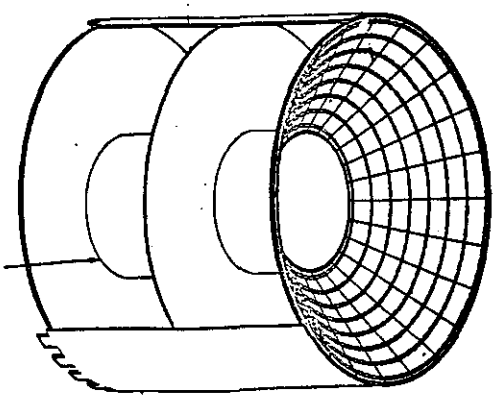

Fig. 22. An assembly drawing of one half of the modular drift chamber tracker showing the support system.

Hybrid Tracker

The hybrid central tracker is shown in Fig. 4. The design work on this tracker has been done at Oak Ridge National Laboratory.[20] In this concept the straws are supported on full length cylinders that are held on the ends by a cone and ring support. The details of the endplate with utilities are shown in Fig.23. This endplate must support wire tension for the entire cylinder, and also serve as the precision wire positioner. The amount of material in the support cylinder is comparable to the modular approach, however, there would need to be extra cylinders for the scintillating fiber layers. During this coming year both techniques will be designed in much more detail.The major R&D for reduction of material is in the endplates and utilities. This is being worked on at ORNL.

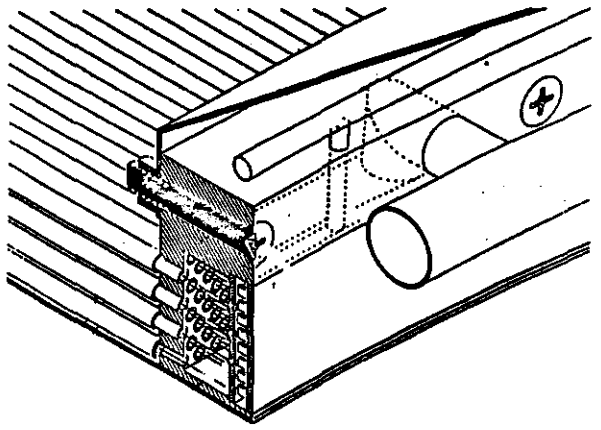

Fig. 23. Details of the endplate for the Hybrid design, showing utilities.

TRD Tracker

At CERN [21] there have been several very impressive tests of a straw tracking system coupled with TRD possibilities. A large array of straw tubes was tested in a CERN beam line to verify that the TDR tracking cell would give the resolution required by EMPACT. They found that using only the cell hits (and not drift time) they were able to achieve an position resolution of 0.4 mm. At Boston University a strawless detector is being developed.[22] The idea is to combine two foam molds with cylindrical depressions into a straw chamber. This has the advantage of low mass, ease of construction, and economy of handing. It may well be excellent solution to the short straw arrays required for EMPACT.

Intermediate Tracker

Radial Chamber

The intermediate tracker design is being worked on by several groups in the United Kingdom.[23] The design is based on the radial chambers being built for the H1 experiment at HERA. The details of the design are shown in Fig. 3. and Fig. 24. The present design involves 5 radial chambers position along the z axis. They each span a 50 cm to 150 cm radial space. Each has 300 azimuthal cells with a maximum drift distance of 15.7 mm. Within each module there are 8 layers of drift cells. The long drift times could be a problem at SSC where the bunch crossing is 16 ns., so a plane of tagging counters is placed in front of each radial chamber. These " bunch tagging counters" are shown in Fig. 25. The tagging counter time resolution is about three crossing times. This has been shown to be sufficient to result in good pattern recognition in the radial chamber. The R&D effort at present is concentrating on current draw in the voltage

grading resistors. Because of the higher currents in the chambers at SSC this could be a difficult problem. Also the Lorentz angle for the drift gas (CF4) must be measured[24]. This work is already underway and first results were presented at this conference. One of the primary advantages of the radial wire chamber is that the geometry matches the physics in the forward region and an excellent tracking system can be built with very few electronics channels. It is anticipated that the total channel count from both ends will be less than 50K. There is also an active design program on electronics for radial chambers at Rutherford Laboratory. Alternative devices such as microstrip chambers are also under study.

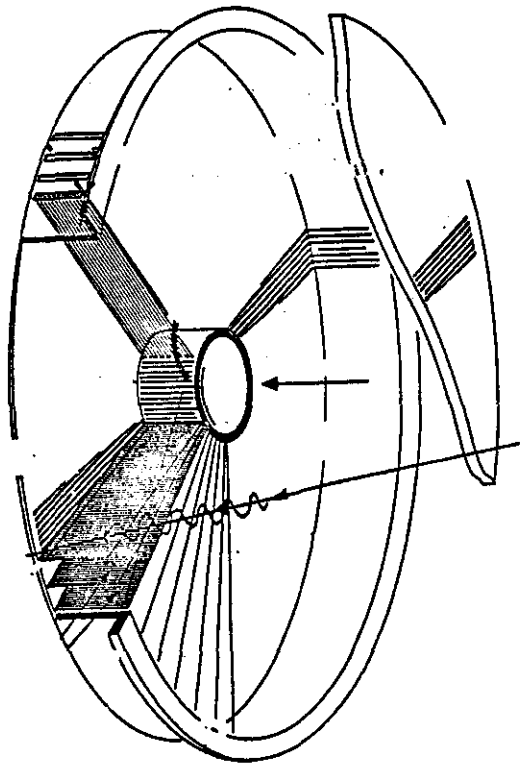

Fig. 24. Details of a radial wire chamber. The SDC version would have larger inner and outer radii and 300 sectors.

New Gaseous Chambers

In the intermediate region there have been a number of proposed detectors in addition to the radial wire chambers. Groups from Japan [25]and Texas[26] have been developing a new type of gaseous discharge chamber called the knife edge chamber with a signal and cathode structure printed on silicon. Reports from both groups were presented at this conference. In the case of the Texas design, an intermediate tracker has been proposed and the design started. Another technique being looked into at University of Rochester[27] is a resistive cathode drift cell. This scheme effectively uses a drift pad with hexagonal pads to fill the forward area. Each pad has a graded voltage for electron to drift toward the center pin where they avalanche. Scanning Tunneling Microscope points could be use for the discharge pins. Work is under way to design in intermediate tracker with such a system.

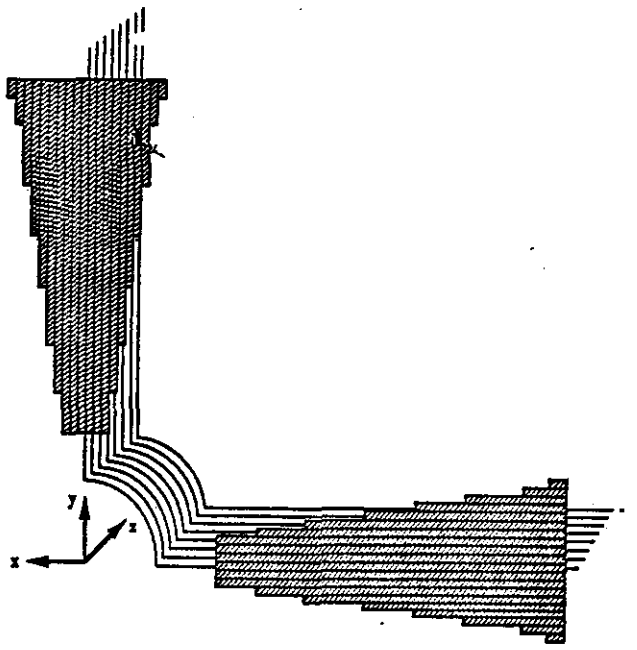

Fig. 25. Details of the bunch tagger counter which covers each sector and tags the proper bunch crossing time.

Summary

Wire chambers can play an important role at the SSC. Although straw drift chamber are a mature technique, there have been a number of innovations in straw drift chambers during the past year. All of the principle SSC detectors have been developing straw chambers and have concluded that such systems are feasible. The counting rates in the straws are high, but Monte Carlo studies indicate that tracking looks promising at and above design luminosity. The chamber lifetimes with CF_4 gases look very good.and radiation effects appear to be no problem at SSC for CF_4 gas mixtures.

In the intermediate region there is a radial wire chamber design under study and there are newer gaseous chambers that look promising.

Full scale tests are being planned to verify tracking at high rates and to confirm the triggering aspect of straw chambers.

[1] The members of the Wire tracking Subsystem group are Indiana University, University of Colorado, University of Pennsylvania, University of Liverpool, University of Glasgow, Rutherford Laboratory, KEK, Westinghouse Science and Technology Center, LBL and Oak Ridge National Laboratory.

[2] The members of the Hybrid Tracking subsystem are CBAF, Duke University, Florida State University, General Electric Canada, KEK, North Carolina State University, Northeastern University, Oak Ridge National Laboratory, Quantum Research Services, Supercomputer Calculations Research Institute, TRIUMF, and University of Pennsylvania.

[3] Asai- International Workshop on detectors for SSC, April, 1990, p260. The original plot was only for hit rate, which was scaled for the other parameters based on calculations at Indiana University.

[4] M. Corden, Proceeding of this conference. He predicts 17% at the first superlayer, and 3% at the final superlayer.

[5] W. Ford.and M Lohner "Track Reconstruction in Straw Superlayrs", Proceedings of this conference.

[6] C. Neyman, "Gain of a 3.65 m Straw Drift Tube", IUHEE-90-12.

[7] C. Lu "Investigations of a Single electrons' behavior in a proportional drift tube." Proceedings of this conference..

[8] J. Kadyk, J. Vavra. and J. Wise " Use of Straw tubes in High-Radiation Environments" Slac-pub 5306, and J. Kadyk,Proceedings of this conference.

[9] R.Henderson " Etching of Anode Wire Deposits with CF_4/Isobutane" Proceeding of this conference.

[10] W. Dunn " Radiation Damage Studies of Straw Tube and Scintillating Fiber components" Proceedings of this conference,

[11] B. Zhou " New Results on SSC Tracking Studies" WorkShop on Major SSC Detectors , Tuscon, Ar. ,Feb. 18,1990 ; S.Ahlen Private communication.

[12] H. Iwosaki " A time resolution study of Straw Chambers.". Kek, 89-158

[13] C. Neyman Attenuation Studies of 3.5 meter Straw Tubes" IUHEE-90-7 ; S. Oh, "Performance of a Prototype 3 meter Straw chamber", Proceedings of this conference.

[14] F. Newcomer et. al "A fast Monolithic Preamp and Shaper for High Rate Gas Tracking Detectors", Penn electronics Publication to appear in IEEE Trans. Nuclear Physics

[15] Y. Arai, "Development of TMC Chip and On-Chip Processing" " Proceeding of International Workshop on Solenoidal Detectors for the SSC, 1990 p 453.

[16] J. Chapman, " Synchronizer Development Update" , Proceedings of this conference.

[17] J. Armitage, "A Straw Tracking System", Proceedings of this conference.

[18] Ogren "Progress Report on 4 mm Straw chambers" International Workshop on Solenoidal Detectors for the SSC, 1990 p 302.

[19] R. Swensrud, " Design of a modular Straw tracking chamber", Proceedings of this conference.

[20] T. Ryan, " Design of the Hybrid Tracker and Utilities" Proceedings of this conference.

[21] V. Polychronakos "Particle Identification and Tracking with Transition Radiation Detectors", Proceedings of this conference.

[22] S. Whitaker, Private communication

[23] University of Liverpool, University of Glasgow, and Rutherford Laboratory are working on this design. D. Saxon " Forward Tracking with Enhanced Electron Indentification", Proceedings of this conference.

[24] J. Baily, " A measurement of the Electron Drift in Fast Gases" Proceeding of this conference.

[25] A.Maki, " The knife edge chamber R&D at KEK" , Proceedings of this conference.

[26] P. McIntyre, "Knife Edge chambers", High resolution tracking for he SSC detectors." Proceedings of this conference.

[27] Sills, "Advanced Field Shaping Drift Chambers for SSC Muon Tracking", Proceedings of this conference.