Fermilab Library
0 1160 0052549 7

SDC-90-00108

SDC
SOLENOIDAL DETECTOR NOTES

EFFECTS OF DEAD MATERIAL TO THE ELECTRO-MAGNETIC CALORIMETER AND ENERGY/RESOLUTION RECOVERY WITH "MASSLESS GAP"

Hideo Hirayama

October 1990

SDC-90-00108
JSD - NOTE - 1990 - 30

Effects of Dead Material to the Electro-Magnetic Calorimeter and Energy/Resolution Recovery with "Massless Gap"

HIDEO HIRAYAMA

KEK, National Laboratory for High Energy Physics 1-1 Oho, Tsukuba-shi, Ibaraki, 305 Japan

ABSTRACT

The various dead materials existing in front of the calorimeter affect both the energy and the energy resolution especially of electro-magnetic calorimeter. The possibility of the energy and energy resolution recovery with "massless gap" was studied by using EGS4 Monte Carlo code. Two types of massless gap were considered. The number of the massless gap is changed for the first type and the weight of different values are applied to the fixed massless gap for the second type. The results of both cases showed that the massless gap can recover both the energy and the energy resolution reasonably.

1. Introduction

Various dead materials are exist in front of the calorimeter in the real situation like a inner magnet or a construction material of the calorimeter itself. In some situation, the thickness of these dead materials becomes more than 5 radiation lengths. These materials affect to the energy output and the energy resolution especially of the electro-magnetic calorimeter. It is very important to recover the energy output and the energy resolution as good as possible. In this paper, I report the possibility of the energy output and the resolution recovery of the lead-liquid Ar calorimeter with "massless gap" by using the EGS4 Monte Carlo code[1] . "Massless gap" means the parts without the converter material. Aluminum of various thickness was used as the dead material. Two methods are studied. In the first way, several lead converters from the front of the calorimeter are replaced with liquid Ar but the energy deposition in the liquid Ar in this part is not included as the output. The relation between the number of converters replaced with the liquid Ar and the recovery of the energy or resolution is studied. In the second way, as the more practical method, two lead converters are replaced with G10 and the various weight are applied to this part to recover the energy and the energy resolution. These studies are mainly done for 50 GeV electrons. The dependence of the incident electron energy is also studied for the typical case.

2. Calculation Method

The electron gamma shower Monte Carlo code EGS4 is used to study the effect of the dead material and the recovery of the energy output and the energy resolution of the electro-magnetic calorimeter. The geometrical arrangements of two cases are shown in Figure 1 and Figure 2. In both cases, the dummy material of aluminum having a different thickness is put in front of the calorimeter. Electrons incident on the dummy materials with the angle θ to the normal. In the case 1, the several lead converters from the front are replaced with the liquid Ar. The energy depositions inside the liquid Ar which changes from the lead converter are not counted as the energy output. The effects of the

recovery are studies for the various thickness of the dummy material as the function of the number of the lead converter replaced with the liquid Ar. In the case 2, the two lead converters from the front are replaced with the 1.5-mm G10 plate and this part plays as the massless gap. The whole electromagnetic calorimeter is divided two parts after the massless gap as shown in Figure 2. In this study, however, the recovery by applying the weight to the massless gap was investigated. For this purpose, EGS4 outputs the energy depositions of the massless gap, EM1 and EM2 for each incident electron. The energy output and the energy resolution are calculated by using the EGS4 results by applying the different weight to the massless gap.

3. Results and Discussion

The effects of the dummy aluminum layer are shown in Figure 3 as the energy fraction in the front dummy layer having the different thickness and the various incident angle as the function of the incident electron energy. As the matter of course, the fraction increases drastically as the increase of the thickness and the decrease of the incident energy. More than 20 % of the energy is absorbed for the 5 radiation length of aluminum in the case of normally incident 50 GeV electrons.

The recovery of the energy resolution in case 1 is shown in Figure 4 as the function of the dummy Al layer thickness. For the same thickness of the dummy layer, the energy resolution is recovered as the increase of the replaced number at first but it becomes worse again from the some number. shown in the case of 3 radiation length dummy layer. The pulse height distribution of 50 GeV electrons with the 5 radiation length dummy layer is shown in Figure 5 for without the massless gap and the 12 layers replacement together with that for without the dummy layer. The recovery of the energy resolution can be seen clearly. The energy output with the 5 radiation length dummy layer for 0 and 30 degree incident is shown in Figure 6 when the 12 layers are replaced for the 0 and 30 degree incident. At 50 GeV, the energy output is smaller about 25 % than that without the dummy layer but generally the energy output is

recovered well from 10 to 150 GeV. From the results above, it seems possible to recover the energy output and the energy resolution with the massless gap.

As the more realistic way, the recovery of the output energy and the energy resolution for 50 GeV electrons in the case 2 is shown in Figure 7 as the function of the weight of the massless gap in the case of the 3 or 5 radiation length dummy layer of normal incident and the 2 radiation length of 30 degree incident. The weight that gives the same energy output without the dummy layer gives the energy resolution very close to the best one. The weight dependence of the energy resolution is similar to the number dependence of the lead converter replaced with the liquid Ar in the case 1. The pulse height distribution of 50 GeV electrons with the 5 radiation length dummy layer is shown in Figure 8 both with the weight 1 and 5.4 together with that without the dummy layer. The energy resolution and the energy output is recovered well with the weight to the massless gap. The variation of the applied weight to give the same output energy for 50 GeV electrons is shown in Figure 9 for the normal incident and the 60 degree incident. The weight must be applied increases with the increase of the dummy layer thickness. For the same thickness of the dummy layer, the larger weight is needed for the 60 degree incident. The incident electron energy dependence of the corrected energy resolution is shown in Figure 10 in the form of (σ/E_{ab}) x $E^{1/2}$. The large values at 10 and 20 GeV shows the difficulties of the recovery by this method. The increase above 50 GeV shows that the energy resolution has the constant term and can be expressed as follows above 50 GeV if the same weight is applied for all incident energy.

$$\sigma/E_{ab} = 16.7E^{-1/2} + 1.31(\%)$$

In Figure 10, the values obtained with the weight to the massless gap giving the best energy resolution at each incident energy are also ahown together with the applyed weight. The energy output with the weight 5.4 to the massless gap for the 5 radiation length dummy layer is shown in Figure 11. Maximum differences of the output energy from that without dummy layer is 13 % from 10 to 150 GeV and the degree of the recovery is better than the case 1.

4. Conclusion

The effects of the dead materials to the electromagnetic calorimeter and the recovery of the output energy and the energy resolution with the massless gap are studied by using the EGS4 Monte Carlo code. Two types of the massless gap were considered. At first type, the number of the massless gap is changed. The fixed 2 layer was used at the second type but the weight of different values to the massless gap was applied. The results of both case showed that the massless gap can recover both the output energy and the energy resolution reasonably. Before applying this method to the practical electromagnetic calorimeter, it is desired to check the above results with the experiment.

REFERENCES

1. W. R. Nelson, H. Hirayama and D. W. O. Rogers, "The EGS4 Code System", SLAC-265 (December 1985).

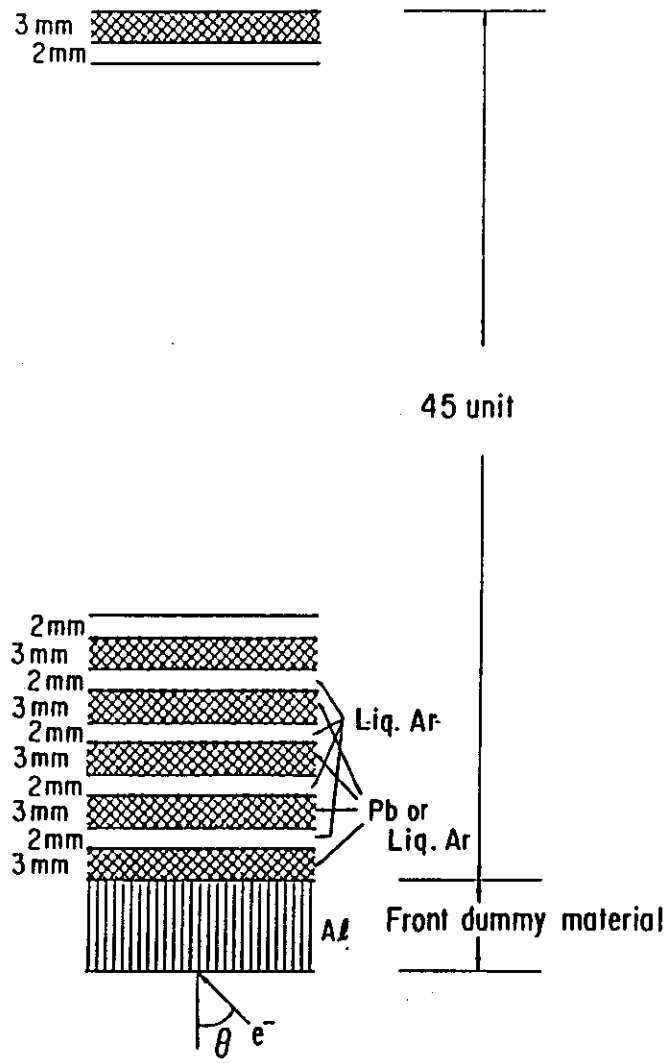

Figure 1 The geometrical arrangement of case 1.

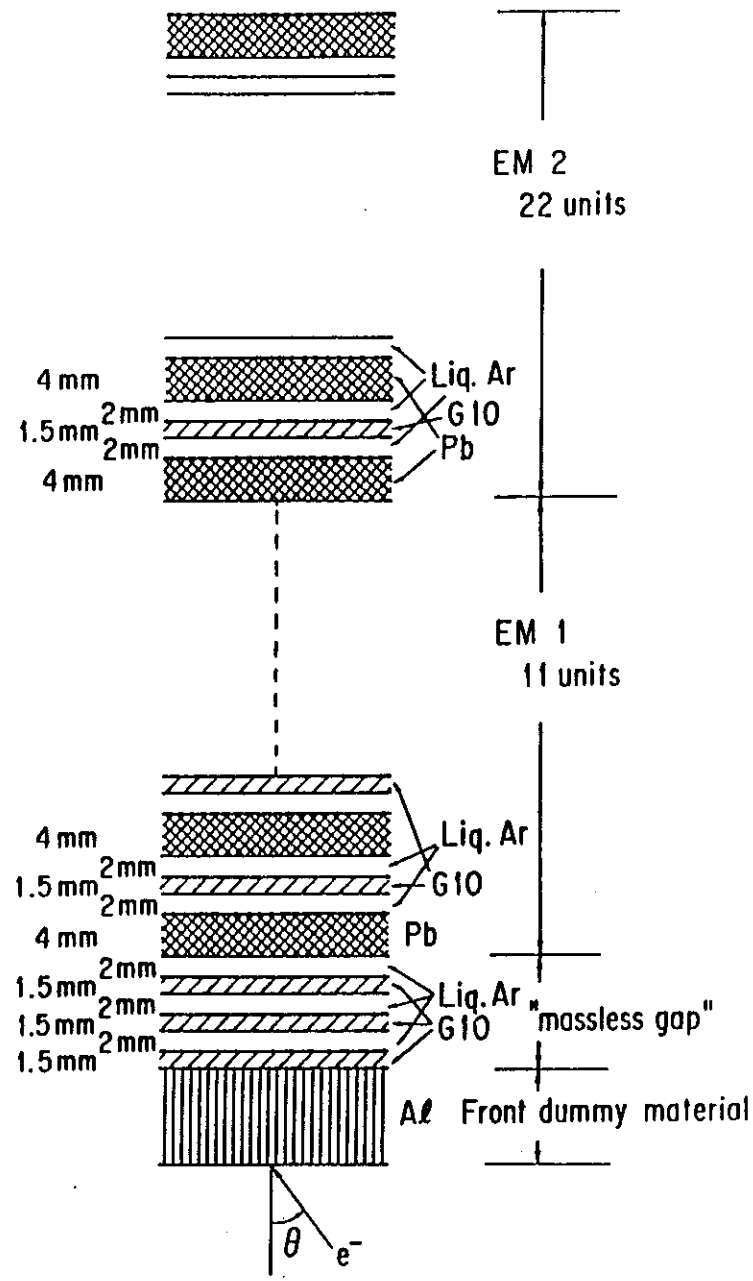

Figure 2 The geometrical arrangement of case 2.

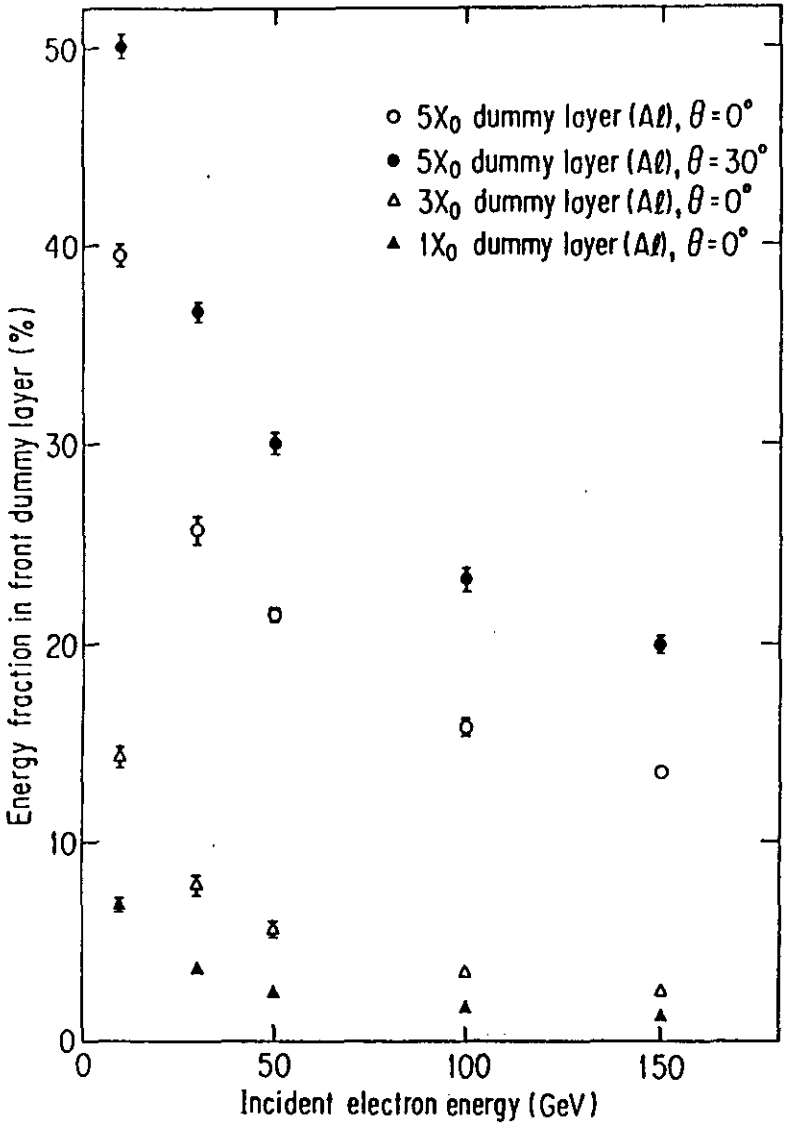

Figure 3 The energy fraction in the front dummy layer having the different thickness and the various incident angle as the function of the incident electron energy.

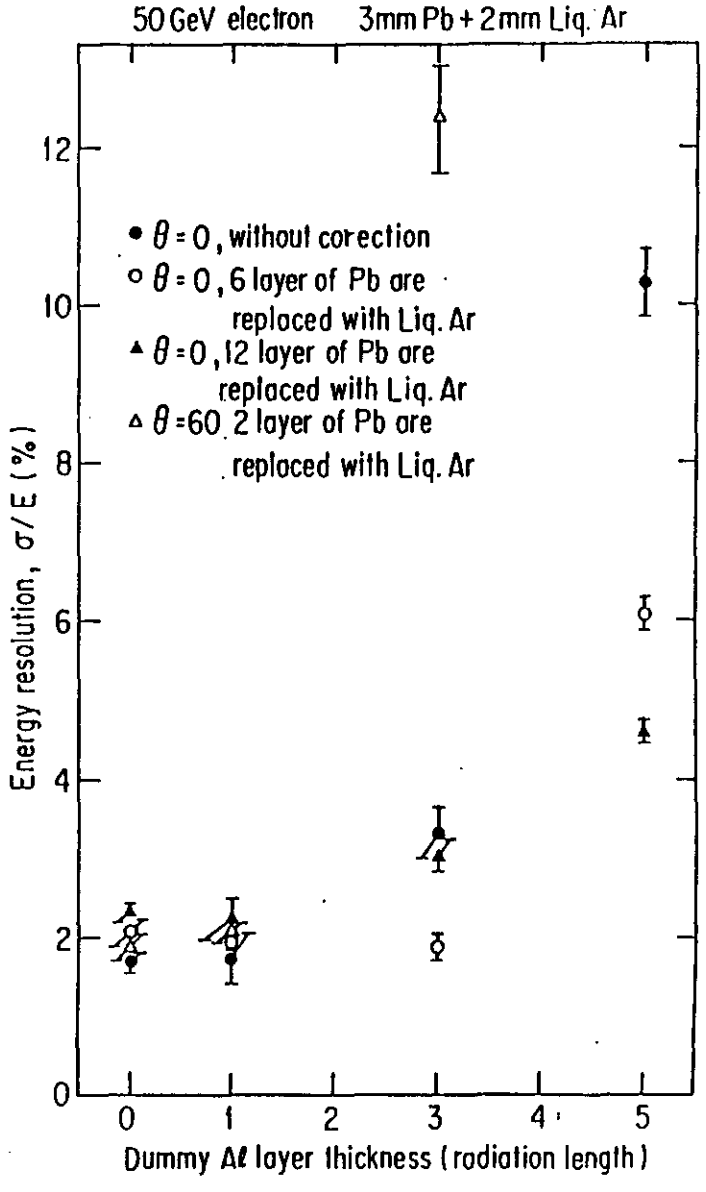

Figure 4 The recovery of the energy resolution in case 1 function of the Al dummy layer thickness.

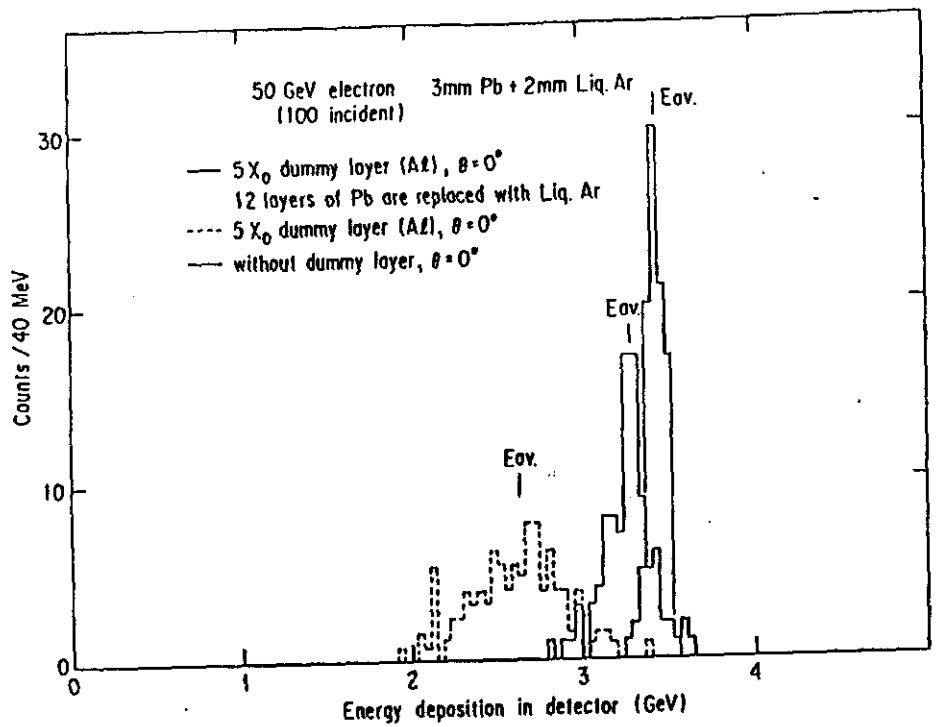

Figure 5 The pulse height distribution of 50 GeV electrons with the 5 radiation length dummy layer for without the massless gap and the 12 layers replacement together with that for without dummy layer.

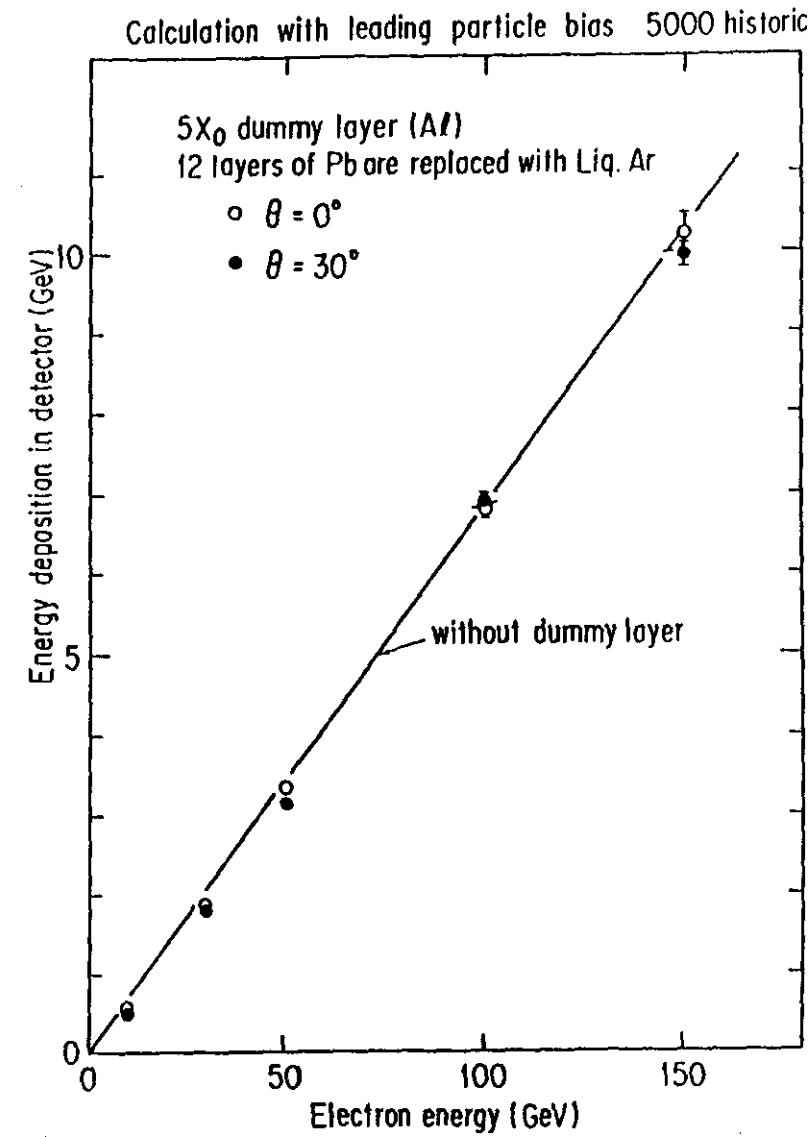

Figure 6 The energy output for the 5 radiation length dummy layer when the 12 layers are replaced for 0 and 30 degree incident as the function of the incident electron energy.

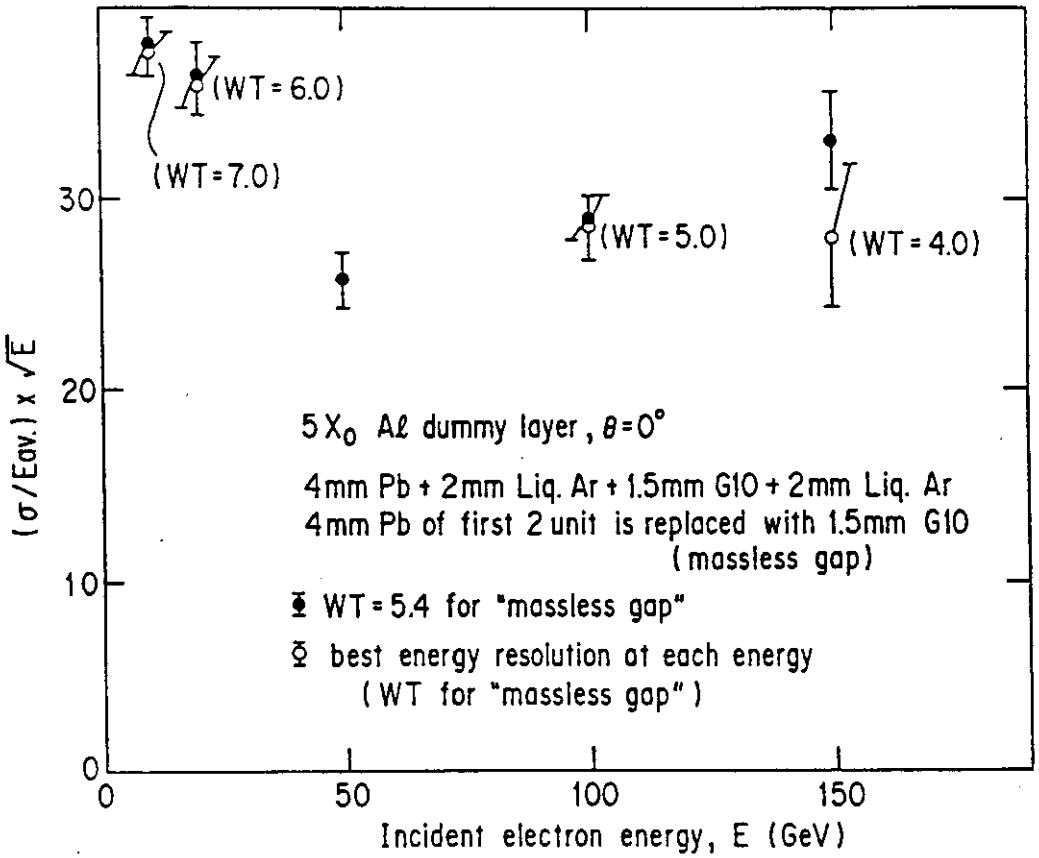

Figure 9 The incident energy dependence of the corrected energy resolution with the 5 radiation length dummy layer.

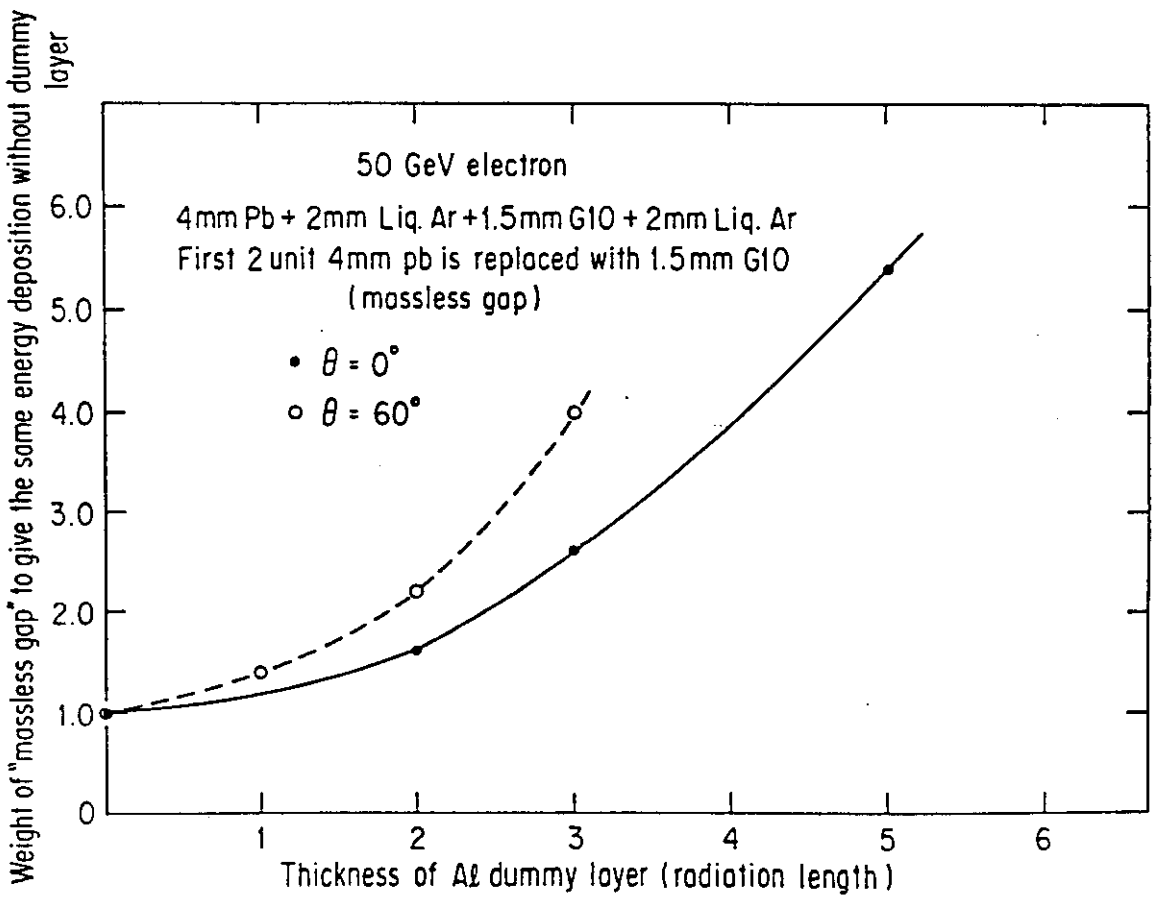

Figure 10 The variation of the applied weight to give the same output energy for 50 GeV electrons for the normal incident and the 60 degree incident.

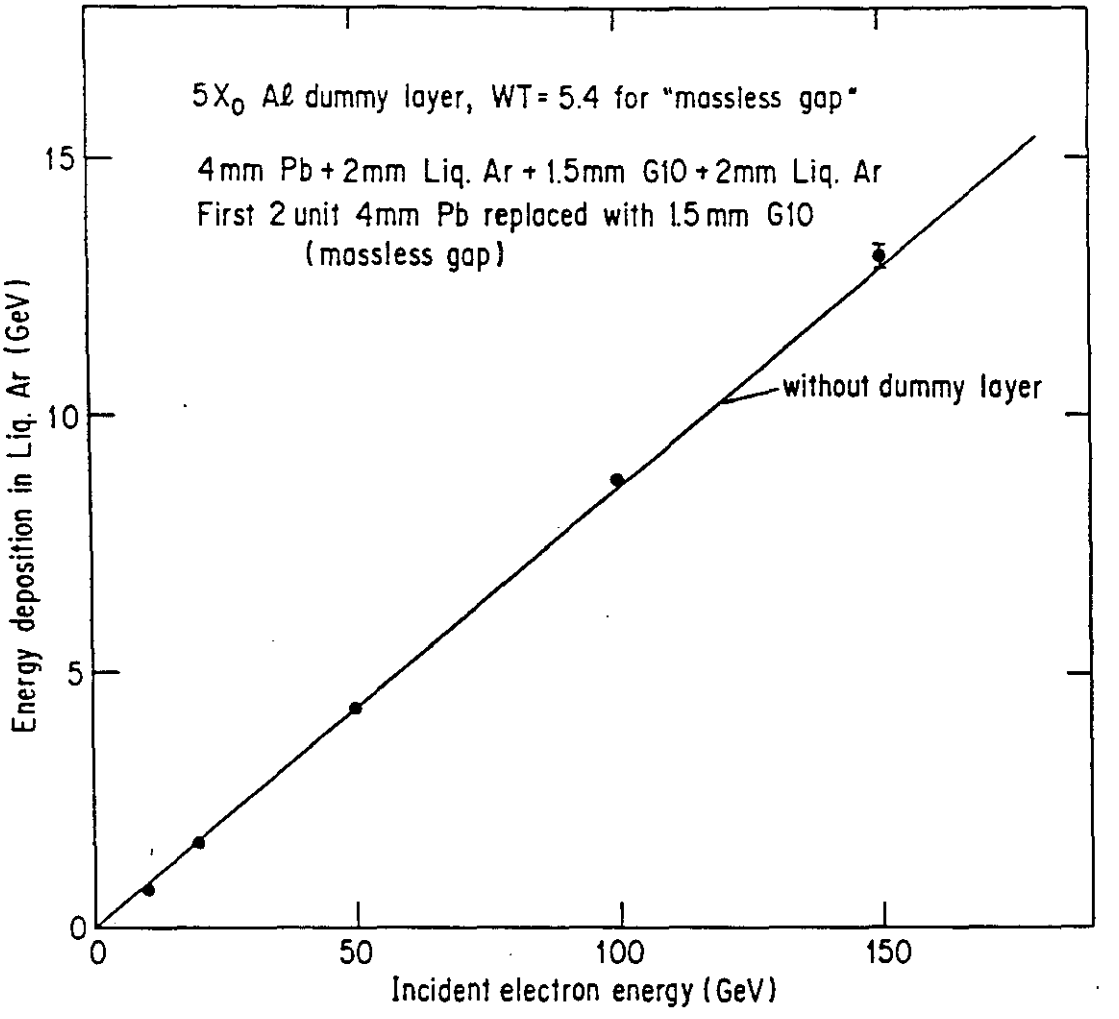

Figure 11 The energy output with the weight 5.4 to the massless gap for the 5 radiation length dummy layer.