Fermilab Library
0 1160 0052542 2

SDC-90-00101

# SDC
# SOLENOIDAL DETECTOR NOTES

## FLUX JUMPING IN THE RTK OCTAGONAL MUON TOROID

Jim Bensinger

October 1990

# Flux Jumping in the RTK Octagonal Muon Toroid

*Jim Bensinger*
*Brandeis University / SSCL*

A design for a barrel muon toroid has been created by members of the SDC[1] working with the engineers of RTK[2]. In this design the central barrel toroid, as shown in figure 1, is constructed in layers 6 inches thick. Each layer is made of eight trapezoid shaped pieces of 1010 steel arranged in short and long lengths. Individual pieces are shown in figure 2, with an assembly and bolting scheme shown in figure 3. The flux crosses the gaps between these plates at eight different places around each layer of the toroid. The placement of this gap is different in neighboring layers, as can be seen in figure 3. To establish manufacturing tolerances we have to know the effect these gaps have on our ability to measure muon momenta. In particular, would flux jumping to neighboring steel layers deplete the field in the neighborhood of the gap by an amount sufficient to have a significant effect on muons whose flight path took them through the gap. Such a trajectory is shown in figure 4.

To answer this question we established a 2-D model of the toroid gap and calculated the magnetic field in the model using the finite element program PE2D[3]. The 2D equivalent problem is shown in figure 5. The muon trajectory shown in figure 4 corresponds to the series of •'s in figure 5. In this 2D model, distance from the gap corresponds to distance measured parallel to the field lines in the real toroid.

No gaps were assumed between neighboring layers of the toroid. It is expected that a high friction (non-magnetic) paint will be used between layers of the toroid giving an actual gap of 3 to 5 mils. The existence of this gap will probably reduce the flux jumping and strengthen the conclusions of this note, but this effect is neglected here. This will have to be verified in a future work.

## Description of Method

The arrangement of material used in the program is shown[4] in figure 6. Making use of the symmetries of the magnet model we only simulate the upper left quadrant of figure 5; the remainder of the field is a reflection of the field produced in the quadrant simulated. The mesh generated is shown in figure 7. The current density in the coil was adjusted so that the field just inside the coil (X=.8m, Y=.4m) is 1.8 Tesla. A gap size of 1 cm was used and different gap sizes were simulated by varying the permeability of the air in the gap. For instance a 1 mm gap was generated using a permeability of 10 for the air in the gap.

---

1 D. Bintinger, J. Bensinger, and R. Kadel; "A Detector Design", International Workshop on Solenoidal Detectors for the SSC", KEK April, 1990.

2 'RTK' a joint venture: Kaiser Engineers Inc., Tudor Engineering, and Keller & Gannon-Knight.

3 Developed by Rutherford Appleton Laboratory and marketed by Vector Fields Limited.

4 It should be noted that the path length of the flux in the steel is only about half of the length of an average piece of steel in the detector, so the reluctance of the gap vs that of the steel is twice what it would be in the actual of toroid.

To determine permeability, the B vs H curve for 1010 steel was used. This curve is shown in figure 8

## Results for 1 mm Gap

Once the field was generated, the magnetic field for the trajectory shown in figure 4 was calculated for various locations in the gap and in the neighboring steel. The trajectories are at X=.70, .76, .82, .83, .86, .89. The gap runs from X=.825 meter at one edge to X=.90 meter at the gap center. There are two curves through the center of the gap, two on either side of the edge of the gap, and two in the steel. It should be noted that the field deviation is largely confined to a region of about 10 cm on either side of the gap. Since the muon trajectory is at a large angle to the gap, this deviation will influence only a small fraction of the muon's path. Thus it will have limited effect on the $\int B \cdot dl$ of the muon.

The magnetic field lines for the 1 mm gap are shown in figure 10. The integrals of the field were calculated along the indicated trajectories in figure 9 and compared to the field integrals for the situation where there is no gap. The results are given in the following table.

Table 1
Field deviations for a 1 mm gap.

| X Position of Gap | Deviation from "No Gap" $\int B \cdot dl$ |
|---|---|
| .89 m | -1.4 % |
| .86 m | -1.5 % |
| .83 m | -2.0 % |
| .82 m | .4 % |
| .76 m | .14 % |
| .70 m | .14 % |

## Results for 1 cm Gap

Similar calculations were performed for a 1 cm gap. The magnetic field along the same set of trajectories as used before are shown in figure 11. The magnetic field lines for a 1 cm gap are shown in figure 12. As above the integrals of the field were calculated along the indicated trajectories in figure 11 and compared to the field integrals for the situation where there is no gap. The results are given in the following table.

Table 2
Field deviations for a 1 cm gap.

| X Position of Gap | Deviation from "No Gap" $\int B \cdot dl$ |
|---|---|
| .89 m | -3.7 % |
| .86 m | -3.6 % |
| .83 m | -3.7 % |
| .82 m | .9 % |
| .76 m | 1.0 % |
| .70 m | 1.2 % |

These results are not as sizable as one might *a priori* expect for two reasons. As mentioned above the field deviation affects only a fraction of the muon's trajectory and because the steel is not yet in full saturation. When the magnetic field strength is reduced in steel, the permeability increases, keeping up the magnetic flux density. The permeability near the gap for the case of a 1 cm gap is shown in figure 13.

## Conclusions

It appears that "flux jumping" will not have a significant effect on the muon trajectories, even for substantial gaps of up to 1 cm. This has only been tested, however, on an idealized model and should be recalculated on a more realistic model before actual construction.

---

## Figure Captions

1 Isometric view of the octagonal muon toroid in the RTK design.

2 Plates used in the design of the barrel muon toroid. Each plate is 6 inches (150 mm) thick.

3 Assembly drawing of the barrel muon toroid showing bolting patterns and gap locations.

4 Trajectory of muon from the interaction point through a gap in the muon toroid.

5 2-D model used in magnetic field calculation.

6 Material arrangement for magnetic field calculation.

7 Mesh used for magnetic field calculation.

8 B (Tesla) vs H (Amp/meter) for 1010 steel.

9 Magnetic field along muon trajectories for a 1 mm air gap. The gap runs from X=.825 meter at one edge to X=.90 meter at the center.

10 Magnetic field lines for 1 mm gap.

11 Magnetic field along muon trajectories for a 1 cm air gap. The gap runs from X=.825 meter at one edge to X=.90 meter at the center.

12 Magnetic field lines for a 1 cm gap.

13 Permeability of steel with a 1 cm gap.

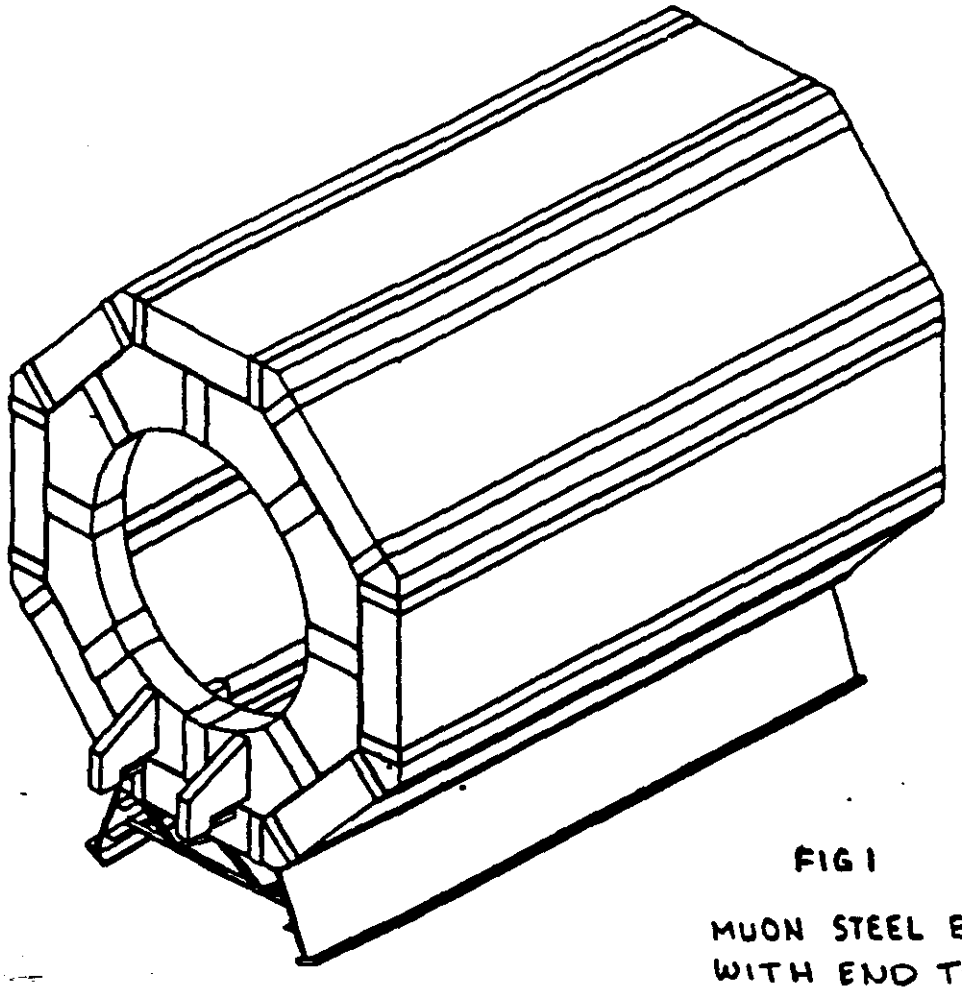

FIG 1

MUON STEEL BARREL
WITH END TOROID

Fig. 2

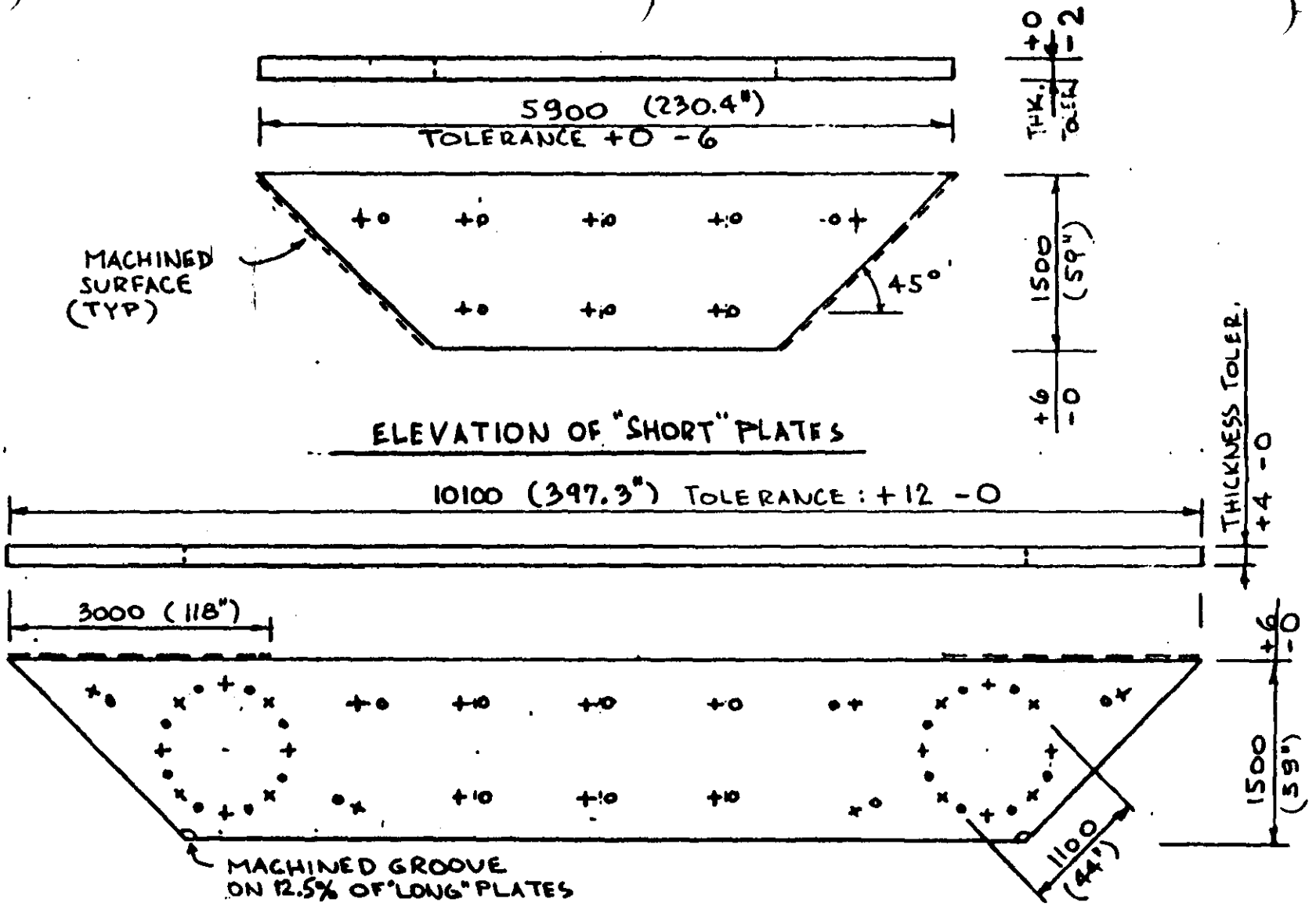


EOI TYPE S SOLENOID
MUON STEEL PLATES

NOTE: 12% OF THE PLATES WILL BE DRILLED WITH RECESSED 2"ϕ HOLES SHOWN THUS : + AND o
44% OF THE PLATES WILL BE DRILLED WITH STANDARD 2"ϕ HOLES SHOWN THUS: + , AND THE REMAING 44% WITH STANDARD 2"ϕ HOLES SHOWN THUS : o

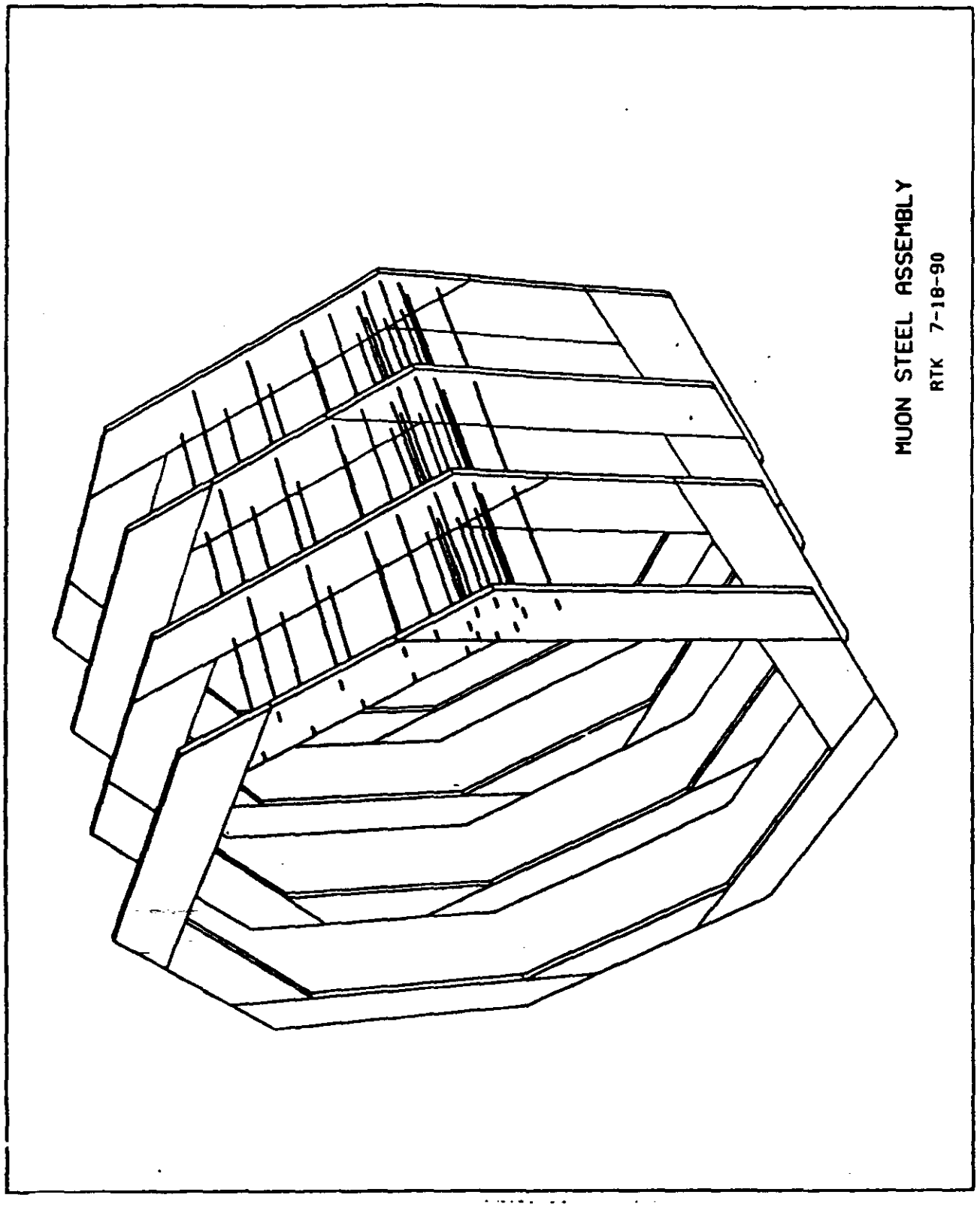


Fig. 3

EOI TYPE S SOLENOID
MUON STEEL PLATES

# Figure 4

**Particle trajectory for "flux jumping" study.**

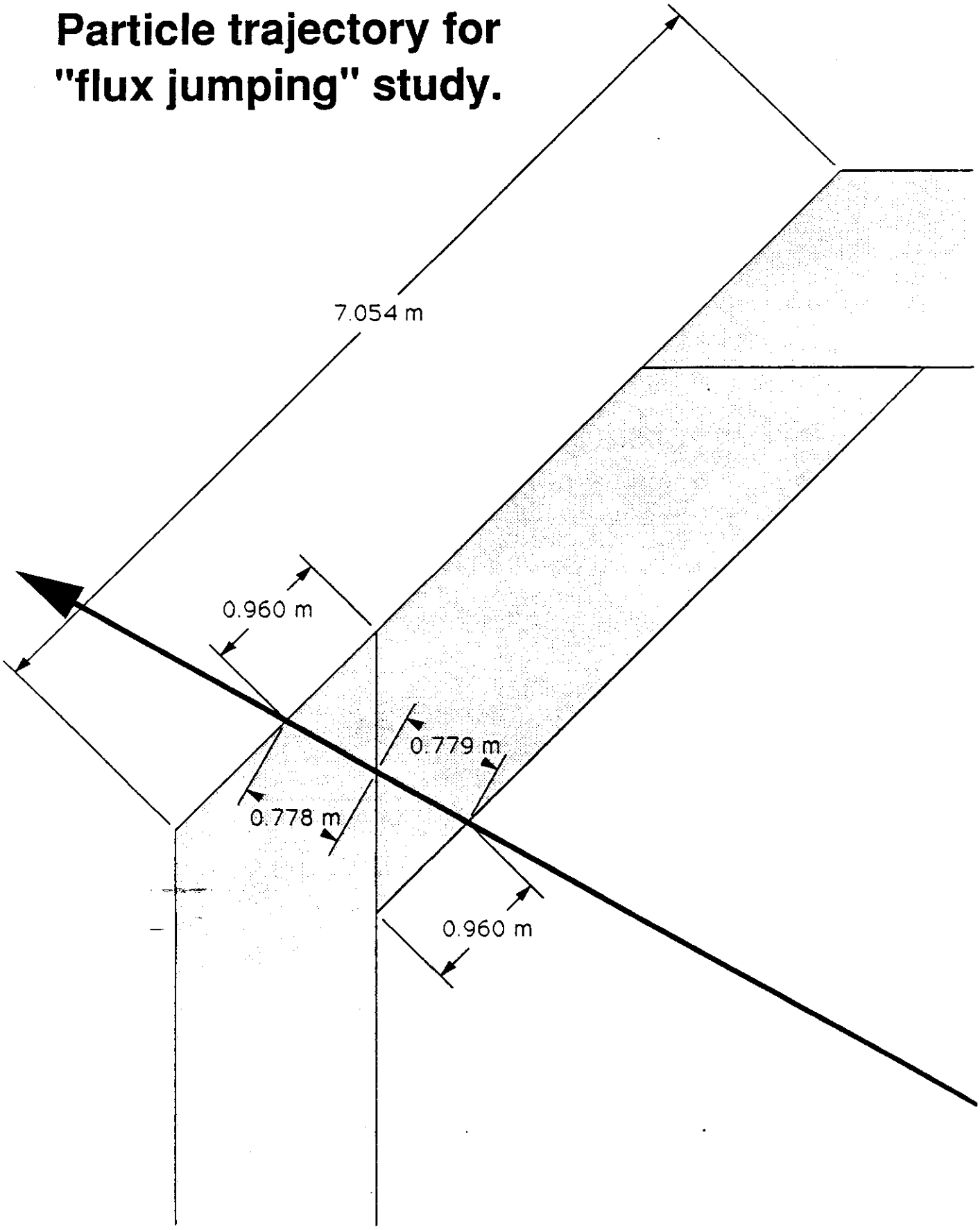

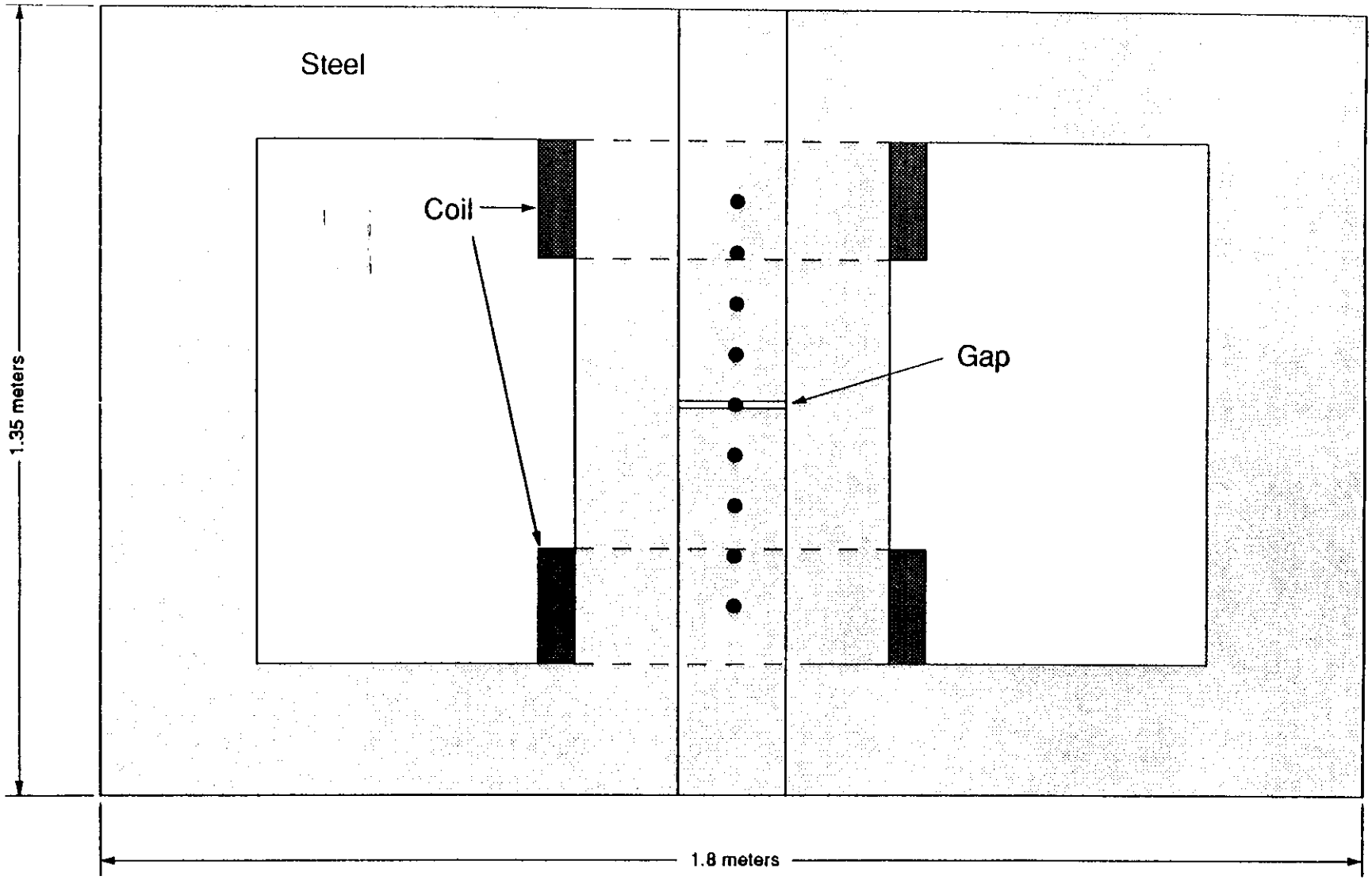


Figure 5

Iron design for magnetic field simulation.
Muon trajectory in the previous figure is shown as a series of dots.

Figure 6
Material Distribution for Magnetic Field Calculation

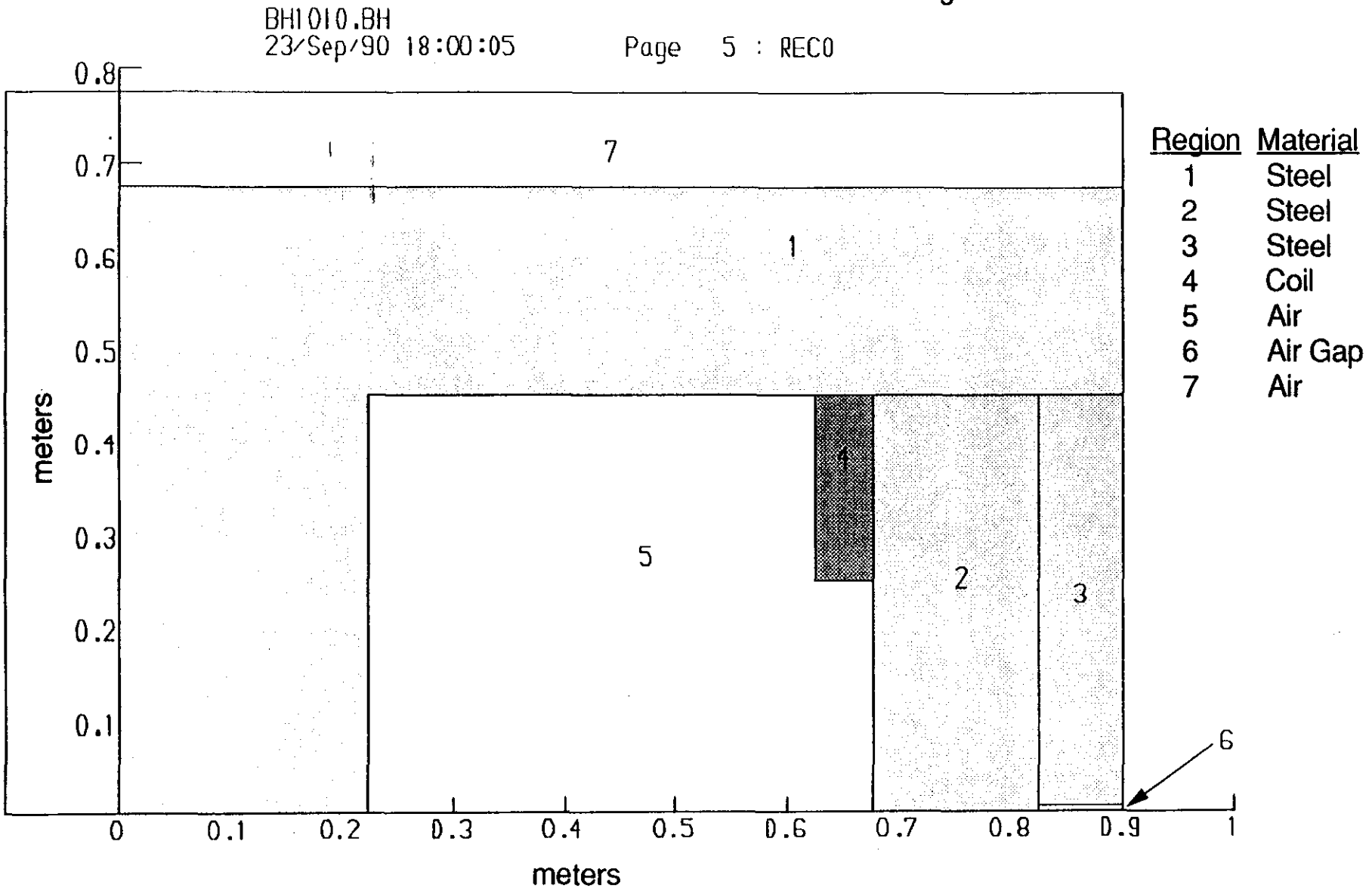


ELEM=LINE SYMM=XY SOLN=AT FIEL=MAGN
No Mesh 7 Regions

VF/PE2D.8

Figure 7 Mesh for Magnetic Field Calculation

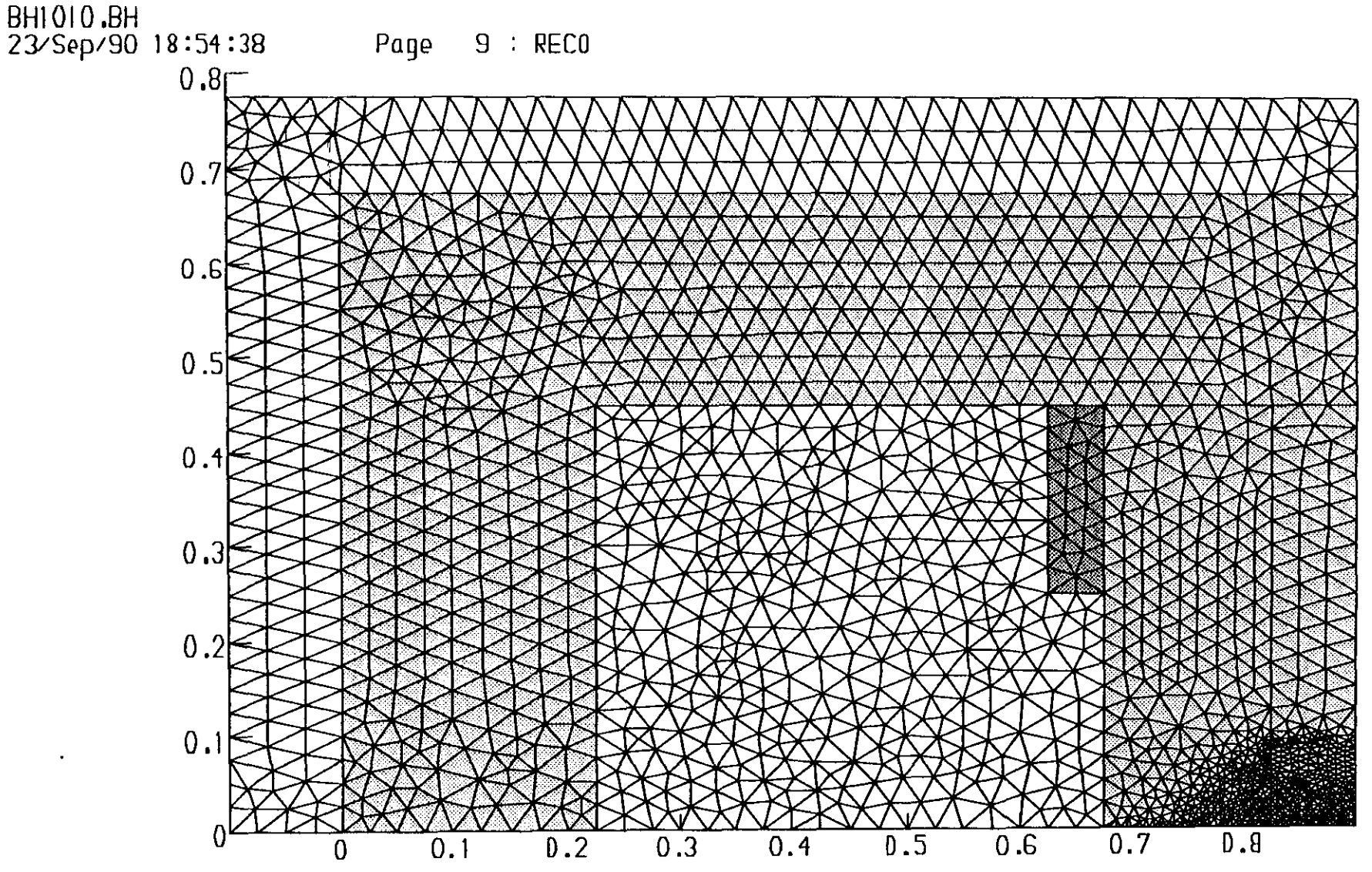


FLEM=LINE SYMM=XY SOLN=AT FIEL=MAGN
h 3586 Elements 7 Regions

VF/R 0.8

Figure 8

BH1010.BH
3/Sep/90 11:25:09 Page 4 : LOAD BH1010

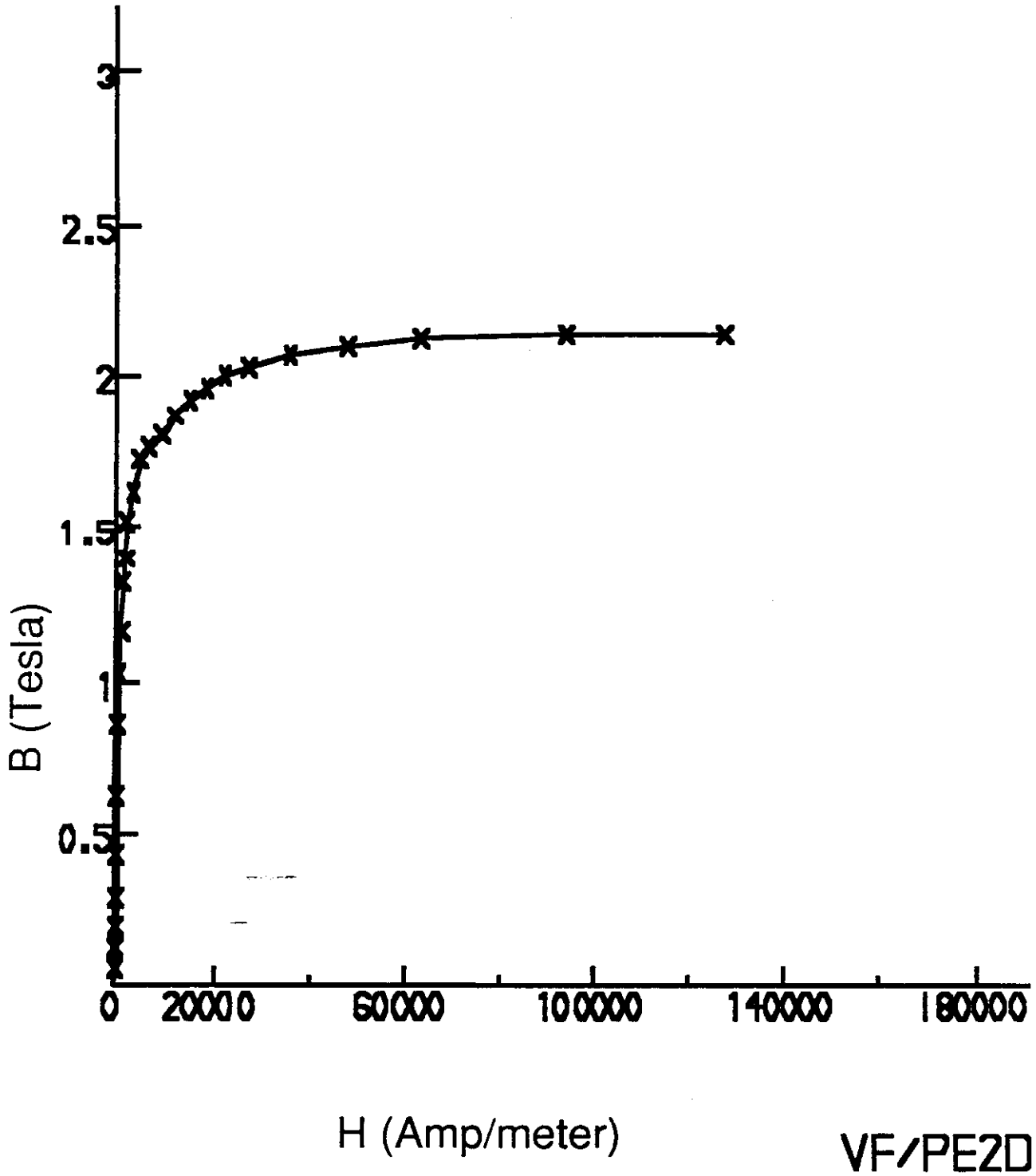


VF/PE2D.8

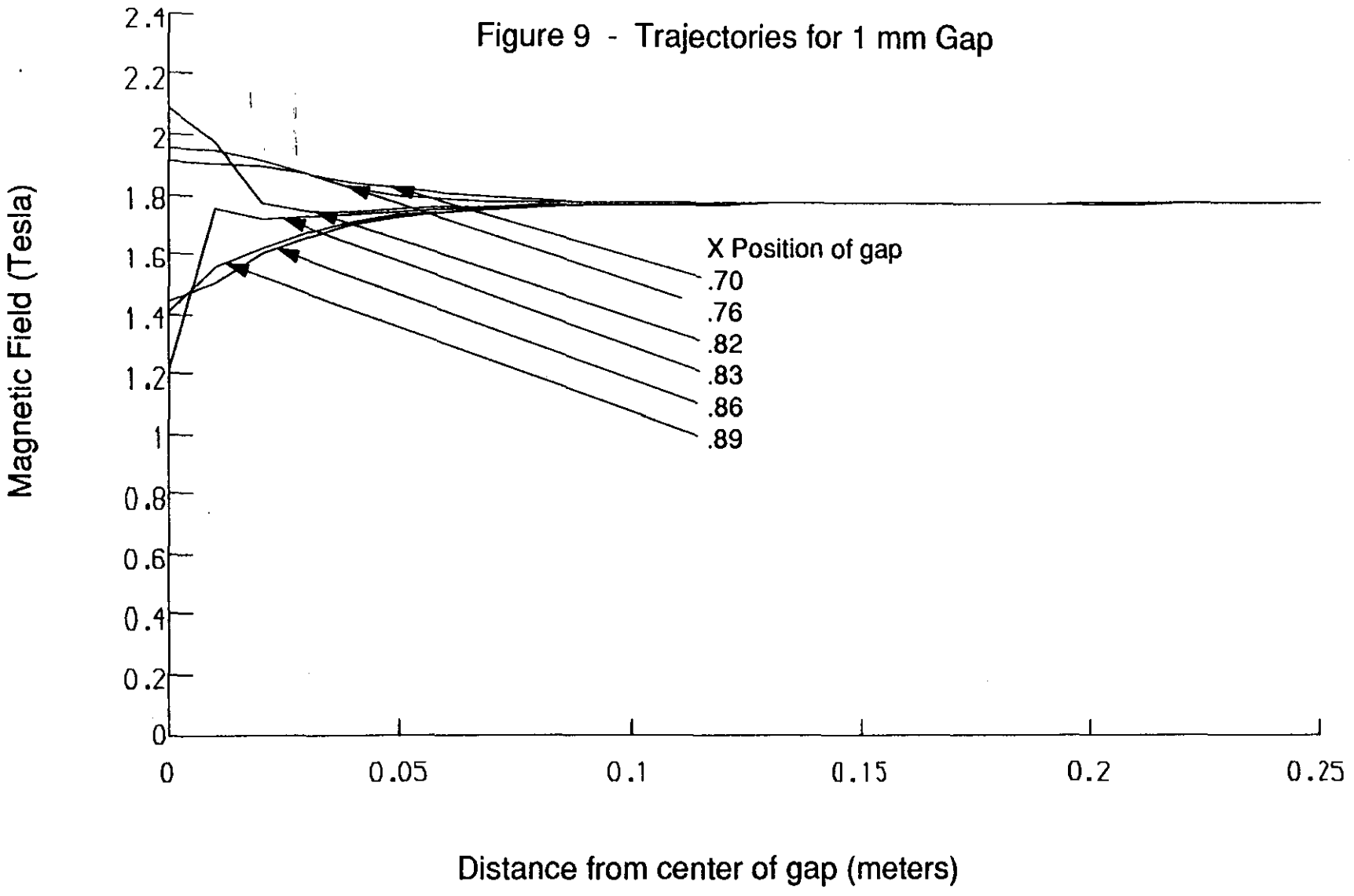
Figure 9 - Trajectories for 1 mm Gap
Magnetic Field (Tesla)
2.4
2.2
2
1.8
1.6
1.4
1.2
1
0.8
0.6
0.4
0.2
0
0
0.05
0.1
0.15
0.2
0.25
Distance from center of gap (meters)
X Position of gap
.70
.76
.82
.83
.86
.89

VF/PE2D.8

Figure 10 Magnetic Field for 1 mm Gap.

TOROID_GAP_3.RES
28/Sep/90 14:13:49 Page 4 : RECO 0 .95 0 .8 +ERAS -LABE

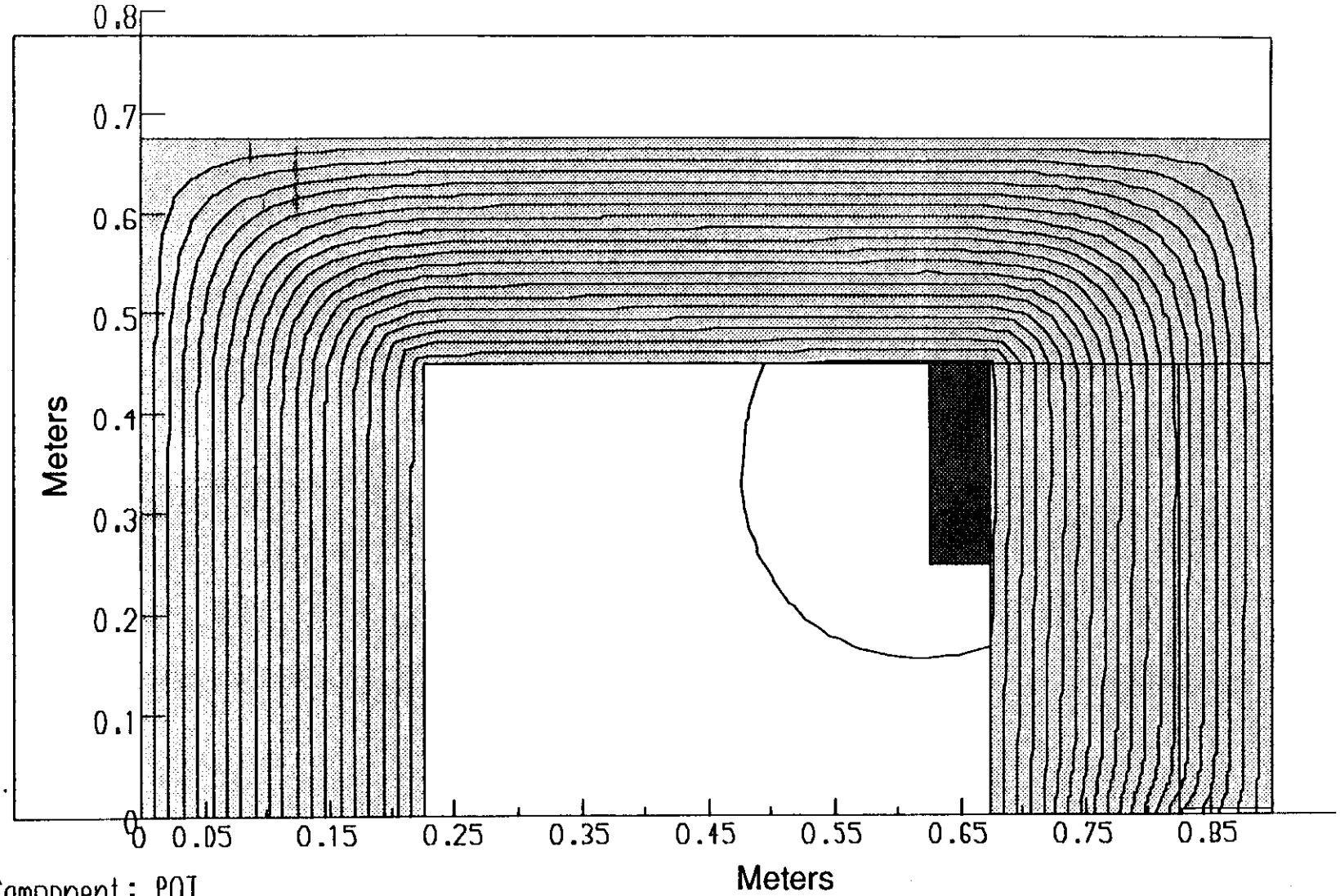


Component: POT
Minimum: 0, Maximum: 0.4, Interval: 0.02

ELEM=LINE SYMM=XY SOLN=AT FIEL=MAGN
Static Solution Mesh 4350 Elements 7 Regions

VF/PE2D.8

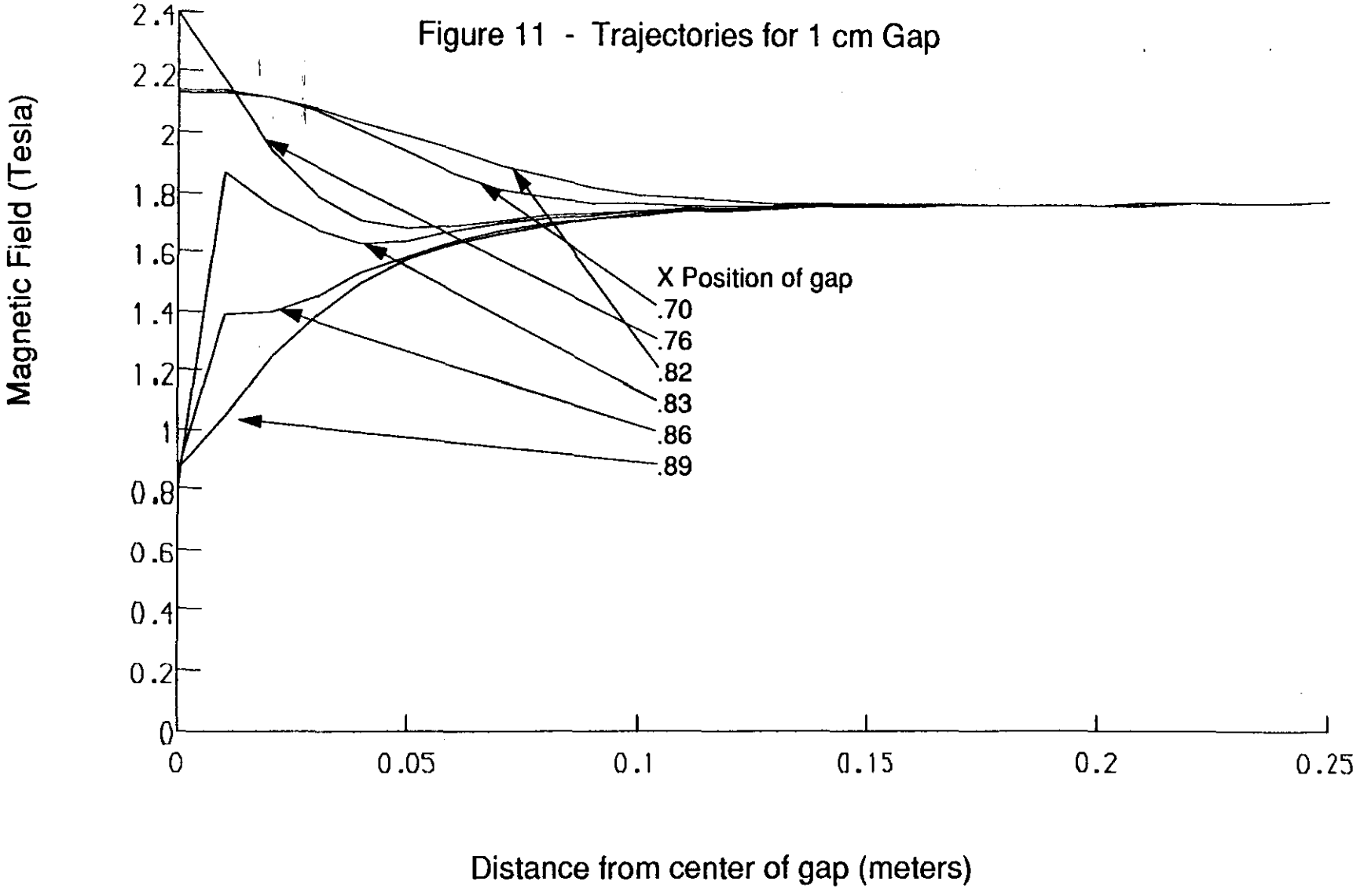
Figure 11 - Trajectories for 1 cm Gap
Magnetic Field (Tesla)
2.4
2.2
2
1.8
1.6
1.4
1.2
1
0.8
0.6
0.4
0.2
0
0
0.05
0.1
0.15
0.2
0.25
X Position of gap
.70
.76
.82
.83
.86
.89
Distance from center of gap (meters)

TOROID_GAP_2.RES
30/Sep/90 11:45:36 Page 2 : RECO 0 .95 0 .8

# Figure 12 - Magnetic Field for 1 cm Gap

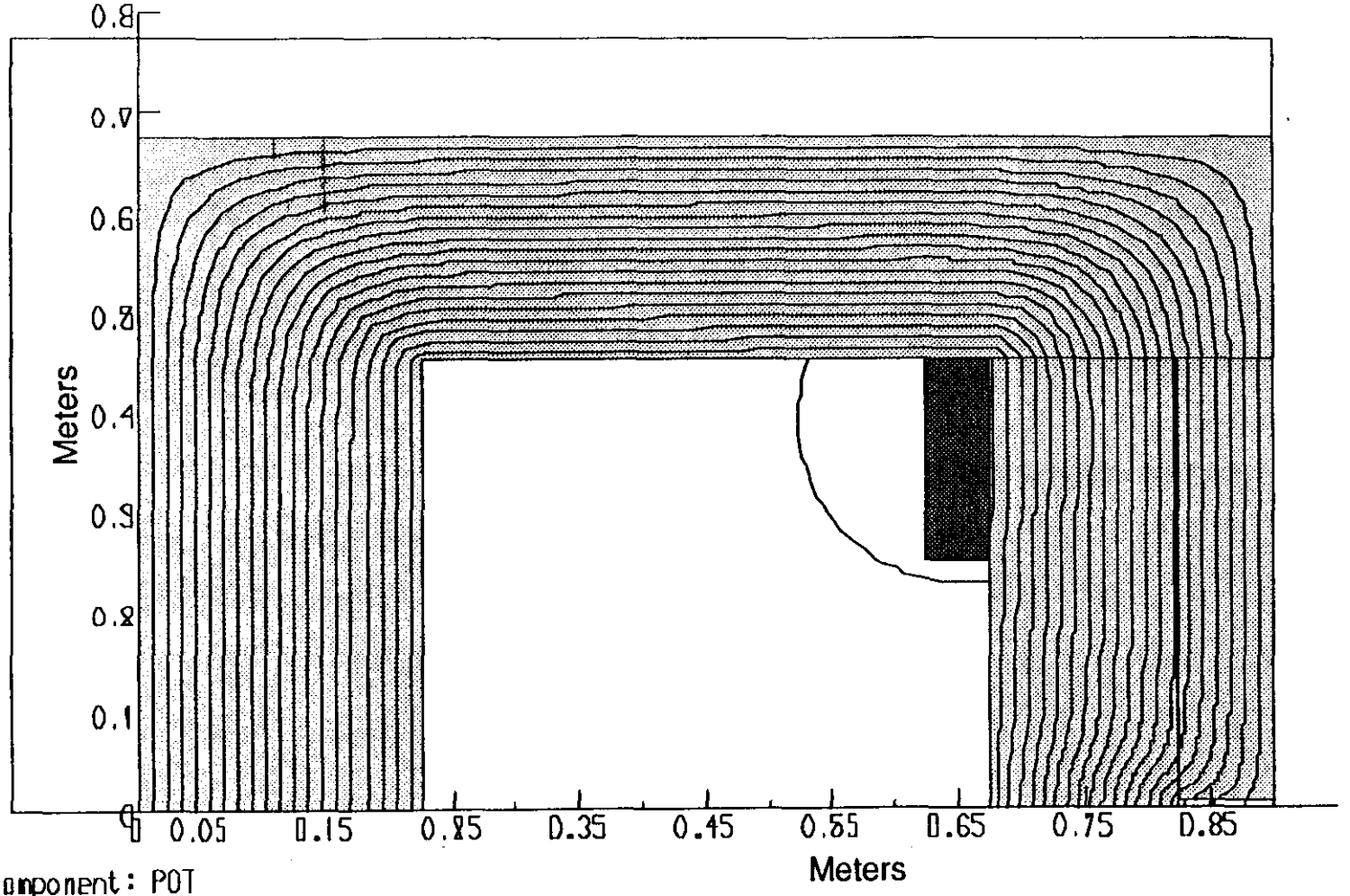


Component: POT
Minimum: 0, Maximum: 0.4, Interval: 0.02

ELEM=LINE SYMM=XY SOLN=AT FIEL=MAGN
Static Solution Mesh 4350 Elements 7 Regions

VF/PE2D.8

TOROID_GAP_2.RES
1/Oct/90 15:06:32 Page 9 : RECO 0 1 0 .8

Figure 13 - Permeability for 1 cm Gap

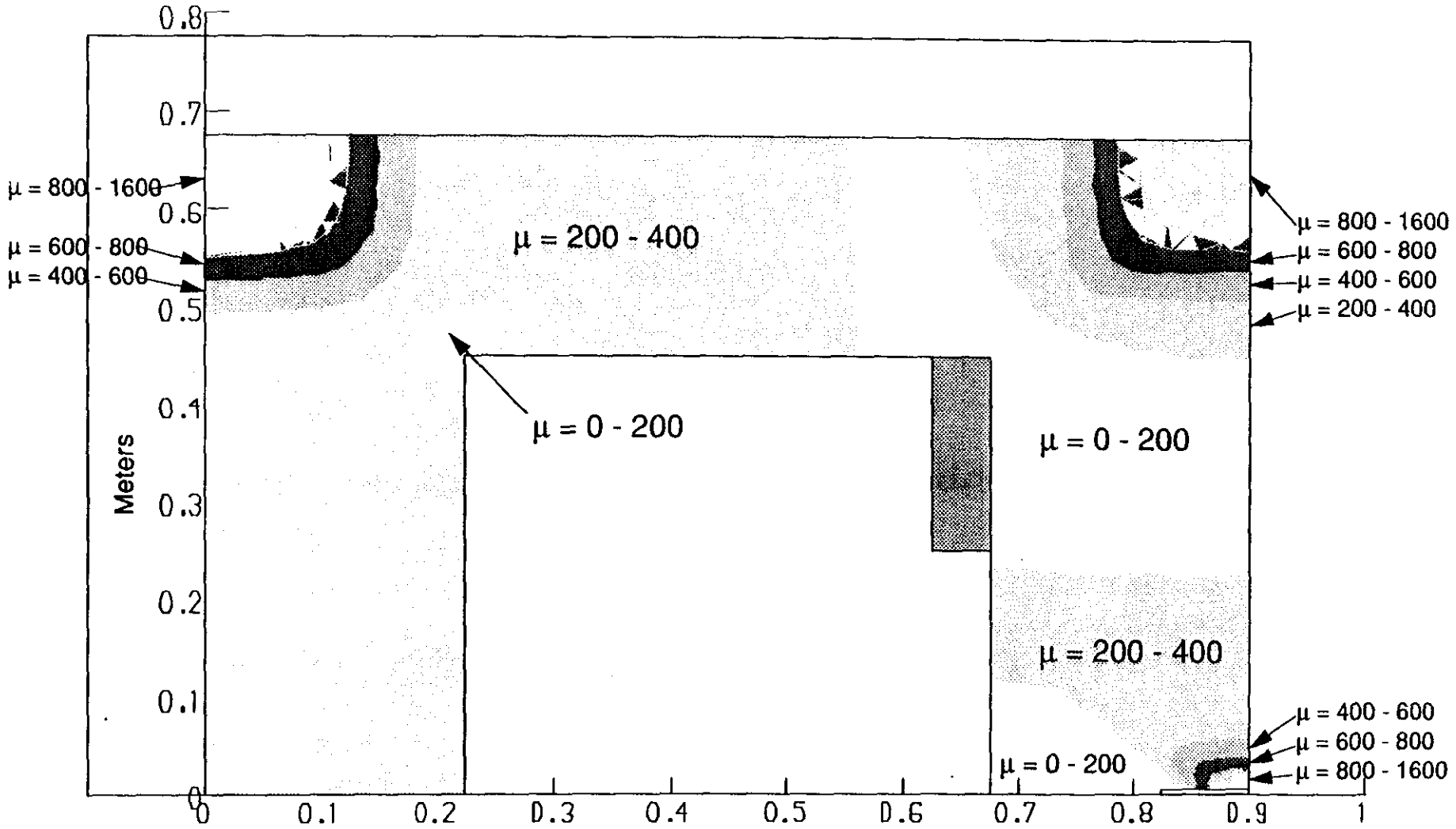


Component: MU

0 800 1600

ELEM=LINE SYMM=XY SOLN=AT FIEL=MAGN
Static Solution Mesh 4350 Elements 7 Regions

VF/PE2D.8