Fermilab Library
0 1160 0052510 9

SDC-90-00096

SDC
SOLENOIDAL DETECTOR NOTES

PROPOSAL FOR LOI DETECTORS

R. W. Kadel

October 15, 1990

Lawrence Berkeley Laboratory
1 Cyclotron Road Berkeley, California 94720
Solenoidal Detector Collaboration

Richard W. Kadel ∘ M.S. 50A/2129
Ph. (415)486-7360 ∘ LBL 50A-Rm 2141
FAX (415)486-5101 ∘ Bitnet KADEL@LBL

Dear SDC Colleague;

Since the Dallas meeting, we have been working on the layout of the detector, assuming the new dimensions for the 'descoped' SDC tracking volume. Enclosed you will find two proposals for the LOI detector. One detector has a Pb/Scintillator Calorimeter and the other assumes a Liquid Argon Calorimeter. The outermost dimension of the detector has not change much, but there are significant changes to the internal details.

General Comments common to both proposals: The same tracking layout and coil dimensions have been used in both detectors. These represent my best understanding of the tracking layout described at the conclusion of the Dallas meeting. As usual, 200 mm has been reserved at either end of the tracking volume for neutron absorber. Other than LV power and cooling for the silicon detector, we have received no estimates for the utilities or cable plant from the any tracking system to the outside of the calorimeter. The cable path for the silicon system will depend upon the technology choice for the barrel and intermediate areas. In the case of wire tracking or a hybrid wire/fiber system, the logical path for the silicon cables will be to run between the intermediate and barrel tracker. For a pure fiber system, the logical path for the cables from the silicon tracker is around the end of the intermediate tracker, since it is our understanding that relatively little access is required inside the coil for a fiber tracker.

The muon system is logically identical in both detector proposals, with the dimensions adjusted to take into account the different sizes of the calorimeters and different access requirements. The innermost layer of the barrel muon system (layer 1+ 2) is defined to be 1000 mm thick. The thickness (t) of the other chambers were computed from the formula:

$$t = 2 \times x \times N + 100 \text{ (in mm)}$$

where x is the thickness needed for an individual layer (25 mm);N is the number of layers requested by the muon group at Dallas; the factor of 2 accounts for overlaps and the 100 mm allows for space between chamber planes and movement of chambers for maintenance. We have increased the space between the chambers and the steel from 50 to 150 mm radially and to 250 mm at the ends in z where joints between coils are made. No space has been left for trigger scintillators inside the muon steel.

The transition between the barrel and endcap regions is not ideal and requires work. The conflict is between the desire to reduce the overall length of the detector while smoothly varying the thickness of steel (and P_t resolution) in the transition region between the barrel to the endcap toroids.

Comments specific to the Pb/Scintillator Calorimeter layout: The outline of the calorimeter comes to us directly from ANL. The diameter is larger than the detector proposal shown in Dallas because 300 mm of space has been added in the radial dimension to allow for mechanical support at the back of the calorimeter. This mechanical support

may also be part of the return flux path, but even in this case the back of the calorimeter proper may include iron absorber. The outer radius of the calorimeter at $\theta = 90°$ should be reasonably good. The roughly cylindrical outline of the calorimeter may be changed to a more 'water-mellon' like shape depending on detailed engineering studies of the intermediate region. This would not effect the diameter at 90°, but could lead to a reduction of the volume of calorimeter in the intermediate area, as well as allowing more space for electronics. At the back of the calorimeter we have left 1600 mm of space of which 600 mm is reserved for electronics and 1000 mm is allocated to access. In the intermediate area the electronics space is increased to 750 mm because of the higher density of calorimeter towers and the access space is combined with the lever arm required for the muon endcap toroid system.

One critical area will be the allocation of space at the back of the calorimeter. This space must be shared between the tracking and calorimeter subsystems. We have not obtained a list of requirements from any of the tracking or calorimetry groups.

Comments specific to the Liquid Argon Calorimeter Layout: The liquid argon layout represents a departure from all previous layouts because the method of access to the detector has been changed. Access to the electronics at the back of the calorimeter or tracking volume is accomplished by moving the endcap muon toroids and endcap calorimeter about 8500 mm axially. There is no simple personnel access. This was done for two reasons: 1) A liquid Argon calorimeter is about 1 m bigger in radius than the equivalent Pb/Scintillator calorimeter. Removing the access space at the back of the calorimeter saves money. 2) It is unlikely that access space at the back of the calorimeter was useful because safety issues related to oxygen deficiency hazards in a confined space would most likely have precluded the use of this area for access.

To further reduce the radial dimension, the tracking and calorimetry electronics space has been combined into a 650 mm gap between the calorimeter and the return iron for the solenoid. The area available for electronics crates is an annular disk roughly 30 m in circumference and 650 mm high (radially) located at both ends of the barrel calorimeter. We need to know if electronics can survive in the magnetic field inside the return yoke. The expected magnetic field is about 1 KG. Low voltage power supplies could be located outside the muon steel.

The muon system and tracking systems are logically equivalent to the Pb/Scintillator proposal, except that access to chambers and local electronics will be more restricted. Don Groom, et al, are currently trying understand the radiation from residual activity in Pb or Iron calorimeters to establish the minimum time after the beam is turned off that access to the tracking volume would be permitted.

I hope that readers of this letter will understand these drawings to be proposals, and we encourage your comments. I am not personally pleased with the access scenario described above for the liquid argon calorimeter, but it is possible that the limiting problem for access for *both* proposals might be residual radiation or saftey and not mechanical issues. It should

be also understood that the difference in outer dimension between the two detectors is not significant.

Finally, on a more upbeat note, you should find enclosed with the detector drawing three color slides of the EOI Type S detector, suitable use in talks. Color slides of the LOI detector will not be available until after we have an LOI.

Sincerely,

Richard W. Kadel

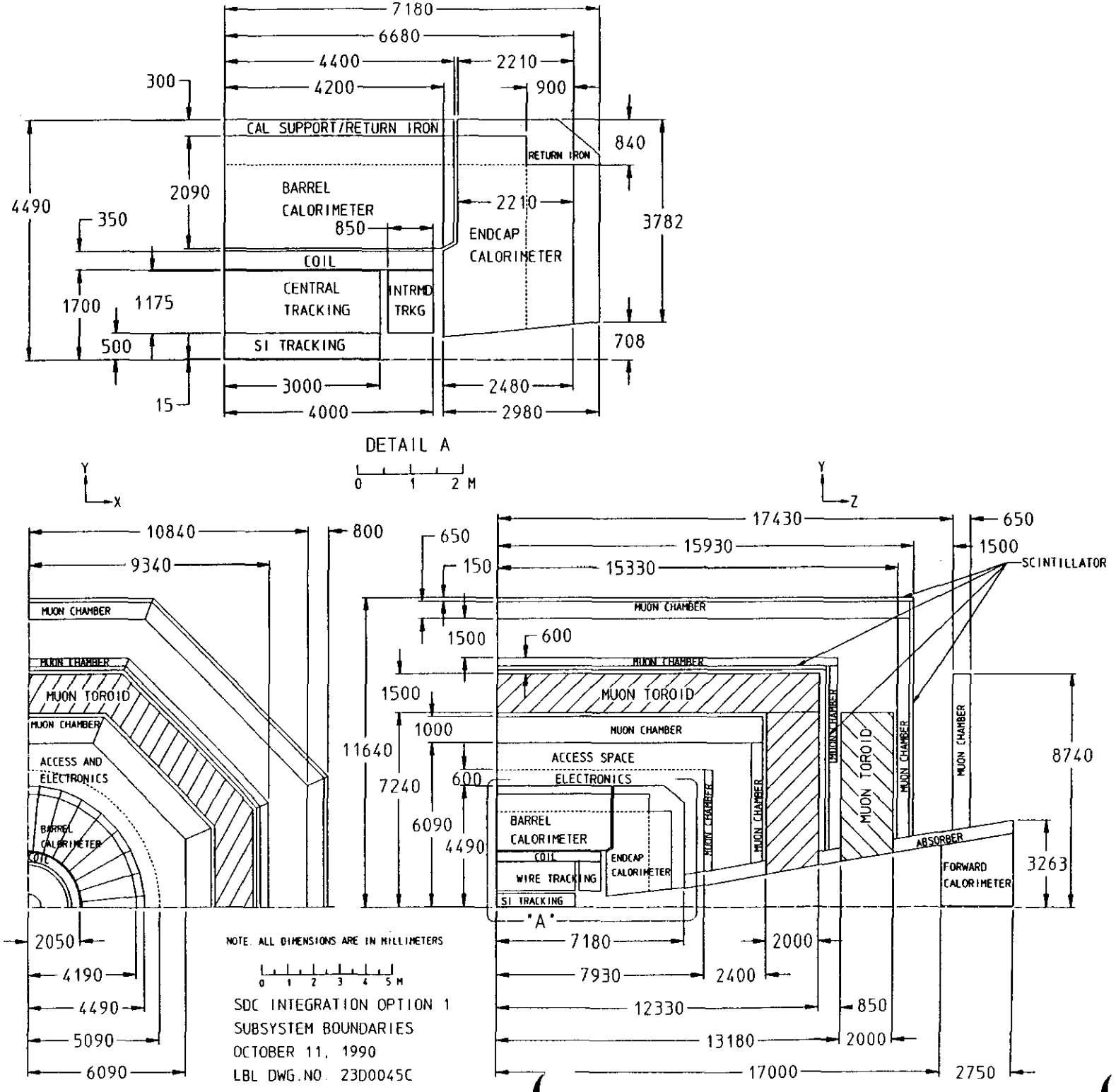
7180
6680
4400
2210
4200
900
300
CAL SUPPORT/RETURN IRON
RETURN IRON
840
4490
2090
BARREL
CALORIMETER
2210
350
850
ENDCAP
CALORIMETER
3782
COIL
CENTRAL
TRACKING
INTRMD
TRKG
1700
1175
500
SI TRACKING
708
3000
2480
15
4000
2980
DETAIL A
0 1 2 M
Y
X
Y
Z
10840
800
650
17430
650
9340
150
15930
1500
15330
SCINTILLATOR
MUON CHAMBER
MUON CHAMBER
1500
600
MUON CHAMBER
MUON CHAMBER
MUON TOROID
1500
MUON TOROID
MUON CHAMBER
1000
MUON CHAMBER
11640
ACCESS AND
ELECTRONICS
ACCESS SPACE
8740
7240
600
ELECTRONICS
6090
BARREL
CALORIMETER
4490
COIL
ENDCAP
CALORIMETER
ABSORBER
WIRE TRACKING
FORWARD
CALORIMETER
3263
SI TRACKING
"A"
2050
7180
2000
4190
7930
2400
4490
12330
850
5090
13180
2000
6090
17000
2750
NOTE. ALL DIMENSIONS ARE IN MILLIMETERS
0 1 2 3 4 5 M
SDC INTEGRATION OPTION 1
SUBSYSTEM BOUNDARIES
OCTOBER 11, 1990
LBL DWG.NO. 23D0045C

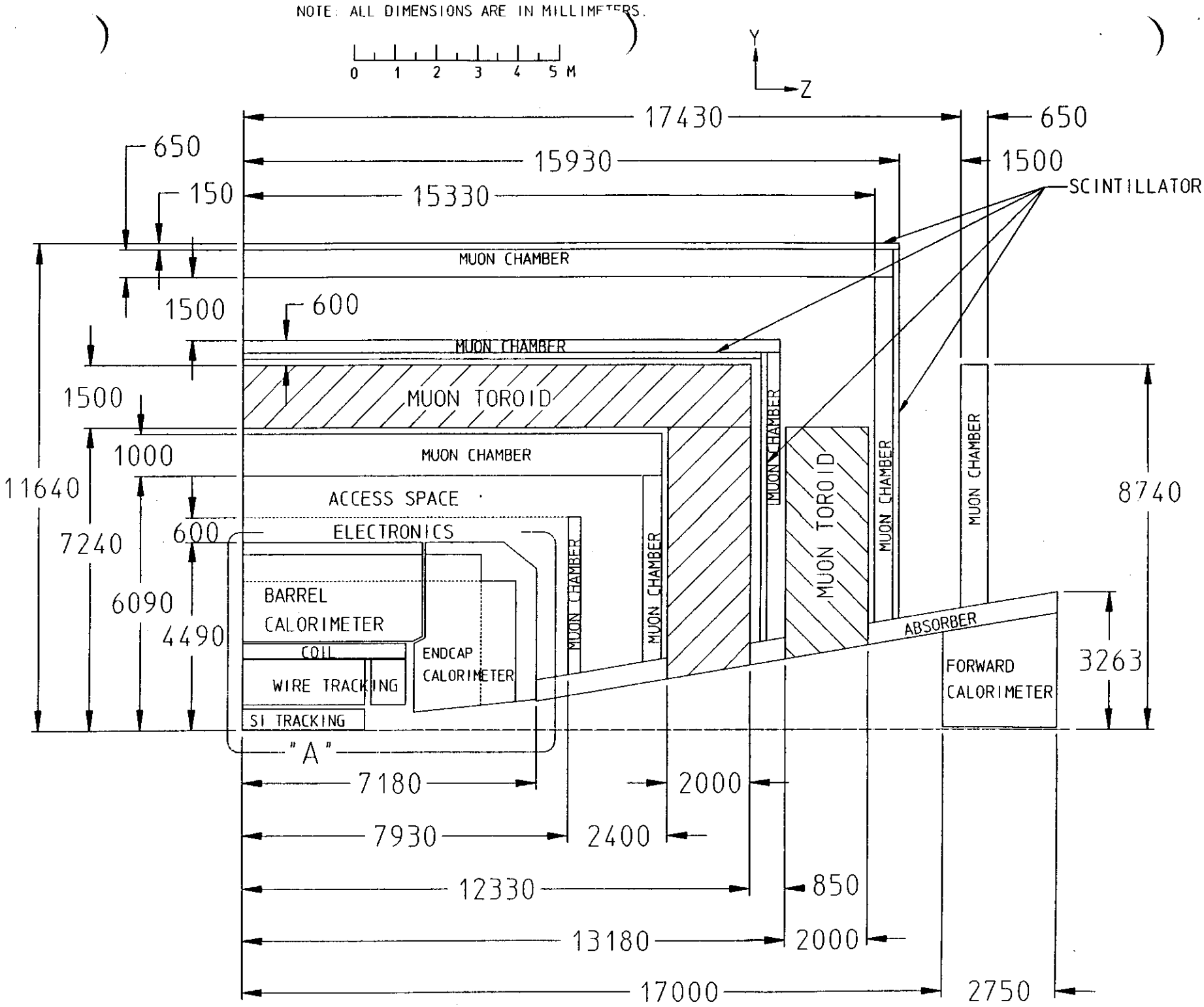
NOTE: ALL DIMENSIONS ARE IN MILLIMETERS.
0 1 2 3 4 5 M
Y
Z
17430
15930
15330
650
150
1500
600
1000
7240
6090
4490
11640
8740
3263
7180
7930
12330
13180
17000
2000
2400
850
2750
SCINTILLATOR
MUON CHAMBER
MUON TOROID
ACCESS SPACE
ELECTRONICS
BARREL CALORIMETER
COIL
WIRE TRACKING
SI TRACKING
ENDCAP CALORIMETER
ABSORBER
FORWARD CALORIMETER
"A"

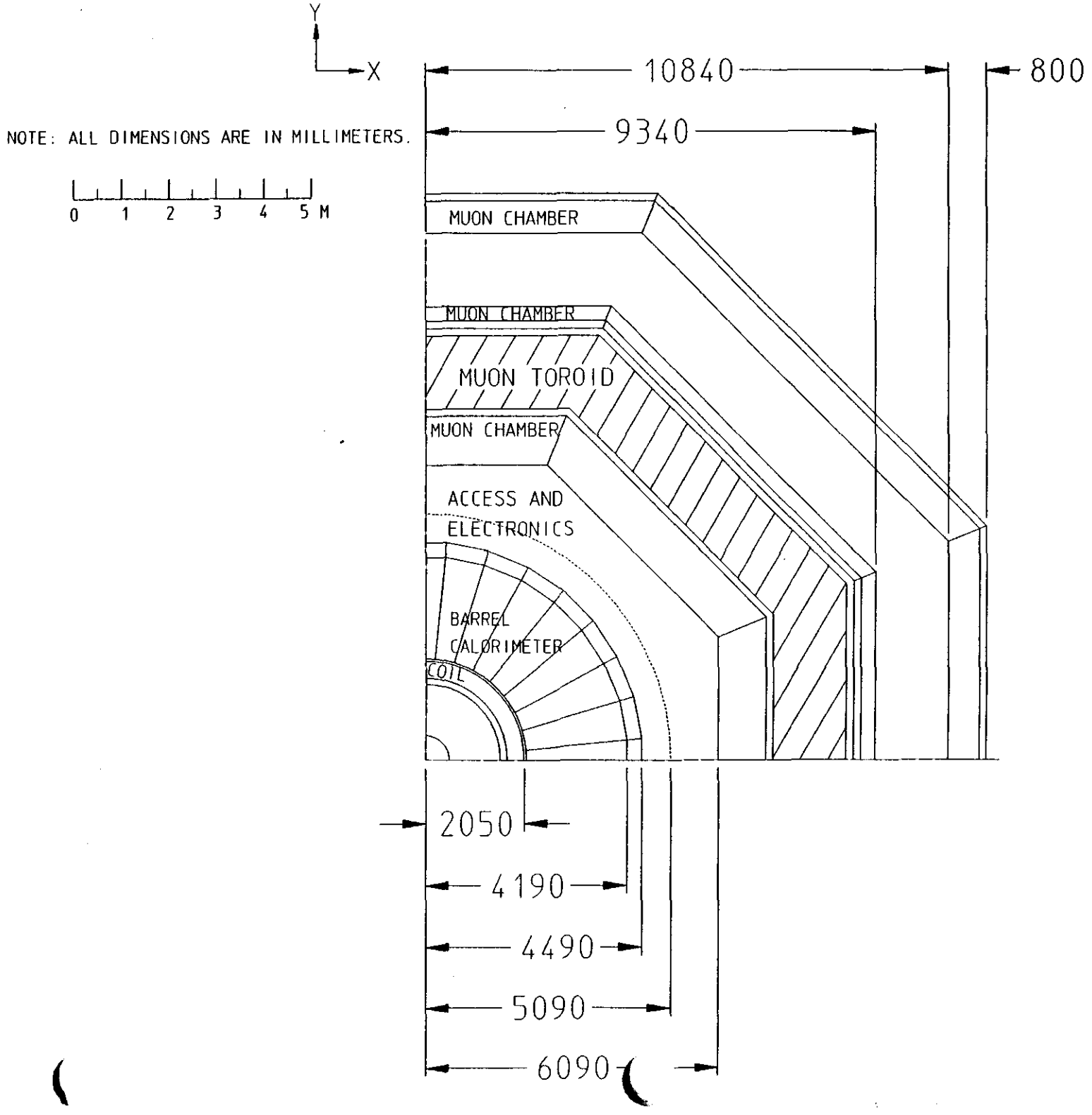
Y
X
NOTE: ALL DIMENSIONS ARE IN MILLIMETERS.
0 1 2 3 4 5 M
10840
800
9340
MUON CHAMBER
MUON CHAMBER
MUON TOROID
MUON CHAMBER
ACCESS AND
ELECTRONICS
BARREL
CALORIMETER
COIL
2050
4190
4490
5090
6090

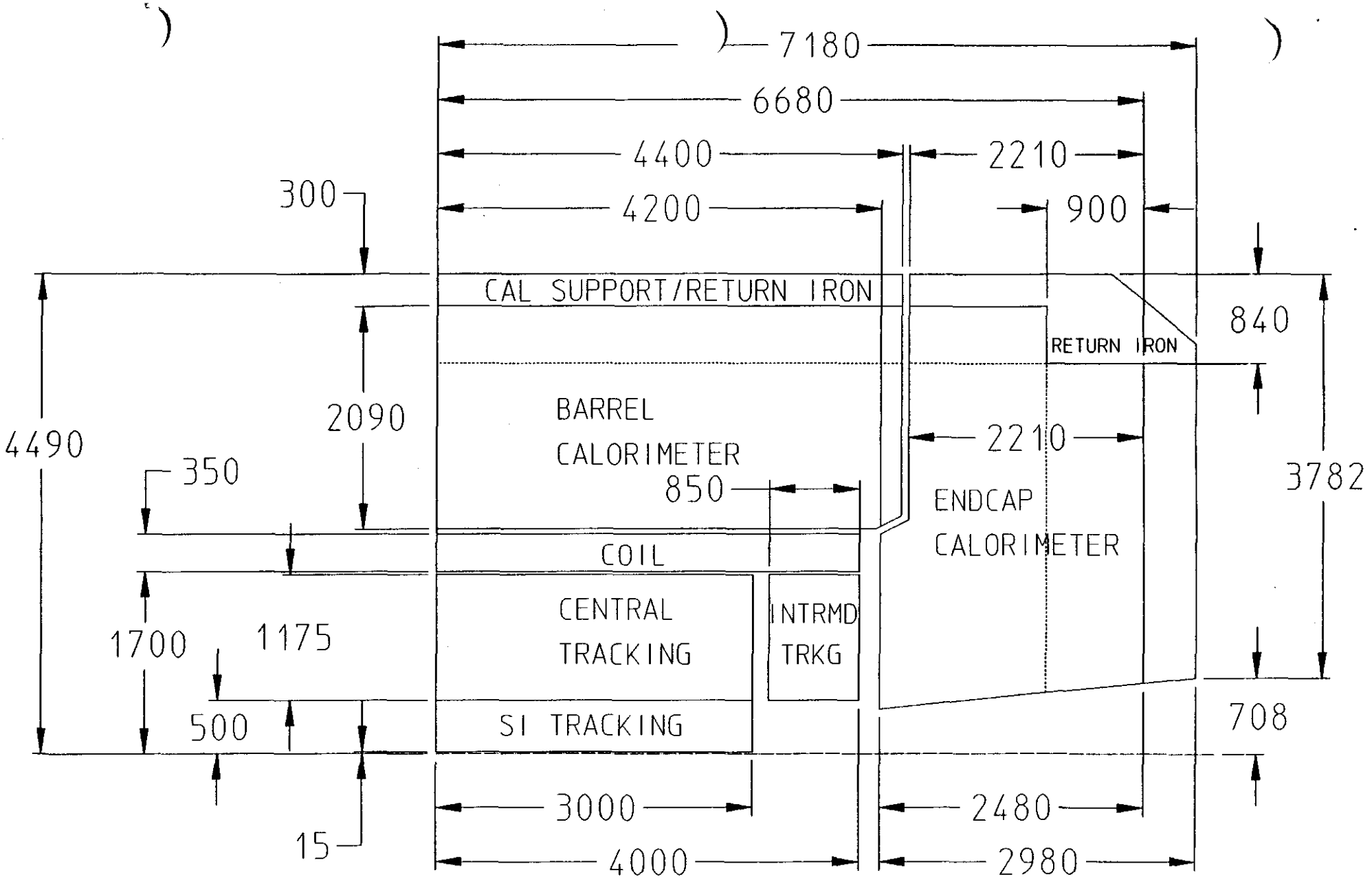

DETAIL A

0 1 2 M

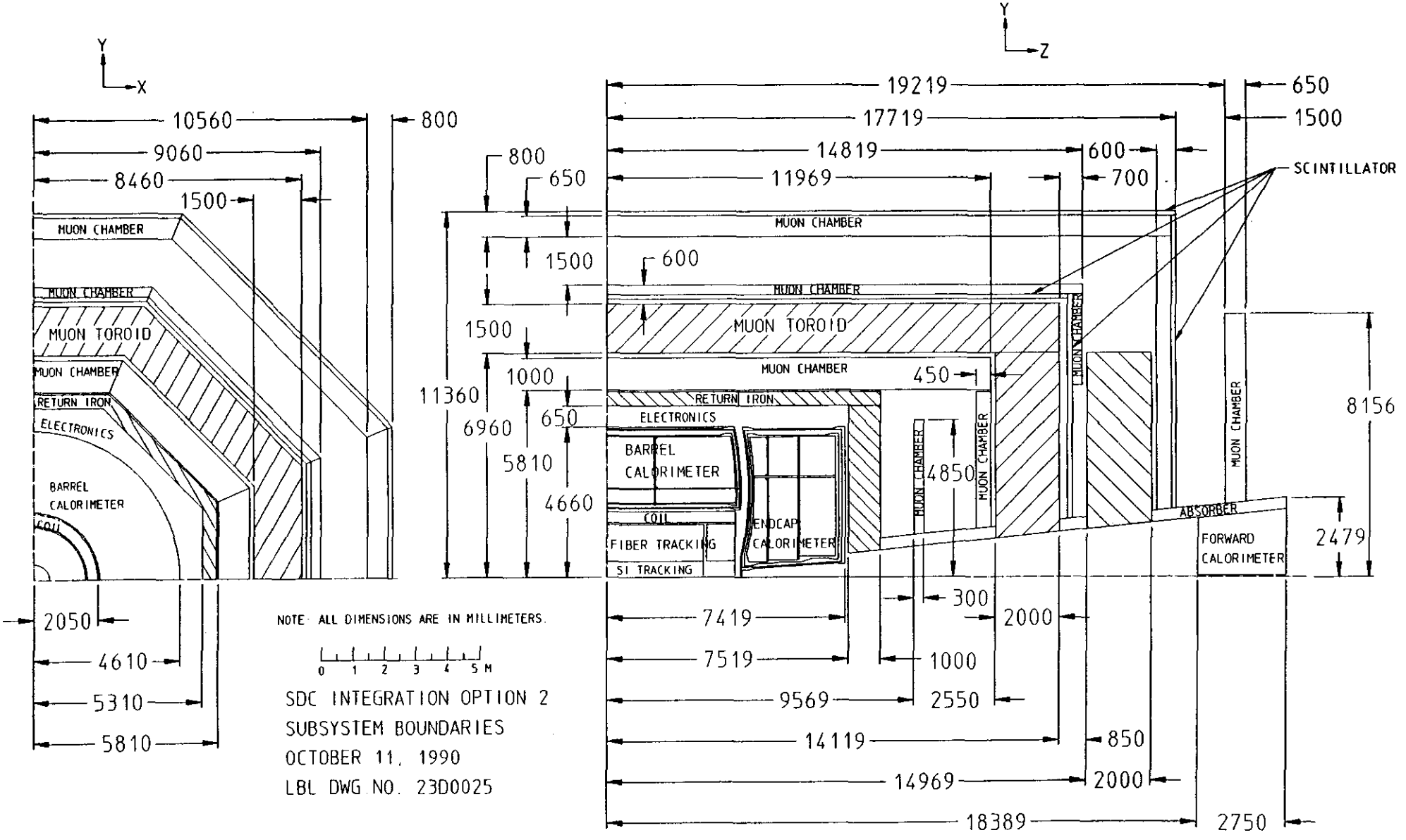
Y
X
10560
9060
8460
1500
800
MUON CHAMBER
MUON CHAMBER
MUON TOROID
MUON CHAMBER
RETURN IRON
ELECTRONICS
BARREL
CALORIMETER
COIL
2050
4610
5310
5810
Y
Z
19219
17719
14819
11969
650
1500
600
700
SCINTILLATOR
800
650
1500
600
1500
1000
11360
6960
650
5810
4660
MUON CHAMBER
MUON CHAMBER
MUON TOROID
MUON CHAMBER
450
RETURN IRON
ELECTRONICS
BARREL
CALORIMETER
COIL
FIBER TRACKING
SI TRACKING
ENDCAP
CALORIMETER
MUON CHAMBER
4850
MUON CHAMBER
MUON CHAMBER
MUON CHAMBER
8156
ABSORBER
FORWARD
CALORIMETER
2479
300
2000
7419
7519
1000
9569
2550
14119
850
14969
2000
18389
2750
NOTE: ALL DIMENSIONS ARE IN MILLIMETERS.
0 1 2 3 4 5 M
SDC INTEGRATION OPTION 2
SUBSYSTEM BOUNDARIES
OCTOBER 11, 1990
LBL DWG NO. 23D0025

NOTE: ALL DIMENSIONS ARE IN MILLIMETERS.

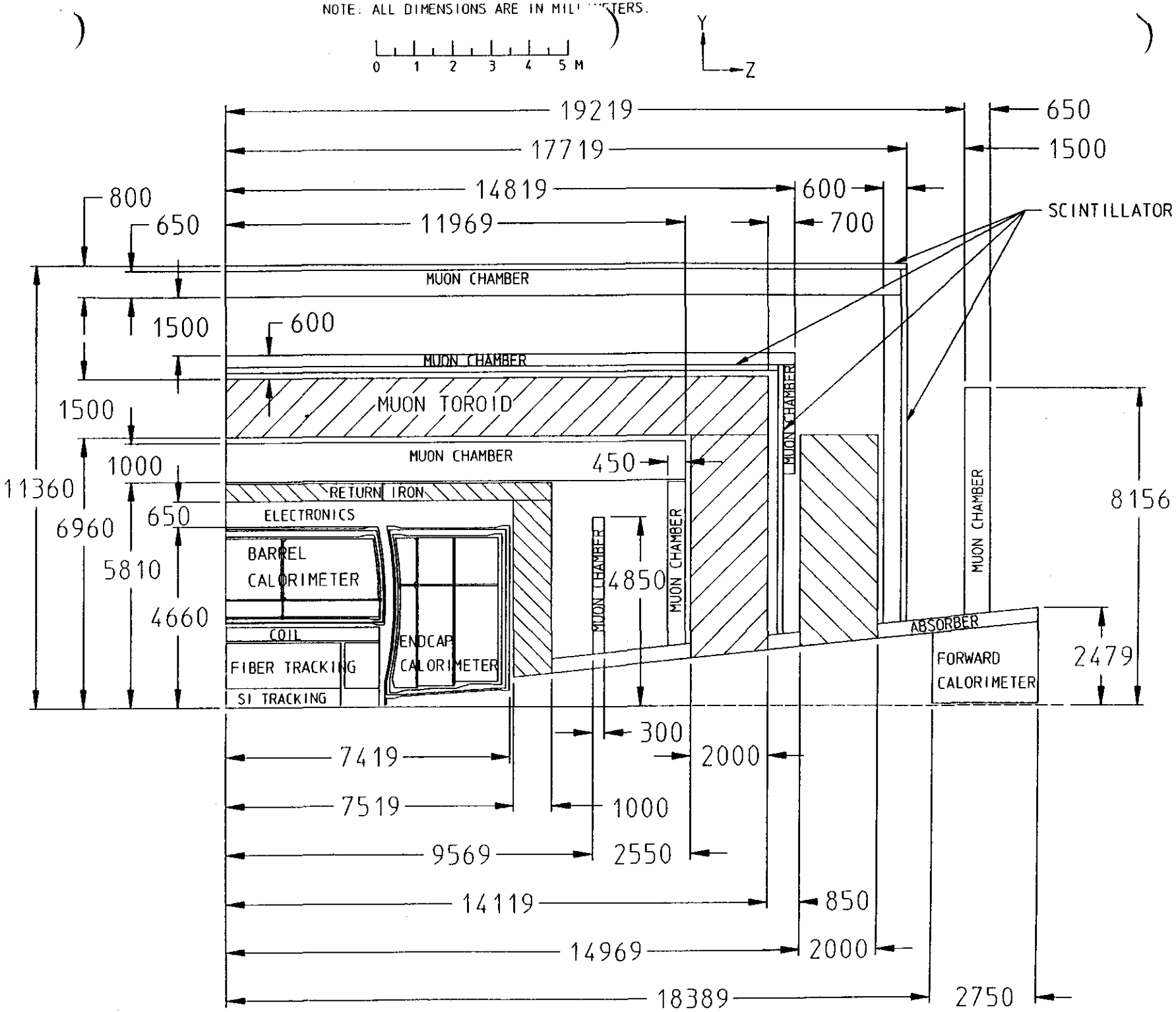

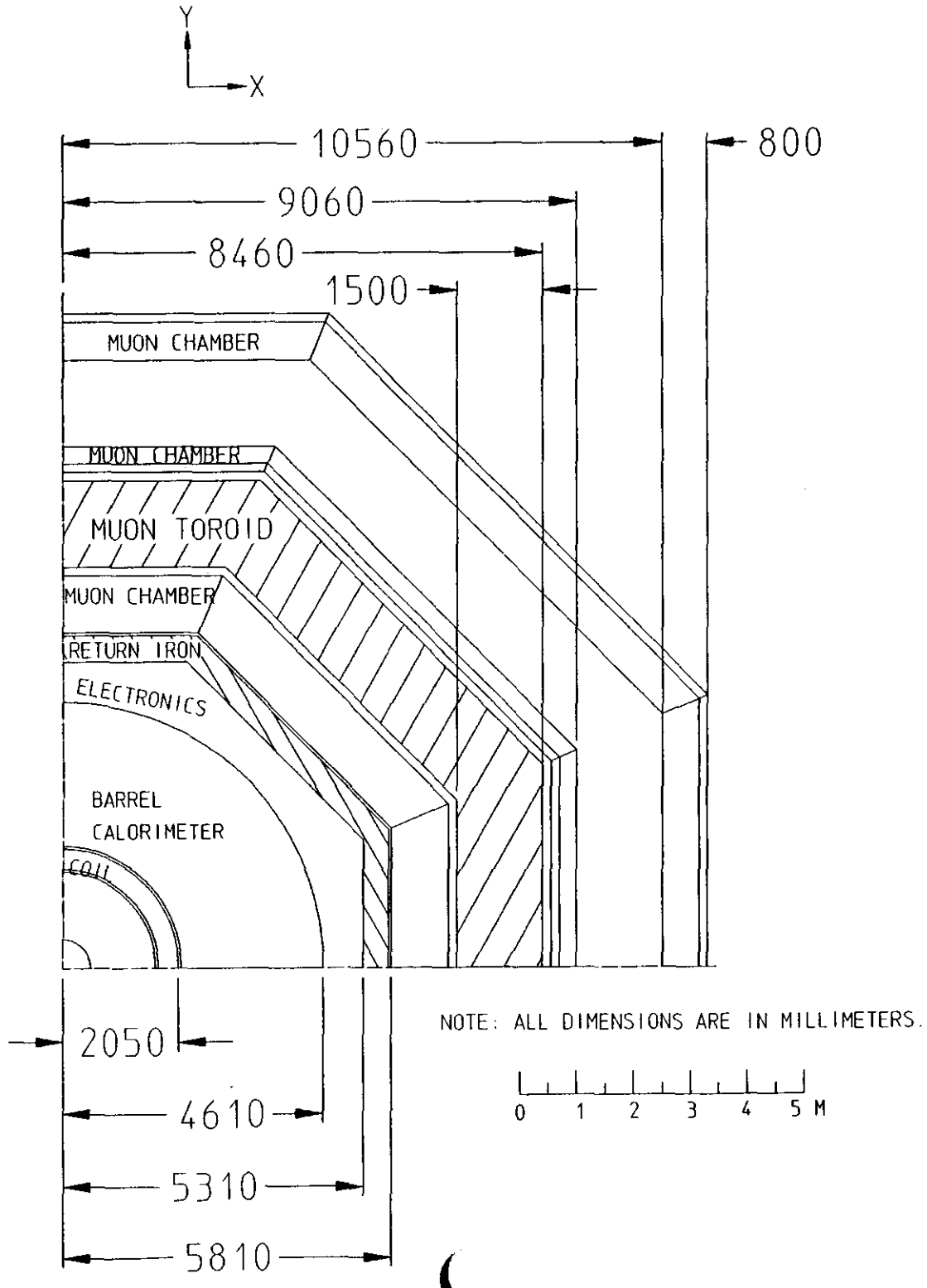
Y
X
10560
800
9060
8460
1500
MUON CHAMBER
MUON CHAMBER
MUON TOROID
MUON CHAMBER
RETURN IRON
ELECTRONICS
BARREL
CALORIMETER
COIL
2050
4610
5310
5810
NOTE: ALL DIMENSIONS ARE IN MILLIMETERS.
0 1 2 3 4 5 M