Fermilab Library
0 1160 0052506 7

SDC-90-00092

SDC
SOLENOIDAL DETECTOR NOTES

THE USE OF GAS CERENKOV COUNTERS AS PART OF A TRIGGER SYSTEM FOR MUONS IN SSC DETECTORS

Uriel Nauenberg

October 1990

THE USE OF GAS CERENKOV COUNTERS AS PART OF A TRIGGER SYSTEM FOR MUONS IN SSC DETECTORS

Uriel Nauenberg, University of Colorado

The study of event rates at the SSC for pseudorapidities ≥ 1.3 and luminosities of 10^{33} cms^{-2} sec^{-1} show that the singles rates in the muon segments of large detectors is about 10^7 /sec[1]. This rate calculation follows from just the singles punchthrough past the calorimeter elements of the detector. In addition, every jet may be accompanied by a number of random low momentum punchthroughs which produce a "white noise" affecting the detection of high P_t particles.

The search for the Higgs may well require that we run at much higher luminosities (a few $\times$ 10^{34})in order to determine that in fact the system observed has the Higgs like properties. This can be done by measuring a few of the branching ratios. This implies very high single rates which will affect the effectiveness of the trigger. Hence it is very important to contemplate unusual forms of triggering devices that will substantially reduce backgrounds in this region.

We have also investigated the angular distribution of the muons from the decay process $H \rightarrow 2Z's \rightarrow 4\mu's$. This was done with ISAJET. We concluded that a large fraction of the muons go in the forward and backward hemispheres of the detector. Typical numbers that indicate this distribution is the fact that if we define the forward-backward hemisphere by the angular limit $\theta \leq 35°$ and $\geq 145°$ then, for a Higgs mass of 400 Gev/c^2, if we exclude the very small angles region ($\theta \leq 5°$), approximately 80 % of the time we have 1 or more muon, 65 % 2 or more, 35 % 3 or more, and 12 % all 4 in the forward region. For the barrel region the numbers are similar. The forward-backward directions are the regions with the highest single rates. Hence it is important to have a robust trigger system in those regions of the detector.

We propose here the use of a nitrogen gas Cerenkov counter to reduce drastically ($\approx 10^{3-4}$) the singles counting rate from particles in the outer regions of the detector but associated with the interaction, and from beamline associated background.

The main characteristics of a gas Cerenkov counter are described in Fig. 1 and Fig. 2. The first figure shows that nitrogen gas does not produce Cerenkov radiation for muons below 4.5 GeV/c and the second figure shows that the direction of the emitted light is strongly collimated in the forward direction; the angle of the light is less than 25 mrad from the particle's direction. Hence the direction of the light follows within 1.5 deg. the direction of the particle producing it.

A large fraction of the single particle punchthrough and decays detected after the calorimeter are muons with momenta below 5 Gev/c[1]. As shown in Fig. 1 these will not generate any Cerenkov light and hence will not contribute to the singles rate in a Cerenkov counter. Also, particles that do not come from within $\approx$ 3 deg. of the direction followed by a very high momentum particle coming from the target will not be counted either because the Cerenkov light will not be directed towards the detecting phototube (see discussion below). In addition particles associated with the beam-accelerator background will not be detected because the Cerenkov light is not pointing in the correct direction and/or is not associated with the interaction point. It is because of these properties that we can have a major reduction of the singles rates in a trigger system that includes a Cerenkov counter.

We propose to locate the gas Cerenkov counter between two drift chamber banks of the muon system as shown in Fig. 3. Each cell can consist of 4 ($.5\times.5$ m^2) aluminized spherical mirrors with a radius of curvature of $\approx$ 3 meters (focal length 1.5 m). The 4 mirror assembly focuses the Cerenkov light onto the face of a 5" phototube (most likely a BURLE 8854, or EMI 9390B). We are also investigating the use of a 2" phototube in association with a Winston cone. The mirrors will be so aligned that a very high momentum particle coming from the center of the

interaction area will have its Cerenkov light focused at the center of the phototube surface. As shown in Fig. 4 a particle whose angle of incidence differs by 2 deg. from this direction will have its Cerenkov light focused at the edge of the phototube. Using the values of $\int$Bdl for the designed air core toroid magnet, a particle whose momenta is less than 30 GeV/c and traverses the lower end of the air core magnet (or iron) will be bent by a larger angle and hence will not be detected. This implies a lower limit on the detectable P_t of $\approx$ 10 GeV/c. These conclusions are not affected by the multiple scattering of the muons while traversing the calorimeter since the effective multiple scattering angle is much smaller than the bend angle for the present SSC detectors being designed. This lower limit of the value of P_t for particles being detected leads to the drastic reduction in the singles rates from particles associated with the interaction [1].

Because the proposed linear dimensions of each mirror in the cell (1 m) is comparable to the focal lentgh (1.5 m) we have also studied the effect of spherical aberrations. It produces a change in the best value of the focal length of the mirror so that light hitting the mirror away from the center will not get focused in the same spot of the phototube surface as the light hitting the center of the mirror in the cell. These changes in the focal length are described in Fig. 5, Fig. 6, and Fig. 7. The changes in the mirror effective radius of curvature is no more than 3 %. As shown in Fig. 7, the circle of confusion in the focus region is $\approx$ 1 cm. This level of aberrations should have only a very small effect on the detection efficiency of the Cerenkov counter. We propose to carry out a detailed GEANT simulation of the muon part of the detector with the Cerenkov geometry to determine its performance.

In Fig. 8 we show the Cerenkov detector structure that would fit in the space specified and would cover various regions of rapidity in the forward areas of the detector. Using this drawing we determine that we need 134 cells to cover the pseudo-rapidity region between 1.56 and 2.5 on each end. If we want to cover the rapidity up to 1.1 we need 382 cells. Hence, the total number of Cerenkov cells necessary to cover both ends is between 268 and 764 depending on the rapidity

range above 1.1 being covered.

The trigger system would then consist of one bank of Cerenkov counters of the type described above followed by a bank of scintillators right behind the mirrors. The scintillators would be about 25 cms across and 1 meter long; 4 such scintillators would cover a Cerenkov cell so that we would form a coincidence between a Cerenkov cell with an "or" of the four counters behind. This would lead to 1072 scintillator counters to cover the rapidity range above 1.56. Each scintillator would have 1 phototube attached at one end. The time of the coincidence would be defined by the Cerenkov since this signal is very sharp given that all the Cerenkov light from a given particle reaches the phototube at the same time and there is very little variation of this time ($\leq$ 1 nsec) for particles entering the counter at different places within a given cell observed by 1 phototube. The variation over the whole counter (pseudo-rapidity $\geq$ 1.0) is about 10 nsec.

One area where further work has to be carried out is to determine how to maintain and check the mirror alignment of such large structures. One possibility is the use of semiconductor detectors placed in a square array that would sense the displacement of light focused in the center of the square array. This problem will be investigated. In addition we propose to carry out a detailed GEANT simulation of this trigger system to study its performance. To do this well we need to test such a Cerenkov counter behind a calorimeter in a muon beam to understand its response under various conditions. This test is being carried out at Fermilab in early 1991. The behavior of the counter in this test will be used as input to the computer simulation.

In Table 1 below we present the various parameters of the Cerenkov trigger system being proposed.

TABLE 1

Cerenkov Counter Trigger System

Parameter	Number
Cerenkov gas	N_2
Length of Cerenkov medium	1.6-1.7 m
Expected # of photoelectrons from an RCA 8854 phototube	8 to 10
Mirror focal length (average)	1.425 m
Focal length variation due to spherical aberrations	+.029,-.022 m
Distance from phototube face to mirror surface	1.5 m
Range of distances between collision point and mirrors	17.44-19.85 m
Dimension of mirrors	$.50 \times .50$ m^2
Number of mirrors/cell	4
Number of cells/end cap ($1.56 \leq \eta \leq 2.5$)	134
Number of cells/end cap ($1.00 \leq \eta \leq 2.5$)	382

We have also investigated the cost of a single cell of such a counter. In Table 2 we describe our present cost estimate. The cost of the Cerenkov containers is not included but is not expected to cost more than $ 100-200 K depending on the pseudorapidity space being covered. We are also going to investigate the use of 2" phototubes with a Winston like cone for light collection. The cost of such a combination may well be 50 % of the cost of a 5" BURLE 8854 phototube. These various combinations, if obtainable, will be tested in a muon beam environment at Fermilab in early 1991.

TABLE 2

Cost Estimate of a Unit Cell

Parameter	**Cost (K$)**
One mirror blank	.050
Al and MgF Coating per mirror	.200
Cost of Mirrors/cell (4 mirrors)	1.000
Cost of a Phototube (BURLE 8854)	1.200
Phototube base	.050
Mirror holder system/cell	.100
Magnetic Shielding per Phototube	.100
Total Cost per Cell	2.450

REFERENCES

1. Muon Rates at the SSC, Dan Green, David Hedin, SDC-MU-FN-1, FNAL PUB- 90/18.

FIGURE CAPTIONS

1) Expected number of Cerenkov photoelectrons as a function of the particle momentum. We assume a reflectivity of 100 % and the phototube quantum efficiency of the RCA 8854 phototube.

2) Cerenkov angle as a function of momentum.

3) Possible placement of the Cerenkov module in the detector.

4) Position of the Cerenkov light on the surface of the phototube from a particle coming from the target and not bent by the magnetic field and from a particle coming from the target and bent by 2 deg. Dimensions are in mm.

5) Variations in the radius of curvature of a mirror due to the spherical aberrations near the edge of the mirror. This is done for three mirrors at different distances from the target. Dimensions are in mm.

6) The same study for spherical aberrations at the half way point of the mirror. Dimensions are in mm.

7) Ray tracing of a 1 m^2 mirror configuration that shows the circle of confusion in the focus region due to spherical aberrations.

8) A diagram of the position of the various cells and associated detecting phototubes in the Cerenkov module.

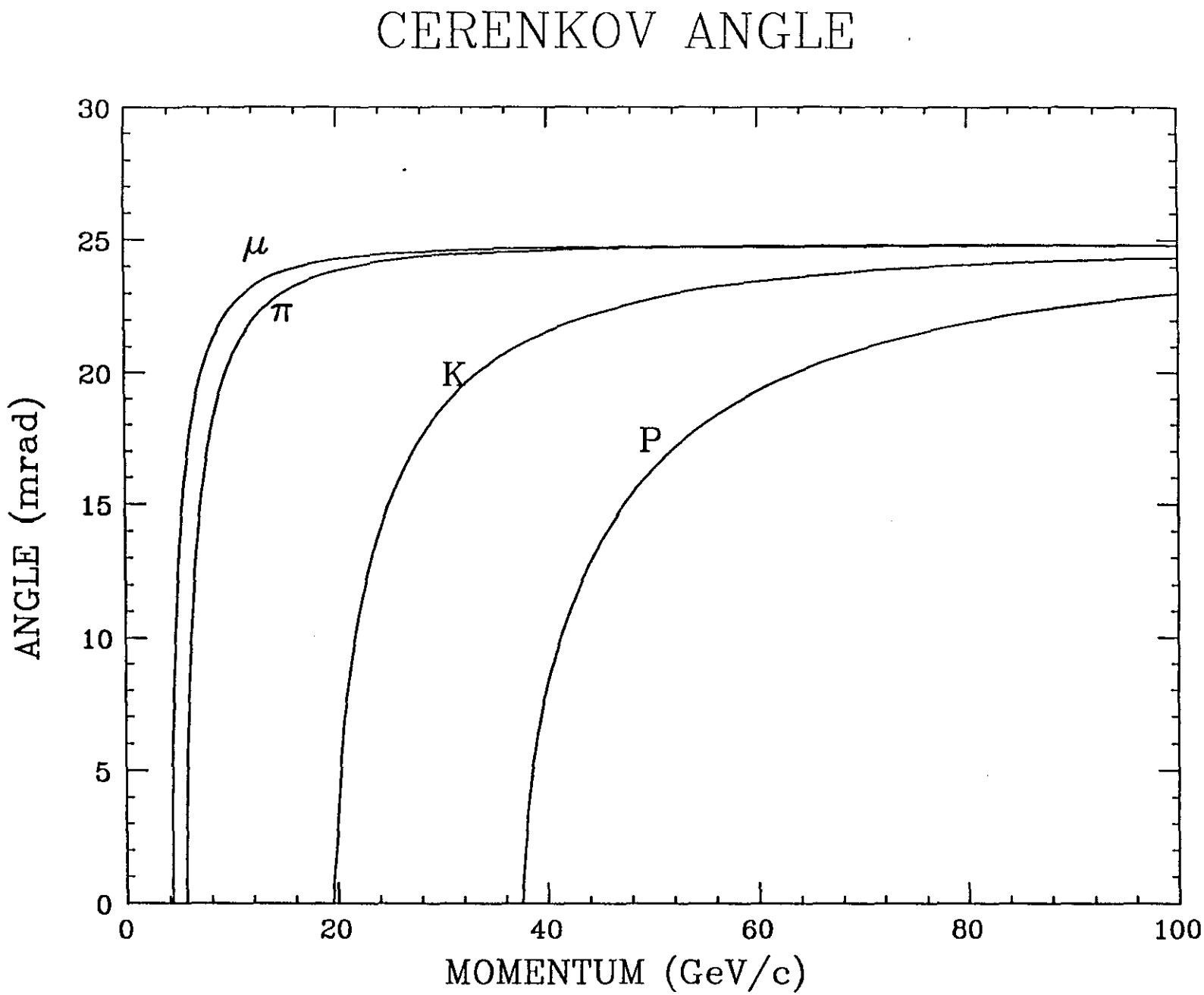
CERENKOV ANGLE
ANGLE (mrad)
MOMENTUM (GeV/c)
μ
π
K
P
0
5
10
15
20
25
30
0
20
40
60
80
100

FIG. 1

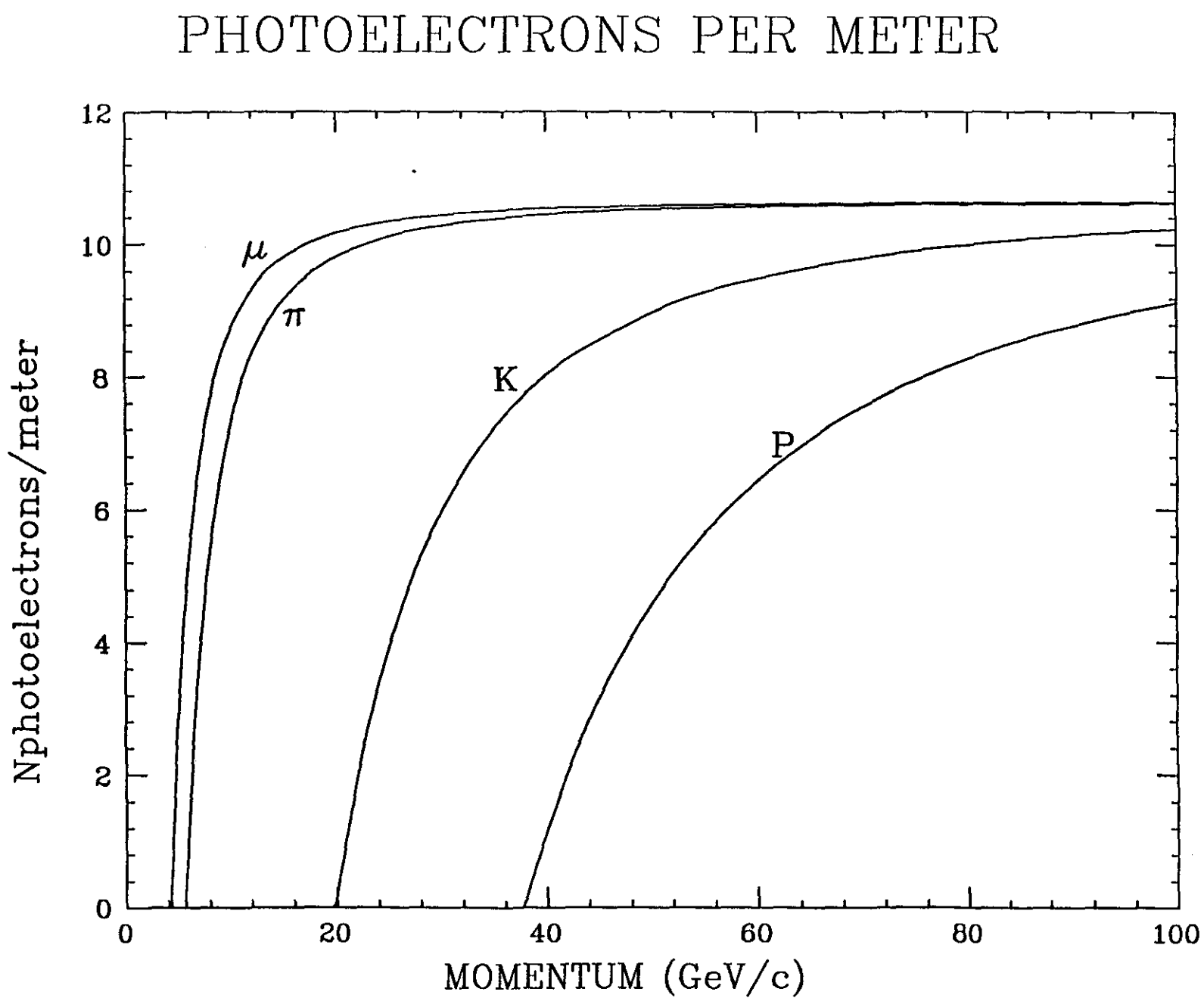
PHOTOELECTRONS PER METER
Nphotoelectrons/meter
MOMENTUM (GeV/c)
0
2
4
6
8
10
12
0
20
40
60
80
100
μ
π
K
P

FIG. 2

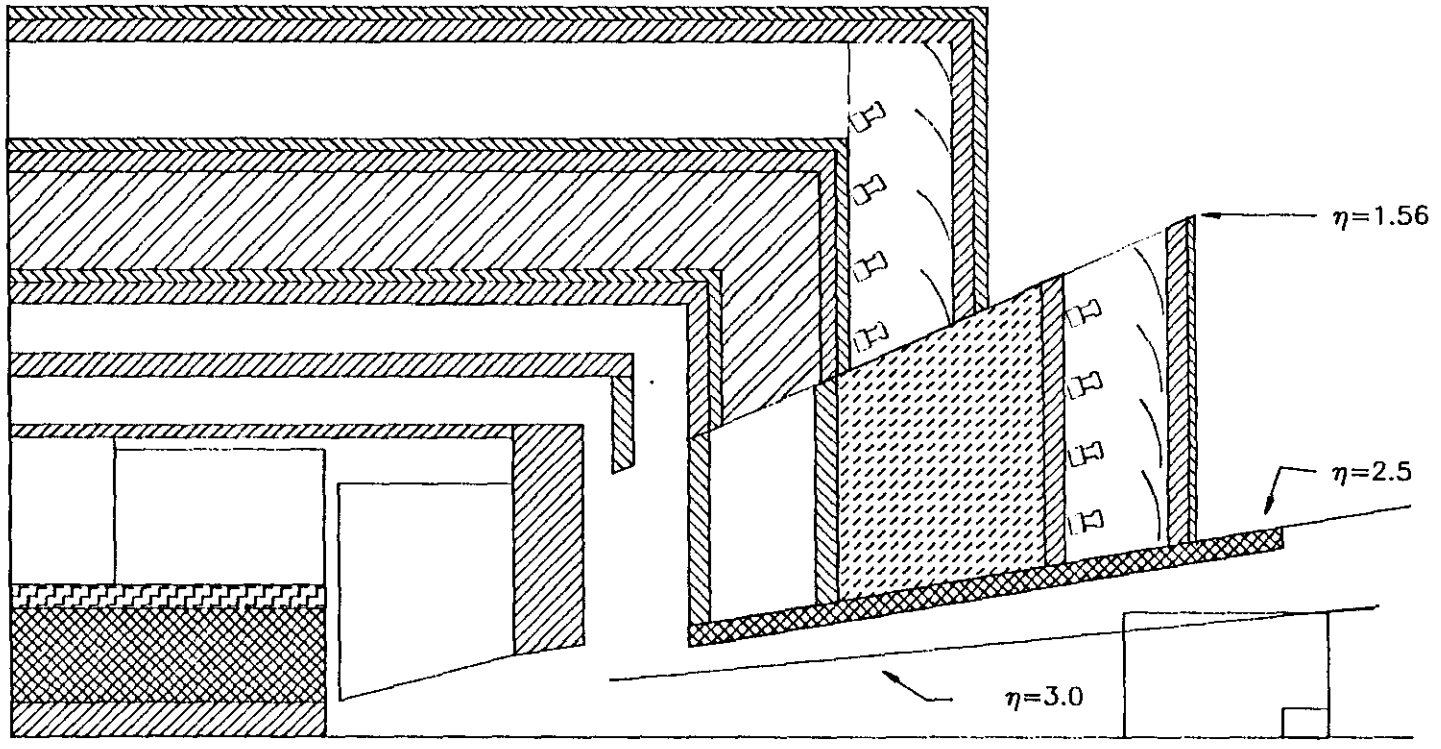

FIG. 3

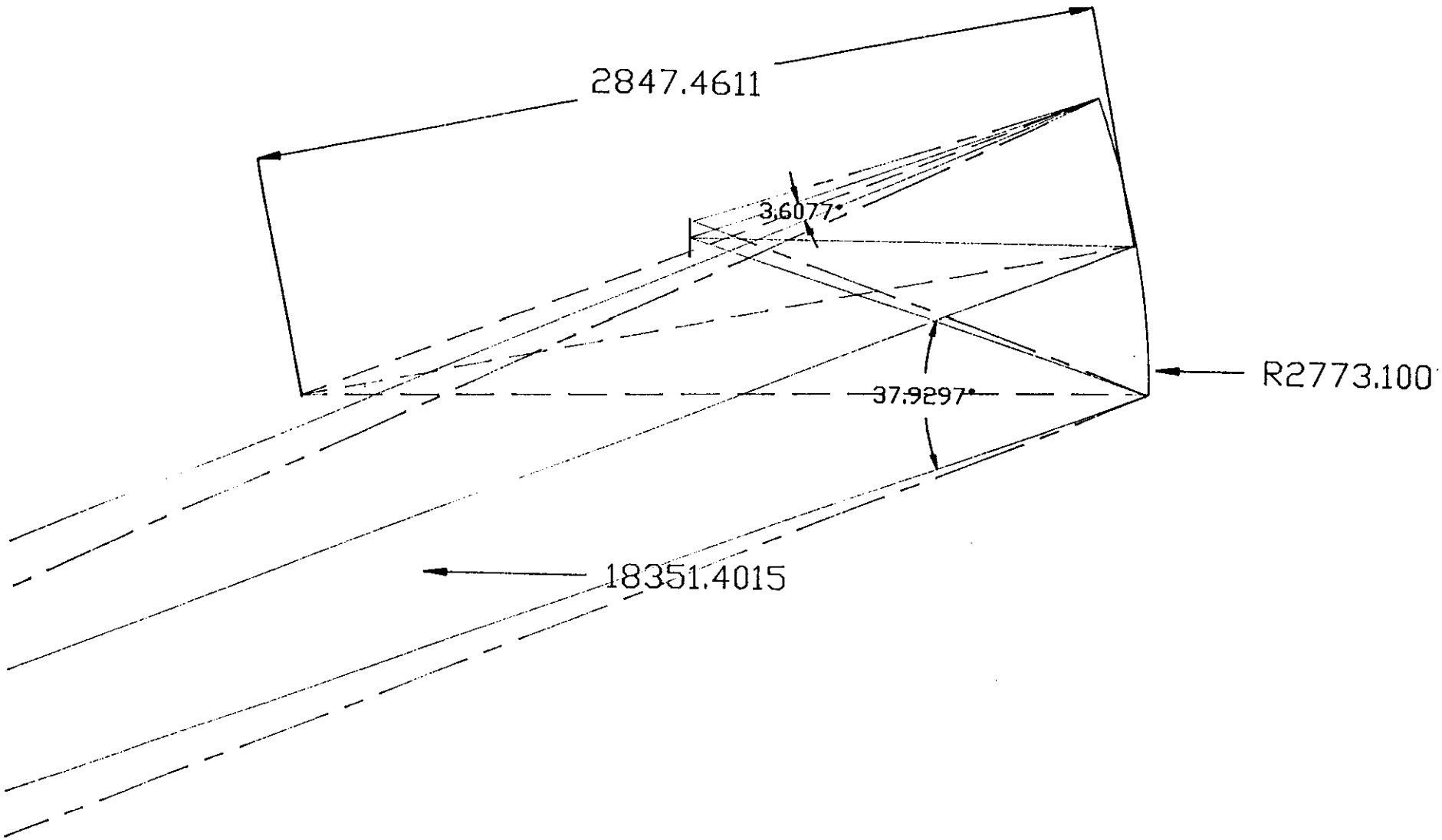

FIG. 4

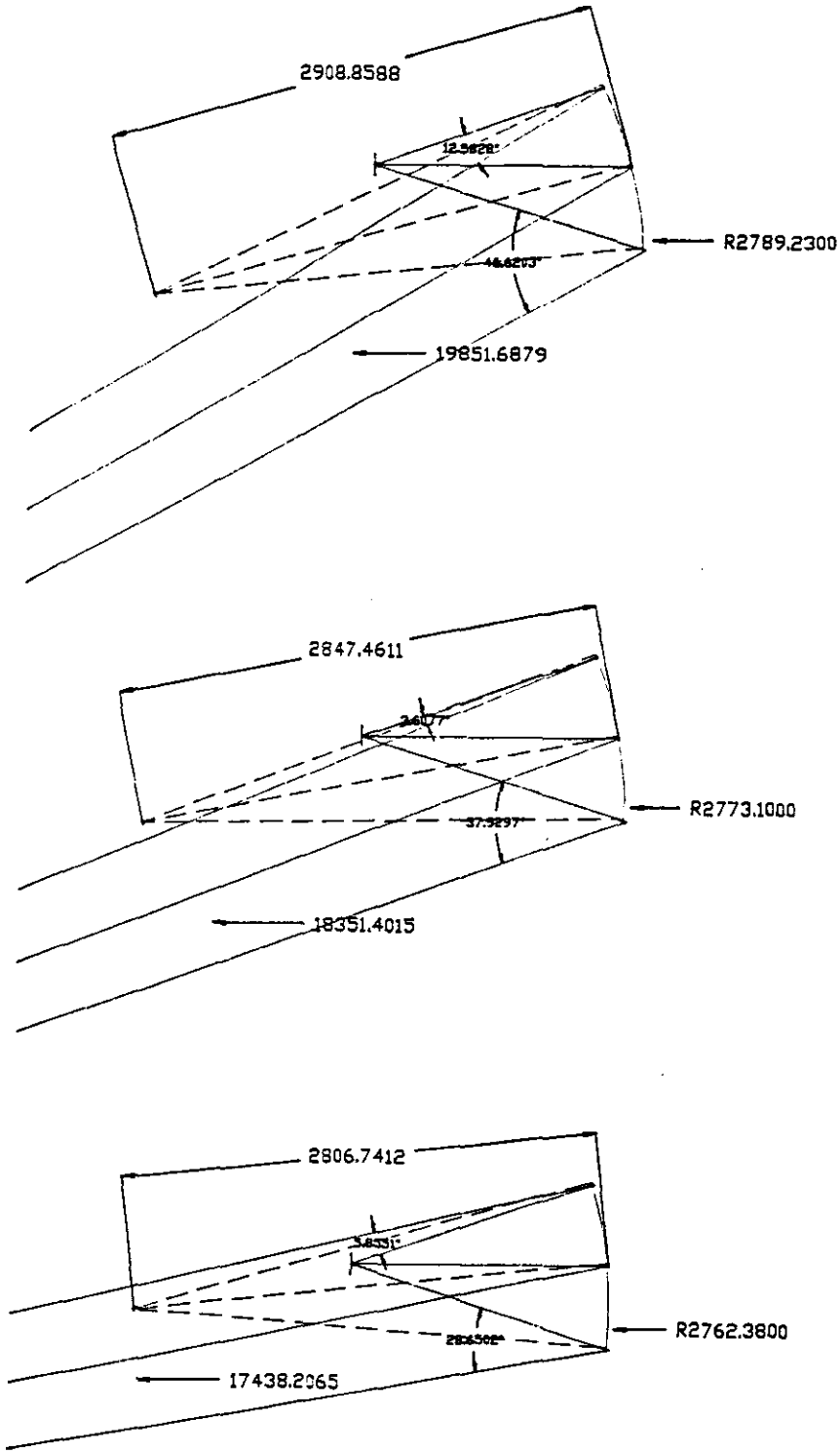
2908.8588
R2789.2300
19851.6879
2847.4611
R2773.1000
18351.4015
2806.7412
R2762.3800
17438.2065

FIG. 5

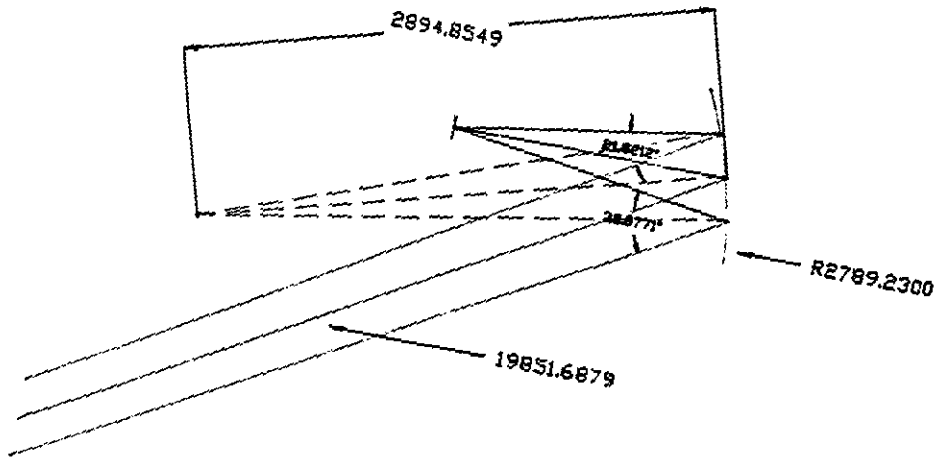
2894.8549
R2789.2300
19851.6879

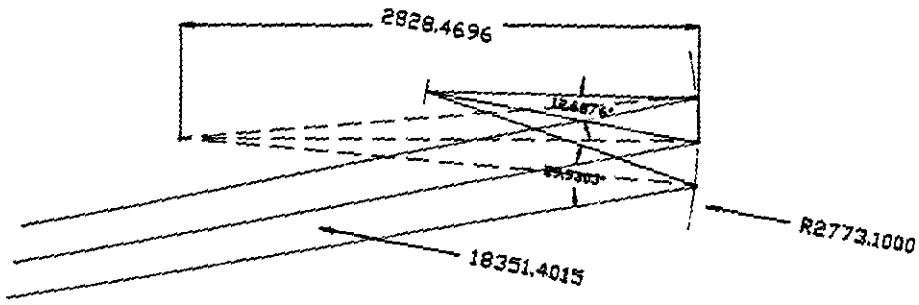
2828.4696
R2773.1000
18351.4015

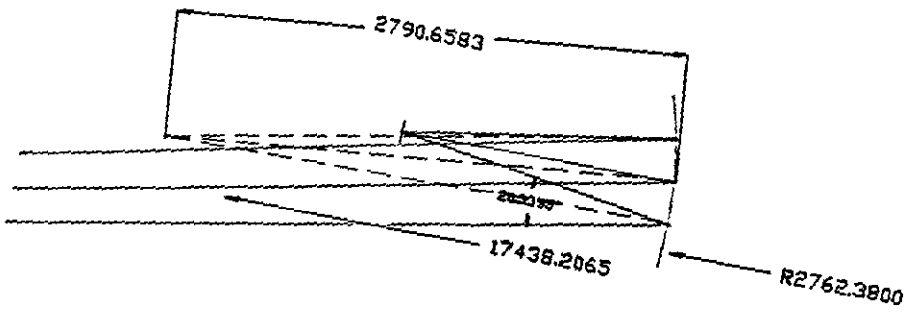
2790.6583
17438.2065
R2762.3800

FIG. 6

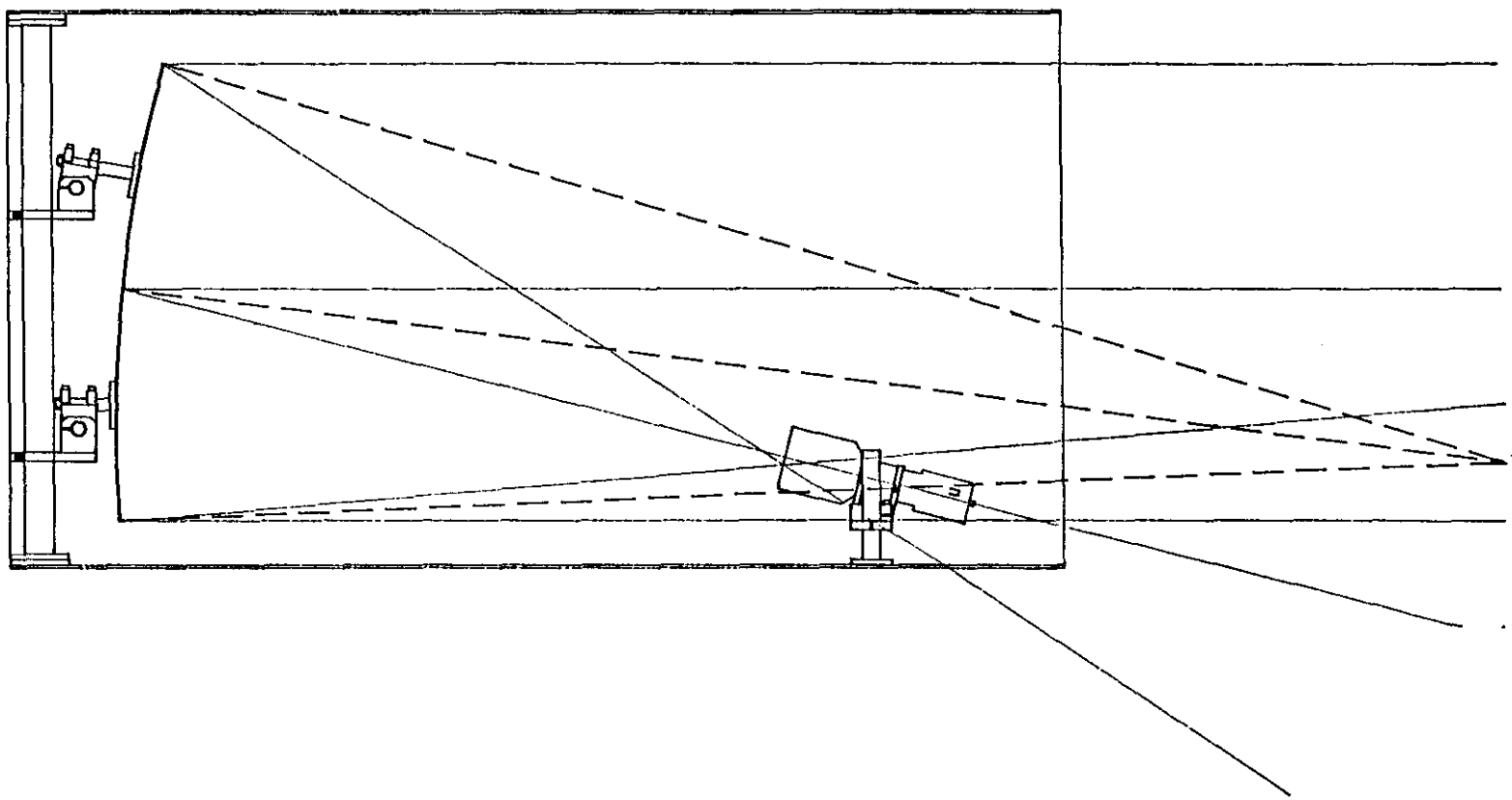

FIG. 7