Fermilab Library
0 1160 0052503 4

SDC-90-00089

SDC
SOLENOIDAL DETECTOR NOTES

SCINTILLATOR PLATE CALORIMETER COST SPREADSHEET

Tom Kirk

September 23, 1990

SCINTILLATOR PLATE CALORIM. COST SPREADSHEET SDC-90-000 31

HIGH ENERGY PHYSICS DIVISION TELECOMMUNICATION MESSAGE

Date: 9/23/90 No. of Pages to follow: _____

FROM: Tom Kirk

High Energy Physics Division
Argonne National Laboratory
FAX # (708)972-5782

TO: Richard Kadel
LBL Physics Div.
FAX: 415 486 5101

COMMENTS: Richard: Here are the 'economy models' agreed to. Model 'A' has ferromagnetic endcap calorim.; Model 'B' has Pb endcaps. Both barrels have Pb/Scin HAC1 & Fe/Scin HAC2. Tom

PS: Electronic Dwgs to be sent by Norm Hill.

Scintillator Plate Calorimeter Costs

Version: September 23, 1990 Endcap Geometrical Elements

T. Kirk

Parameter	Model 'A' RDK LOI	Model 'B' LOI	Model 'H' Cost Est	Model 'D' TK/JP LOI
Inner Face Half Length (M)	4.20	4.20	4.70	4.70
Endcaps, EM Section:				
Thickness (M)	0.27	0.27	0.27	0.27
Aver. Min. Radius (M)	0.44	0.44	0.49	0.49
Aver. Max. Radius (M)	1.70	2.12	2.27	2.27
Volume (M**3)	4.61	7.40	8.42	8.42
Aver. Density (Tons/M**3)	6.97	6.97	6.97	6.97
Total Weight (Tons)	32.16	51.58	58.68	58.68
Cum. Z-Pos. (M)	4.47	4.47	4.97	4.97
Endcaps, HAC1 Section:				
Thickness (M)	1.16	1.31	1.31	1.50
Aver. Min. Radius (M)	0.52	0.52	0.57	0.58
Aver. Max. Radius (M)	2.24	3.65	3.80	3.80
Volume (M**3)	34.74	107.58	116.32	133.26
Aver. Density (Tons/M**3)	7.27	9.02	9.02	9.02
Total Weight (Tons)	252.51	970.71	1049.61	1202.48
Cum. Z-Pos. (M)	5.64	5.78	6.28	6.48
Endcaps, HAC2 Section:				
Thickness (M)	0.83	0.90	0.90	0.73
Aver. Min. Radius (M)	0.62	0.64	0.69	0.70
Max. Radius (M)	3.65	3.65	3.80	3.80
Volume (M**3)	67.76	72.90	78.82	63.74
Aver. Density (Tons/M**3)	7.27	7.28	7.28	7.28
Total Weight (Tons)	492.47	530.97	574.09	464.23
Flux Return Factor @ B0=2.0 T	1.93	1.10	1.01	0.89
Fe Area Dilution Factor	0.92	0.92	0.92	0.92
Cum. Z-Pos. (M)	6.47	6.68	7.18	7.20
Endcaps, Fe Ring Section:				
Thickness (M)	2.50	2.71	2.71	2.73
Min. Radius (M)	3.65	3.65	3.80	3.80
Max. Radius (M)	4.49	4.49	4.64	4.54
Outer Slope - Dr/Dz	0.63	0.60	0.60	0.60
Volume (M**3)	77.67	85.25	88.43	81.33
Aver. Density (Tons/M**3)	7.87	7.87	7.87	7.87
Total Weight (Tons)	611.24	670.95	695.91	640.04
Endcaps, Fe Disk Section:				
Endcap Fe Disk Thickness (M)	0.50	0.50	0.50	0.50
Endcap Fe Disk Volume (M**3)	40.72	40.65	43.95	43.90
Endcap Fe Disk Weight (Tons)	320.47	319.91	345.89	345.52
Endcap Disk Length (lambda)	2.98	2.98	2.98	2.98
Cum. Z-Pos. (M)	6.97	7.18	7.68	7.70

Scintillator Plate Calorimeter Costs

Version: September 23, 1990 Barrel Geometrical Elements

T. Kirk

Parameter	Model 'A' RDK LOI	Model 'B' LOI	Model 'H' Cost Est	Model 'D' TK/JP LOI
Solenoid Current Sheet Radius (M)	1.81	1.81	1.96	1.96
Solenoid Current Sheet End (M)	4.47	3.85	4.35	4.35
Barrel, EM Section:				
Min. Half Length (M)	4.80	4.14	4.64	4.64
Min. Radius (M)	2.10	2.10	2.25	2.25
Max. Radius (M)	2.34	2.34	2.49	2.49
Inner Slope - Dr/Dz	0.43	0.54	0.51	0.51
Volume (M**3)	32.56	29.85	35.48	35.48
Aver. Density (Tons/M**3)	6.97	6.97	6.97	6.97
Total Weight (Tons)	226.97	208.05	247.34	247.34
Barrel, HAC1 Section:				
Min. Half Length (M)	5.58	4.40	4.90	4.90
Outer Cyl. Half Length (M)	5.58	4.40	4.90	4.90
Outer Slope - Dr/Dz	0.00	0.00	0.00	0.00
Inner Slope - Dr/Dz	0.00	0.00	0.00	0.00
Max. Half Length (M)	5.58	4.40	4.90	4.90
Min. Radius (M)	2.37	2.37	2.52	2.52
Radius @ Max. Length (M)				
Max. Radius (M)	3.65	3.65	3.80	3.80
Volume (M**3)	270.42	213.24	249.29	249.29
Aver. Density (Tons/M**3)	9.02	9.02	9.02	9.02
Total Weight (Tons)	2440.13	1924.11	2249.44	2249.44
Barrel, HAC2 Section:				
Half Length (M)	5.58	4.40	4.90	4.90
Outer Slope - Dr/Dz	0.00	0.00	0.00	0.00
Inner Slope - Dr/Dz	0.00	0.00	0.00	0.00
Max. Length (M)	5.58	4.40	4.90	4.90
Min. Radius (M)	3.65	3.65	3.80	3.80
Radius @ Max. Length (M)				
Max. Radius (M)	4.19	4.19	4.34	4.34
Volume (M**3)	148.78	117.31	135.64	135.64
Aver. Density (Tons/M**3)	7.27	7.27	7.27	7.27
Total Weight (Tons)	1081.29	852.63	985.82	985.82
Flux Return Factor @ B0=2.0 T	1.49	1.49	1.31	1.13
Fe Area Dilution Factor	0.92	0.92	0.92	0.92
Reluctance Ratio - (EM+HAC1)/Fe	0.03	0.03	0.03	0.04
Barrel, Fe Cylinder Section:				
Min. Radius (M)	4.19	4.19	4.34	4.34
Max. Radius (M)	4.49	4.49	4.64	4.54
Half Length (M)	5.58	4.40	4.90	4.90
Volume (M**3)	91.37	72.05	83.01	54.72
Weight (Tons)	719.11	567.04	653.29	430.68

Scintillator Plate Calorimeter Costs

Version: September 23, 1990 Overall Cost Elements
T. Kirk

Parameter	Model 'A' RDK LOI	Model 'B' LOI	Model 'H' Cost Est	Model 'D' TK/JP LOI
Barrel EM Volume (M**3)	32.56	29.85	35.48	35.48
Barrel HAC1 Volume (M**3)	270.42	213.24	249.29	249.29
Barrel HAC2 Volume (M**3)	148.78	117.31	135.64	135.64
Barrel Fe Cyl. Volume (M**3)	91.37	72.05	83.01	54.72
Barrel EM Weight (Tons)	226.97	208.05	247.34	247.34
Barrel HAC1 Weight (Tons)	2440.13	1924.11	2249.44	2249.44
Barrel HAC2 Weight (Tons)	1081.29	852.63	985.82	985.82
Barrel Fe Cyl. Weight (Tons)	719.11	567.04	653.29	430.68
Total Barrel Weight (Tons)	4467.50	3551.84	4135.89	3913.28
Endcaps EM Volume (M**3)	4.61	7.40	8.42	8.42
Endcaps HAC1 Volume (M**3)	34.74	107.58	116.32	133.26
Endcaps HAC2 Volume (M**3)	67.76	72.90	78.82	63.74
Endcaps Fe Ring Volume (M**3)	77.67	85.25	88.43	81.33
Endcaps Fe Disk Volume (M**3)	40.72	40.65	43.95	43.90
Endcaps EM Weight (Tons)	32.16	51.58	58.68	58.68
Endcaps HAC1 Weight (Tons)	252.51	970.71	1049.61	1202.46
Endcaps HAC2 Weight (Tons)	492.47	530.97	574.09	464.23
Endcaps Fe Ring Weight (Tons)	611.24	670.95	695.91	640.04
Endcaps Fe Disk Weight (Tons)	320.47	319.91	345.89	345.52
Total Endcaps Weight (Tons)	1708.86	2544.11	2724.18	2710.95
Total Calorimeter Wt. (Tons)	**6176**	**6096**	**6860**	**6624**
Barrel Absorber Cost ($M)	15.25	12.15	14.19	14.19
Barrel Scintillator Cost ($M)	34.59	32.39	36.03	33.20
Barrel Struc. Supp. Cost ($M)	2.00	2.00	2.00	2.00
Endcaps Absorber Cost ($M)	2.38	6.19	6.71	7.07
Endcaps Scintillator Cost ($M)	8.47	11.60	12.83	12.94
Endcaps Struc. Supp. Cost ($M)	4.00	4.00	4.00	4.00
Shr Max. Det. Optical Cost ($M)	3.78	3.60	3.68	2.86
Cal. Cost w/o Electr. ($M)	**70.46**	**71.94**	**79.44**	**76.26**
Total Electronics Cost ($M)	13.34	12.84	12.83	9.43
Total Fe Return Yoke Cost ($M)	3.30	3.12	3.39	2.83
Cal Cost Incl. Electr. ($M)	**87.10**	**87.90**	**95.66**	**88.52**
Overall Max. Radius (M)	**4.49**	**4.49**	**4.64**	**4.54**
Overall Half Length (M)	**6.97**	**7.18**	**7.68**	**7.70**
Cost w/o Electr. ($K/Ton)	**11.41**	**11.80**	**11.58**	**11.51**

Scintillator Plate Calorimeter Costs

Version: September 23, 1990 Cost Parameters - FY 91$

T. Kirk

Parameter	Model 'A' RDK LOI	Model 'B' LOI	Model 'H' Cost Est	Model 'D' TK/JP LOI
Passive Absorber Costs				
Barrel EM Abs. Fabr. ($K/Ton)	3.50	3.50	3.50	3.50
Barrel HAC1 Abs. Fabr. ($K/Ton)	3.50	3.50	3.50	3.50
Barrel HAC2 Abs. Fabr. ($K/Ton)	2.00	2.00	2.00	2.00
Endcap EM Abs. Fabr. ($K/Ton)	3.50	3.50	3.50	3.50
Endcap HAC1 Abs. Fabr. ($K/Ton)	2.00	3.50	3.50	3.50
Endcap HAC2 Abs. Fabr. ($K/Ton)	2.00	2.00	2.00	2.00
Structural Fe Fabr. ($K/Ton)	1.00	1.00	1.00	1.00
Module Ship & Install ($K/Ton)	1.00	1.00	1.00	1.00
Scintillator Costs				
Scin. Tile unit cost ($)	6.67	6.67	8.00	11.52
Fibre unit cost ($)	1.00	1.00	1.00	1.00
Tile Fabr. ($/tile)	5.00	5.00	6.00	8.64
Tile Map & Mask unit cost ($)	8.34	8.34	10.00	14.40
Total Tile unit cost ($)	21.02	21.02	25.00	35.56
B-Tower Fabr. unit cost ($)	2664.06	2664.06	3146.00	4423.76
B-Tower Route & Install ($)	225.00	225.00	225.00	225.00
B-Tower unit cost ($)	2889.06	2889.06	3371.00	4648.76
B-Tower PMT unit cost ($)	350	350	350	350
Total No. B-Towers	8064	7552	7552	5488
Total No. B-Tower PMT Chans.	32256	30208	30208	21952
Total B-Tower Cost ($M)	**34.59**	**32.39**	**36.03**	**33.20**
E-Tower Fabr. unit cost ($)	1673.29	2840.20	3354.00	5008.72
E-Tower Wrap & Install ($)	250.00	250.00	250.00	250.00
E-Tower unit cost ($)	1923.29	3090.20	3604.00	5258.72
E-Tower PMT unit cost ($)	350	350	350	350
Total No. E-Towers	3120	3646	3636	2685
Total No. E-Tower PMT Chans.	10561	11126	11086	8390
Total E-Tower Cost ($M)	**8.47**	**11.60**	**12.83**	**12.94**
Photon Transducer Costs				
PMT unit cost ($)	100.00	100.00	100.00	100.00
64-Anode PMT w/base ($)	4000.00	4000.00	4000.00	4000.00
PMT HV & Base unit cost ($)	200.00	200.00	200.00	200.00
PMT Calib. Sys. unit cost ($)	50.00	50.00	50.00	50.00
Electronics Costs				
Front-end Electr. unit cost ($)	25.00	25.00	25.00	25.00
Trig Signal Proc. unit cost ($)	50.00	50.00	50.00	50.00
Pwr & Sig. Routing unit cost ($)	25.00	25.00	25.00	25.00
Elec. Power unit cost ($)	100.00	100.00	100.00	100.00
Cooling unit cost ($)	25.00	25.00	25.00	25.00
Mechanical Items unit cost ($)	25.00	25.00	25.00	25.00
Signal & Trig. Proc. unit cost ($)	250.00	250.00	250.00	250.00
Total Electronics Cost ($M)	**13.34**	**12.84**	**12.83**	**9.43**

Scintillator Plate Calorimeter Costs

Version: September 23, 1990 Endcap Physical Parameters

T. Kirk

Parameter	Model 'A' RDK LOI	Model 'B' LOI	Model 'H' Cost Est	Model 'D' TK/JP LOI
Inner Face Half Length (M)	4.20	4.20	4.70	4.70
Inner Min. Radius (M)	0.43	0.43	0.48	0.48
Outer Min. Radius (M)	1.64	2.05	2.20	2.20
Inner Radius Slope - Dr/Dz	0.10	0.10	0.10	0.10
Outer Radius Slope - Dr/Dz	0.43	0.54	0.51	0.51
Av. Azi. Tower Width (Cm)	9.52	10.06	10.80	12.34
Av. Radial Tower Width (Cm)	9.52	10.06	10.80	12.34
Barrel Ext. Endcap Towers (No.)	640	1152	1152	784
Full Length Endcap Towers (No.)	2480	2494	2484	1901
Total Endcap Towers (No.)	3120	3646	3636	2685
Long. Segmentation (No.)	4	4	4	4
EM Depth (X0)	25.11	25.11	25.11	25.11
EM Depth (Lambda)	0.90	0.90	0.90	0.90
Absorber Xo (Cm)	0.56	0.56	0.56	0.56
Absorber Lambda (Cm)	17.09	17.09	17.09	17.09
No. Long. EM Cells	28	28	28	28
Scin. Plate Thickness (Cm)	0.25	0.25	0.25	0.25
Abs Plate Thickness (Cm)	0.50	0.50	0.50	0.50
Total Long. Cell Size (Cm)	0.85	0.85	0.85	0.85
Shower Max. Profile Detector:				
No. Scin. Elements per Tower	5	5	5	5
Scin. Element Thickness (Cm)	0.50	0.50	0.50	0.50
HAC1 Depth (Lambda)	6.45	6.09	6.09	7.01
Absorber Lambda (Cm)	16.77	17.09	17.09	17.09
No. Long. Had Cells	28	80	80	92
Scin. Plate Thickness (Cm)	0.25	0.25	0.25	0.25
Abs Plate Thickness (Cm)	3.81	1.25	1.25	1.25
Total Long. Cell Size (Cm)	4.16	1.60	1.60	1.60
HAC2 Depth (Lambda)	4.60	4.97	4.97	4.02
Absorber Lambda (Cm)	16.77	16.77	16.77	16.77
No. Long. Had Cells	20	21	21	17
Scin. Plate Thickness (Cm)	0.25	0.25	0.25	0.25
Abs Plate Thickness (Cm)	3.81	3.92	3.92	3.92
Total Long. Cell Size (Cm)	4.16	4.27	4.27	4.27
EM Abs. Density (Gm/Cm**3)	11.35	11.35	11.35	11.35
Aver. EM Density(T/M**3)	6.97	6.97	6.97	6.97
HAC1 Abs. Density (Gm/Cm**3)	7.87	11.35	11.35	11.35
Aver. HAC1 Density (T/M**3)	7.27	9.02	9.02	9.02
HAC2 Abs. Density (Gm/Cm**3)	7.87	7.87	7.87	7.87
Aver. HAC2 Density (T/M**3)	7.27	7.28	7.28	7.28

Scintillator Plate Calorimeter Costs

Version: September 23, 1990 Barrel Physical Parameters

T. Kirk

Parameter	Model 'A' RDK LOI	Model 'B' LOI	Model 'H' Cost Est	Model 'D' TK/JP LOI
Inner Radius (M)	2.10	2.10	2.25	2.25
Half Length (M)	4.80	4.14	4.64	4.64
End Matching Slope - Dr/Dz	0.43	0.54	0.51	0.51
Azimuthal Tower Segments (No.)	128	128	128	112
Azimuthal Tower Size (Radians)	0.05	0.05	0.05	0.06
Total Axial Tower Segments (No.)	63	59	59	49
Axial Tower Size (Rapidity)	0.05	0.05	0.05	0.06
Total Barrel Towers (No.)	8064	7552	7552	5488
Long. Segmentation (No.)	4	4	4	4
EM Depth (X0)	25.11	25.11	25.11	25.11
EM Depth (Lambda)	0.91	0.91	0.91	0.91
Absorber Xo (Cm)	0.56	0.56	0.56	0.56
Absorber Lambda (Cm)	17.09	17.09	17.09	17.09
No. Long. EM Cells	28	28	28	28
Scin. Plate Thickness (Cm)	0.25	0.25	0.25	0.25
Abs. Plate Thickness (Cm)	0.50	0.50	0.50	0.50
Total Long. Cell Size (Cm)	0.85	0.85	0.85	0.85
Shower Max. Profile Detector				
No. Scin. Elements per Tower	5	5	5	5
Scin. Element Thickness (Cm)	0.50	0.50	0.50	0.50
HAC1 Depth (Lambda)	6.10	6.10	6.10	6.10
Absorber Lambda (Cm)	17.09	17.09	17.09	17.09
No. Long. Had Cells	80	80	80	80
Scin. Plate Thickness (Cm)	0.25	0.25	0.25	0.25
Abs. Plate Thickness (Cm)	1.25	1.25	1.25	1.25
Total Long. Cell Size (Cm)	1.60	1.60	1.60	1.60
HAC2 Depth (Lambda)	2.99	2.99	2.99	2.99
Absorber Lambda (Cm)	16.77	16.77	16.77	16.77
No. Long. Had Cells	13	13	13	13
Scin. Plate Thickness (Cm)	0.25	0.25	0.25	0.25
Abs. Plate Thickness (Cm)	3.81	3.81	3.81	3.81
Total Long. Cell Size (Cm)	4.16	4.16	4.16	4.16
EM Abs. Density (Gm/Cm**3)	11.35	11.35	11.35	11.35
Aver. EM Density(T/M**3)	6.97	6.97	6.97	6.97
HAC1 Abs. Density (Gm/Cm**3)	11.35	11.35	11.35	11.35
Aver. HAC1 Density (T/M**3)	9.02	9.02	9.02	9.02
HAC2 Abs. Density (Gm/Cm**3)	7.87	7.87	7.87	7.87
Aver. HAC2 Density (T/M**3)	7.27	7.27	7.27	7.27

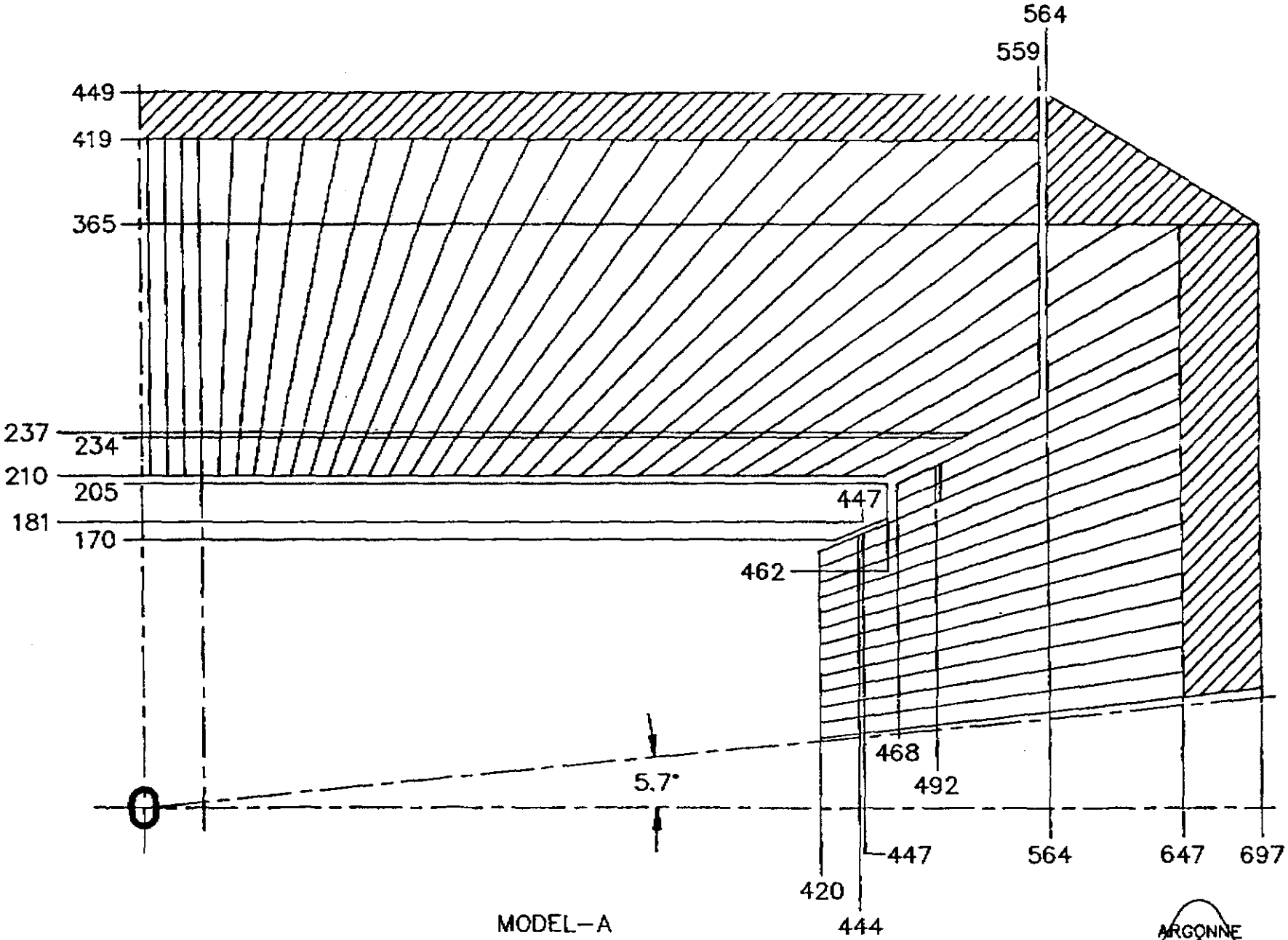

MODEL–A

ARGONNE NATIONAL LABORATORY

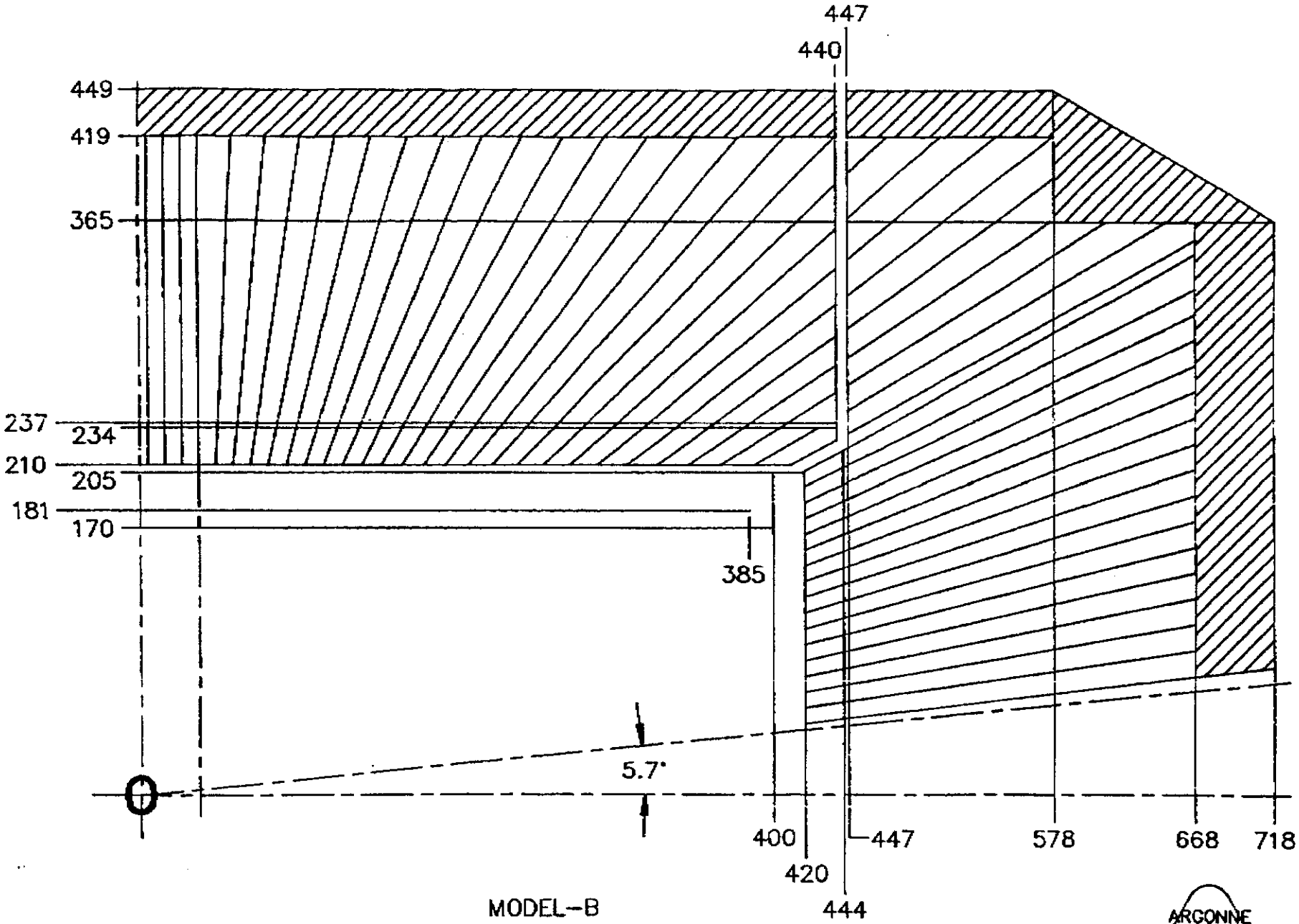

MODEL–B

ARGONNE NATIONAL LABORATORY