Fermilab Library
0 1160 0052477 1

SDC-90-00063

SDC
SOLENOIDAL DETECTOR NOTES

A GAS COOLED SIGNAL FEEDTHRU FOR SDC'S LAC CONCEPTUAL DESIGN

W. L. Pope

July 24, 1990

A GAS COOLED SIGNAL FEEDTHRU FOR SDC'S LAC *CONCEPTUAL DESIGN*

W.L. POPE
JULY 24, 1990

SCOPE OF THIS NOTE

Attached are a series of pictorial sketches of a gas cooled signal cable feedthru **conceptual design** which I feel addresses most of the important design "requirements" (goals) for this sub-system of the SDC's LAC. We have not yet gotten to the point whereby we can provide specific feedthru dimensions, but there is enough detail to begin a dialog on "requirements" and to change or upgrade these as applicable. My primary goal here is to identify any important feedthru functions which may have been overlooked, to obtain other constructive criticism, and, of course, to SIMPLIFY wherever possible.

INTRODUCTION

After a recent stint developing a Work Breakdown Structure (WBS) for SDC's LAC Calorimetry (Cryostats and Modules), I came to the conclusion that it would be useful to provide a more detailed level of definition to the LAC's gas cooled signal cable feedthru assemblies (GCSCFTA's), because:

1) they have an impact on the design of the cryostat's vacuum and LAr shells (i.e. port size and specific location, and they are likely to be a long-lead, special purchase item made to our detailed specifications),

2) how they are configured can have an impact on the Magnet's Return Iron location, Calorimeter Readout Electronics access, and the ability to install (or move) the Barrel Cryostat in the Return Iron (RI),

3) depending also upon how they're configured, they could have a serious negative impact on signal cable length for the Electrostatic Transformer (EST) readout option[1],

4) they impact the Cryogenic System.

Because of 1), 2), and 3), we need to discuss the issues very soon.

CONCEPTUAL DESIGN FEATURES

The SDC's LAC cryostat is being designed at KEK (Japan) and KHI (Kawasaki Heavy Industries. I will first describe how this GCSCFTA design addresses the forgoing "design goals" as they might apply to theKEK/KHI *Barrel* Cryostat. This design assumes that the GCSCFTA's are contained in a radial space between the RI's I.D. and the Cryostat's O.D.--other options will be explored if they, indeed offer, realistic assembly/access possibilities. This design concept also assumes the EST readout option (as opposed to the Magnetic Transformer (MT) readout option), because the EST has the most serious total cable length constraints, but the concept herein could be applied to either.

a) the design incorporates a relatively compact Right Angle Feature (RAF) in order to minimize space between the Barrel's Outer Vacuum Shell O.D. and the Return Iron I.D. to achieve a minimal impact on the size of external Detector systems (i.e. the Muon system) for given radial access dimensions,

b) the RAF allows the assembled Barrel Cryostat to be moved axially (relative to, say, the Return Iron)--or visa versa, by simply disconnecting the external cable connectors at the Electronics Boxes (which contain, for example, the Module Tower Stack pre-amps for the EST), and results in a GCSCFTA which has all its relatively easily damaged cryogenic fluid lines within the Return Iron enclosure. The feedthrus' coolant gas flow control valve(s) can be located at a common manifold, which can also be enclosed, to minimize damage and tampering,

c) the GCSCFTA design permits relatively large (the order of 1 inch) "thermal excursions" (both radial and axial) due to differential thermal expansion between the Barrel cryostat's outer LAr shell and it's outer vacuum shell without exposing either the shells or GCSCFTA components to potentially damaging stress/strain levels,

d) the GCSCFTA design includes a relatively short and simple-to-construct cable-to-coolant heat exchanger section, which, with a suitable area-to-length ratio (TBD), will achieve a high level of thermal performance in it's (solid conduction) heat intercept function, even though the (roughly 2000) wires are electrically (and thermally) "isolated" from the gas coolant with, say, Kapton or Teflon insulation.

e) finally, the design includes a "fail safe" feature such that, if a cold feedthru plate pin fails (we will have roughly 300 k cold pins in the SDC LAC), **and** the pressure in the feedthru enclosure rises above a pre-selected level, the pin leakage gas flows safely out through the GCSCFTA's built-in relief valve to external local atmosphere, without causing a ***potentially very serious*** cryostat loss of vacuum. (If a single cold pin leaks excessively on the SLD feedthrus, they *could be* "out of business"[2])

If the pin leakage, on this GCSCFTA design concept, is small enough to not activate the safety relief valve, **and** the coolant gas is Ar, it passes through the heat exchanger, and is routed back to the LAr Conditioner where it simply re-condenses--without contamination (see Coolant Gas Selection).

If an entire cold feedthru plate fails, we're out of business--like everyone else.

CONCEPTUAL DESIGN SKETCHES

The selection of the coolant gas involves a number of potential compromises and limitations--properly "conditioned" Ar(g) is *unavailable*. I will first describe the physical feedthru, and then discuss source gas issues.

Figure 1 is a sketch (not to scale) of the various GCSCFTA's internal and external details. For the Endcap's feedthrus, the design would be a simple, straight cylindrical assembly with similar interior seal/cooling features.

The assembly consists of three relatively simple sub-assemblies:

1) the Cold Feedthru Closure Assembly (see also **Figures 2** and **3**),

2) the Gas Cooled Cable/Tube Assembly (see **Figure 4**),

3) the Feedthru Gas Box (see **Figure 5**),

and if built this way, would look externally as shown in **Figure 6**.

The GCSCFTA (**Figure 1**) functions as follows. Cold coolant gas enters the inlet line, proceeds to beneath the Kel-F O-ring sealed plate, and enters the "bottom" of the Gas Cooled Cable/Tube Assembly. The gas flows at low Reynold's numbers (laminar flow) through the very small, triangular shaped, multiple parallel passage "ducts" of this Assembly, in near perfect heat exchange (approaching assumtotic Nusselt number conditions for the gas duct) with the insulated wires, transforming a large portion of the solid conduction from the feedthru cable's warm end into sensible heat gain in the coolant, which exits at about 300K.

The heat exchanger portion of this Assembly performs much the same as in gas cooled, high current leads in magnet applications[3], except that the local I^2R heat generation is zero. However, the cold-end heat conduction is not zero.

In addition, unless the gas temperature on the outside of the feedthru plate is less than or equal to the local LAr temperature on the other side, there will be conduction through the pins which can cause local boiling (thus generating numerous, highly objectionable vapor bubbles in the cryostat's LAr). Bob Watt's LN_2 circuit on the outer LAr shell would remove **none** of this local conductive heat leakage.

Consequently, the length (area-to-length ratio) of the Gas Cooled Cable/Tube Assembly will be selected (with a "current lead like" simulation/optimization) to minimize the exchanger's cold end heat leak at zero current,. and the entering coolant will be below *about 85K*. We will further take advantage of prior art by using Manganin wire as the conductor in this Assembly.

Figure 2 shows the Cold Feedthru Closure. This assembly consists of a commercially fabricated (but probably custom design[4]) cryogenic feedthru plate of the highest obtainable quality, a Kovar-to-Stainless Steel section, a commercial Aluminum-to-Stainless tubular transition, and a very flexible, welded-nested-ripple type Stainless Steel bellows. The bellows provides protection for the Cryostat's vacuum region in the event of a cold pin failure, and of course, deforms at low stress in response to thermal contractions of the LAr vessel.

Figure 3 shows the assembly step of welding the Closure to the LAr shell. This operation is performed after the header pins from the Module Cable Bundle are connected (preferably soft soldered) at the inside face of the cryogenic Feedthru Plate (the connection made from outside the vacuum vessel). To allow more space for the welding operation, the bellows is compressed and suitably clamped out of the way (insufficient space is probably shown--Rich Weidenbach will lay this out to scale once we develop a picture of a suitable 2000 pin connector).

After **all** vessel Closures are welded, the Barrel's LAr vessel heads are installed, and the Feedthru Closures' welds (etc, etc) are vacuum leak checked.

Figure 4 shows the foam insulated Cable/Tube Assembly (heat exchanger), its front seal plate (which would be sealed to the Closure with a Kel-F O-ring or one of the several types of metal sheathed, coil spring type seals, like "Helicoflex", for example), its feedthru headers, and the gas inlet tube.

Figure 5 shows the Feedthru Gas Box, which is installed over the previous stuff, is rubber O-ring sealed to the Barrel's Vacuum Shell, and has a large (also rubber O-ring sealed) top opening for making-up the internal gas line connections.

Finally, **Figure 6** is sketch of the way the Assembly interfaces with the Return Iron and the Readout Electronics Box. To move the Barrel relative to the Return Iron, there would be *about* 1-2 inches of radial clearance outside the feedthru boxes, and the External Cables would be disconnected at the "bottom" of the Electronics Boxes.

Note that there are no "flakey home-built" seals or "packings" of questionable reliability in the GCSCFTA just described. If a carefully specked purchased component (sub-assembly) fails, we let DOE's lawyers solve the problems.

COOLANT GAS SELECTION

Selection of the Feedthru's coolant gas involves a number of thorny compromises. The problems are not at all related to the relative "goodness" of one gas vs *others in its heat transfer "effectiveness"--Argon is as "good" as* N_2. *The problems* consist of gas supply temperature, treatment, and disposal--i.e. logistics stuff: a) what are the source conditions? b) how is the gas circulated? and, c) how is it purified or disposed of ?

I see three ***potential options*** in the present SDC Cryogenic System (see **Figure 7**), but only one workable option:

1) Open Circuit--the coolant is N_2 at, say, ≤ 84K and a regulated pressure of *about* 20 psig, routed from the gas side of the 20,000 Li local LN_2 supply tank to the Feedthru's heat exchanger. It is vented (dumped) thru the N_2 vent stack at about 5 to 10 psig and 300K,

2) Closed, forced convection circuit--the coolant is Ar(g) at ≈ 84K from the gas side of the LAr storage tank at ≤10 psig. The gas would be compressed to about 30 psig (*new system)*, cleaned in *another appropriate new purifier system*, routed to the Feedthru's heat exchanger (in an insulated line), and returned to the LAr conditioner tank at 300K and a regulated pressure of about 10 psig, where it recondenses to remain in the closed LAr system.

3) Closed, natural convection circulation--the coolant is sub-cooled LAr, initially at about 35 psig and 84K (from the bottom of the Barrel cryostat). The LAr passes through a low pressure liquid check valve, is partially vaporized (exit quality ≈ 0.9) with a suitable heater, routed at 84K (in an insulated line) to the Feedthru's heat exchanger, and returned to the vapor side of the LAr conditioner at 300K, where it recondenses as in 2).

Because of the unavailability of suitably conditioned Ar in our system, **Option 1** appears to be the only acceptable "option" of those listed above. It is clearly the simplest alternative to implement in our GCSCFTA's. However, if a pin leaks, there is a possibility of N_2 contamination (back diffusion) into the LAr system.

"Option 2" avoids the "contamination" potential at the feedthru--but with much added complexity elsewhere, and with very marginal feedthru inlet gas temperature conditions. Compressors also introduce contaminants, and the best purifiers are not

perfect. We should anticipate some long term contamination in the LAr system if this option were selected.

"Option 3" might look reasonable to the uninitiated, but it has similarly marginal inlet temperature conditions as "Option 2", and it is loaded with potential instability problems[5,6,7,8,9,10] which I don't know how to avoid. Even if the instabilities can be circumvented, we would have to be certain that there would be no back circulation of Ar gas bubbles into the bottom of the cryostat. The gas bubble problem *might be avoided* if the line from the "bottom" of the cryostat originated near the bottom of the LAr Conditioner tank above it.

CONCLUSIONS

The GCSCFTA design described above, utilizing ≤ 84K N_2 gas as a coolant, appears to satisfy all our needs, and is relatively simple and inexpensive. There are definite implied implications on the location of the Return Iron and the size of the Muon System, which we should discuss.

I'm particularly interested in what others think, so let's talk about it. As soon as we have a radially compact, to-scale layout of the GCSCFTA, we'll distribute prints.

REFERENCES

1 G. S. Abrams, Electrostatic Transformer Readout for SDC LAC, presented at the SDC's Snowmass Meeting, July 2, 1990.

2 R. Bell, SLAC, private communication, June 6, 1989.

3 M. N. Wilson, "Superconducting Magnets", Chapter 11, Clarendon Press, Oxford, 1986.

4 Y. Unno, KEK, private E-Mail communication, 7/25/90

5 S. K. Morgan & H. F. Brady, "Elimination of the Geysering Effect in Missiles", Advances in Cryogenic Engineering, Vol. 7, 1961.

6 P. S. Larson & J. A. Clark, et al, "Cooling of Cryogenic Liquids by Gas Injection", Advances in Cryogenic Engineering, Vol. 8, 1962.

7 A. F. Schmidt, "Experimental Investigation of Liquid-Hydrogen Cooling by Helium Gas Injection", Advances in Cryogenic Engineering, Vol. 8, 1962.

8 H. F. Trucks & W. O. Randolph, "Analytical and Experimental Investigation of Thermal and Helium Lift-Pumping Recirculating Systems", Advances in Cryogenic Engineering, Vol. 10, 1964.

9 D. W. Murphy, "An Experimental Investigation of Geysering in Vertical Tubes", Advances in Cryogenic Engineering, Vol. 10, 1964.

10 L. S. Tong, Boiling Heat Transfer and Two-Phase Flow, John Wiley & Sons, Inc. New York, 1965.

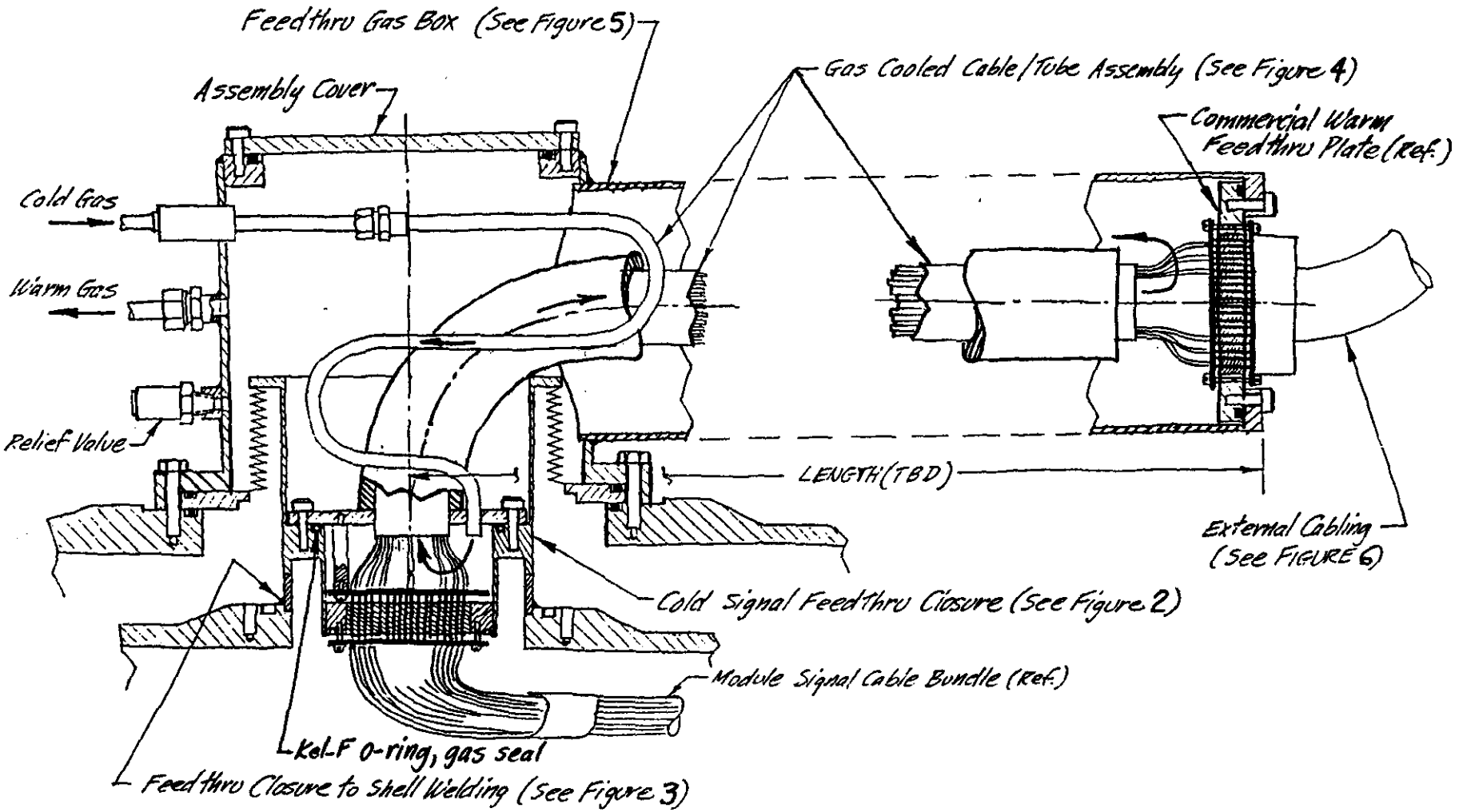

FIGURE 1 Gas Cooled Signal Cable Feedthru/Termination

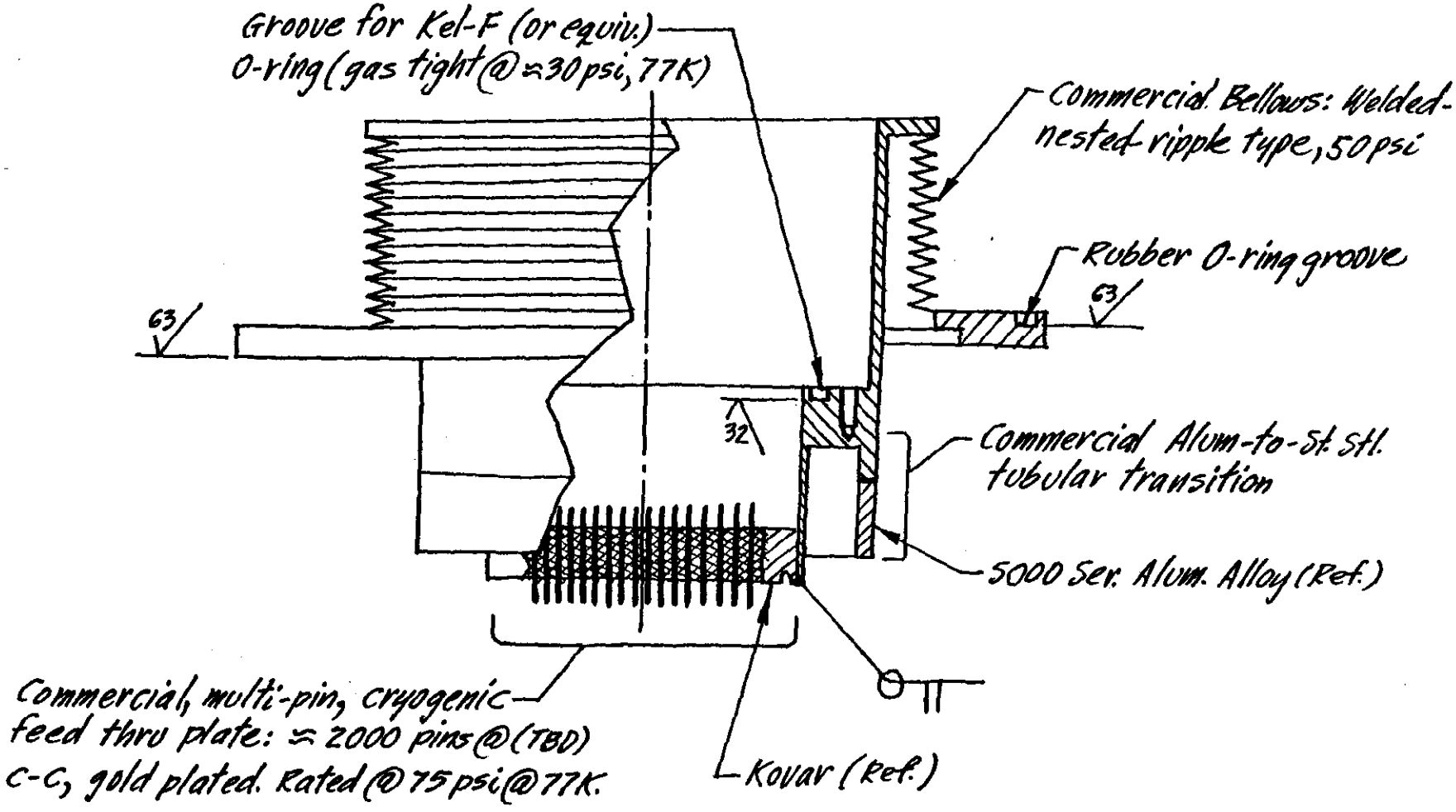

FIGURE 2 LAr Shell Cold Signal Feedthru Closure

- All materials: 300 ser. st. stl. unless noted otherwise
- All joints vacuum tight " " "
- All machining: 125 RMS " " "

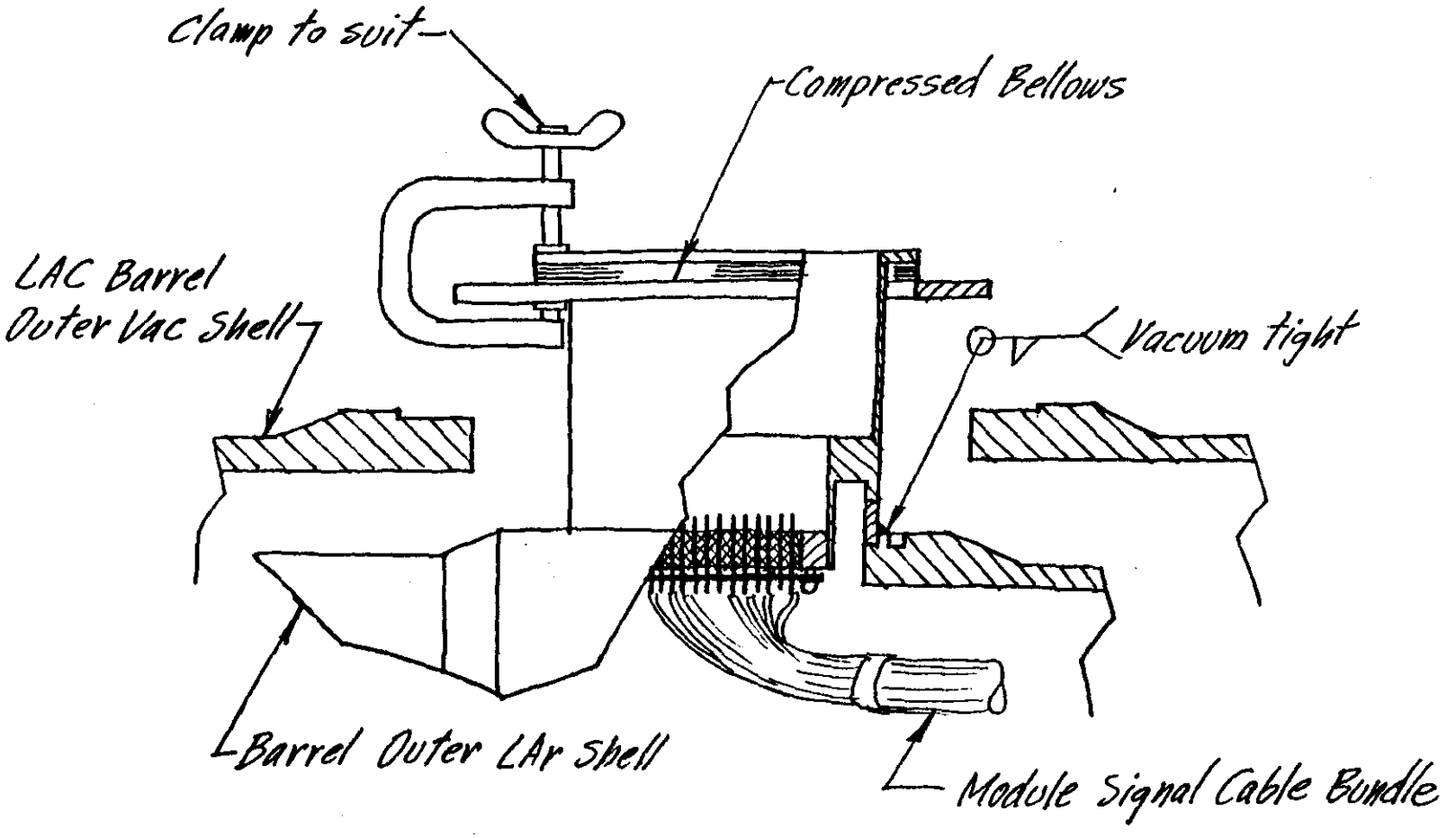

FIGURE 3 Feedthru Closure to Shell Welding

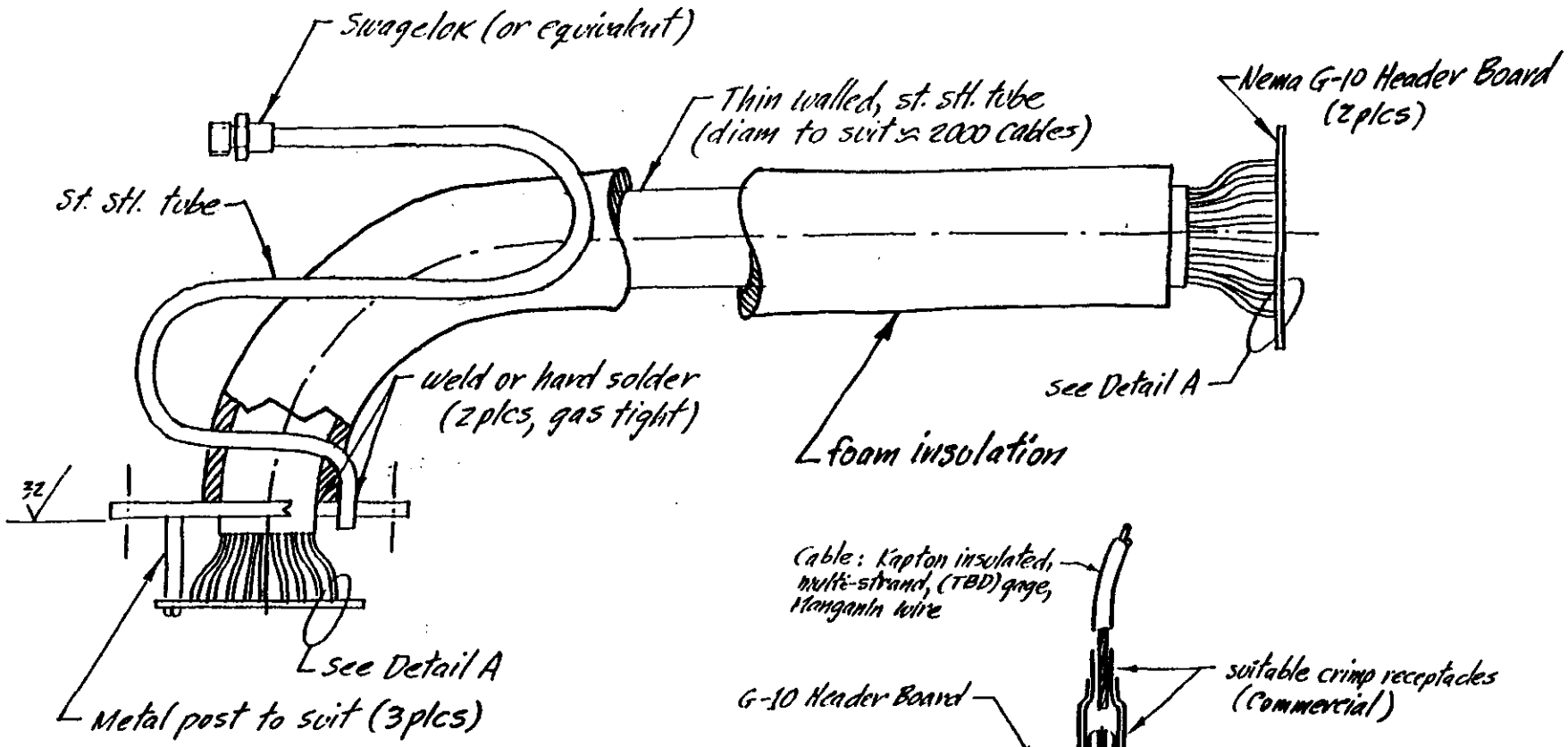

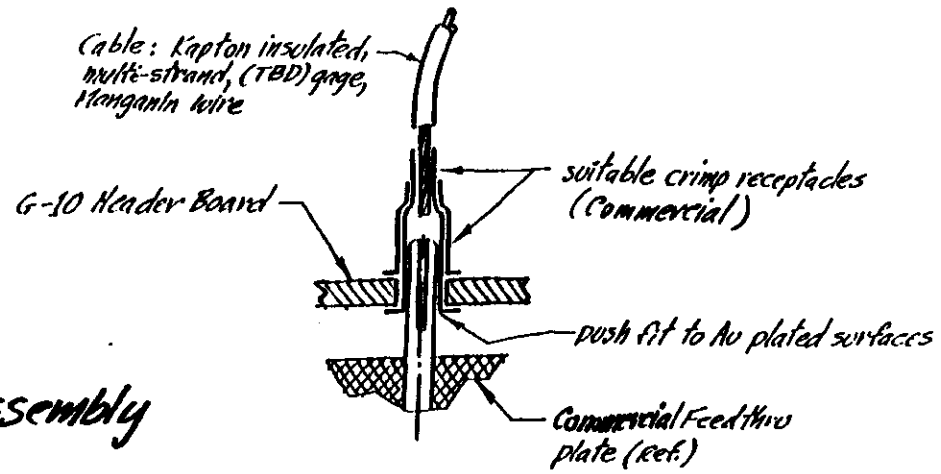

DETAIL A
Cable Termination SCHEMATIC

FIGURE 4 Gas Cooled Cable/Tube Assembly

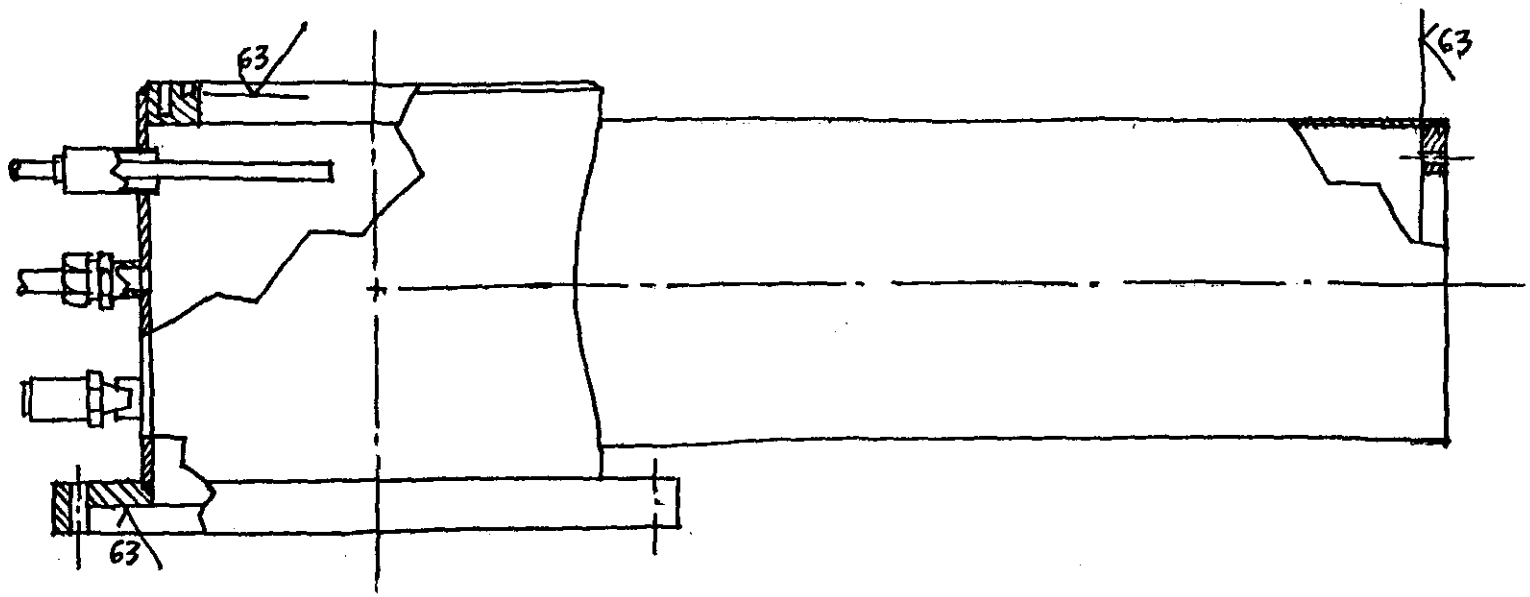

FIGURE 5 Feedthru Gas Box (A welded assembly of 300 Series stainless steel tube and plate)

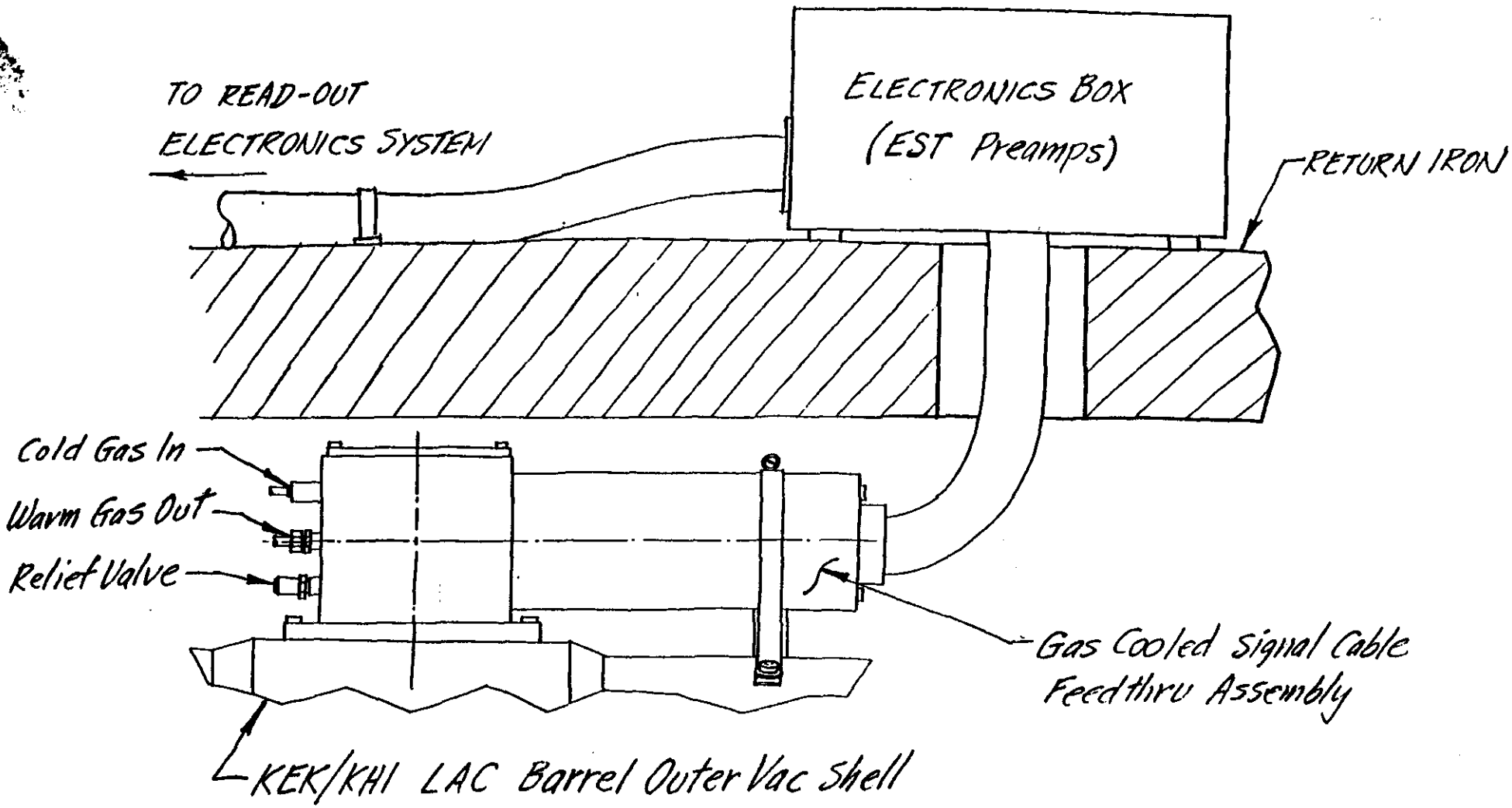

FIGURE 6 GAS COOLED SIGNAL CABLE ASS'Y (EXTERNAL INTERFACE)
(Right Angle Version for LAC Barrel)

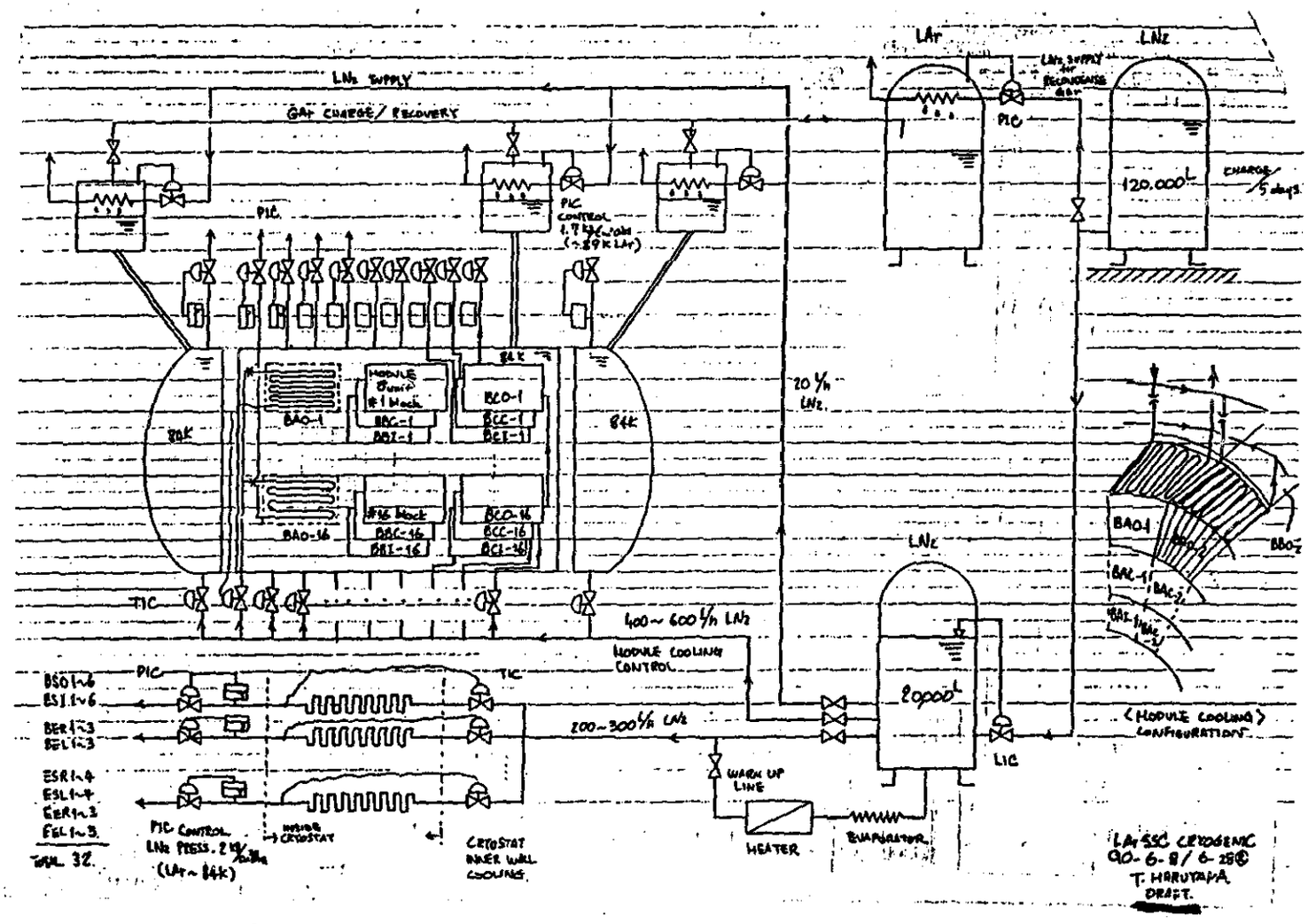

FIGURE 7 (Temporary)