Fermilab Library
0 1160 0052471 4

SDC-90-00057

SDC
SOLENOIDAL DETECTOR NOTES

PROGRESS REPORT ON 4MM STRAW CHAMBERS

Harold Ogren

May 29, 1990

May 29, 1990
IUHEP-90-9

Progress Report on 4 mm Straw Chambers

Harold Ogren
Indiana University
Bloomington , IN 47405

Introduction

Cylindrical drift chambers made with wound mylar cathodes (Straw Chambers) were developed almost a decade ago. I am going to report on recent developments i in the design of these chambers for an SSC detector. This work was carried out at Indiana University under an SSC R&D grant and as part of the Central and Forward Tracking with Wire Chambers Subsystem group [1]

The central tracking system for SDC

The central wire tracking chamber for the SDC will consist of 8 superlayers. Each superlayer consists of two cylindrical sections 3 meters in length. Each superlayer contains 8 layers of straws. The inner radius is 0.7 meters, the outer is 1.8 meters. One quarter of the tracking system is shown in Fig. 1.

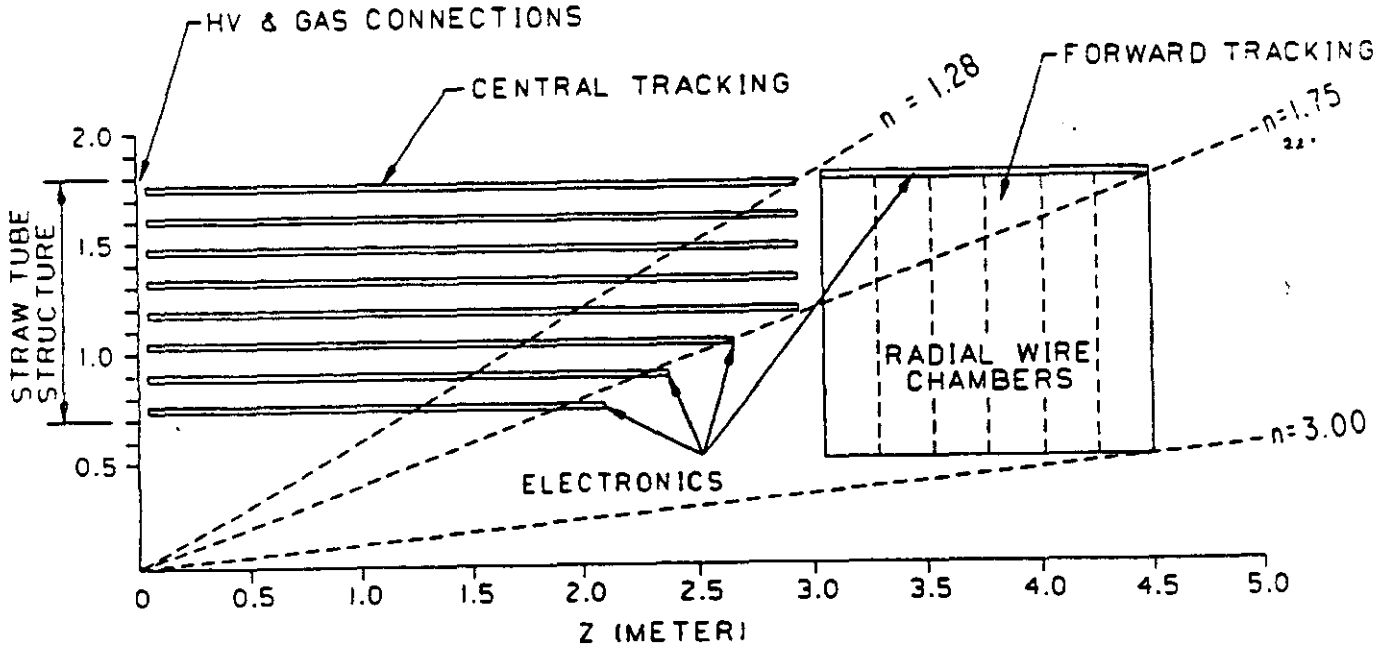

Fig. 1. Possible layout of SDC central wire tracking system

In Fig. 2 we see the end view of the central wire tracking chamber and the the eight super layers. The superlayers are constructed from a ring of identical modules, holding up to 256 straws. Four of the superlayers are stereo and four are axial. The stereo layers are formed by orienting a module of straws at a 3 degree angle. (The modules (and straws) are kept straight).
The total number of module will be about 544*2.
Since straws type detectors have been used in a number of experiments in the past ten years, the primary task is to define the mechanical specification for the superlayers, modules, and straws, and to integrate the system with the silicon tracker.

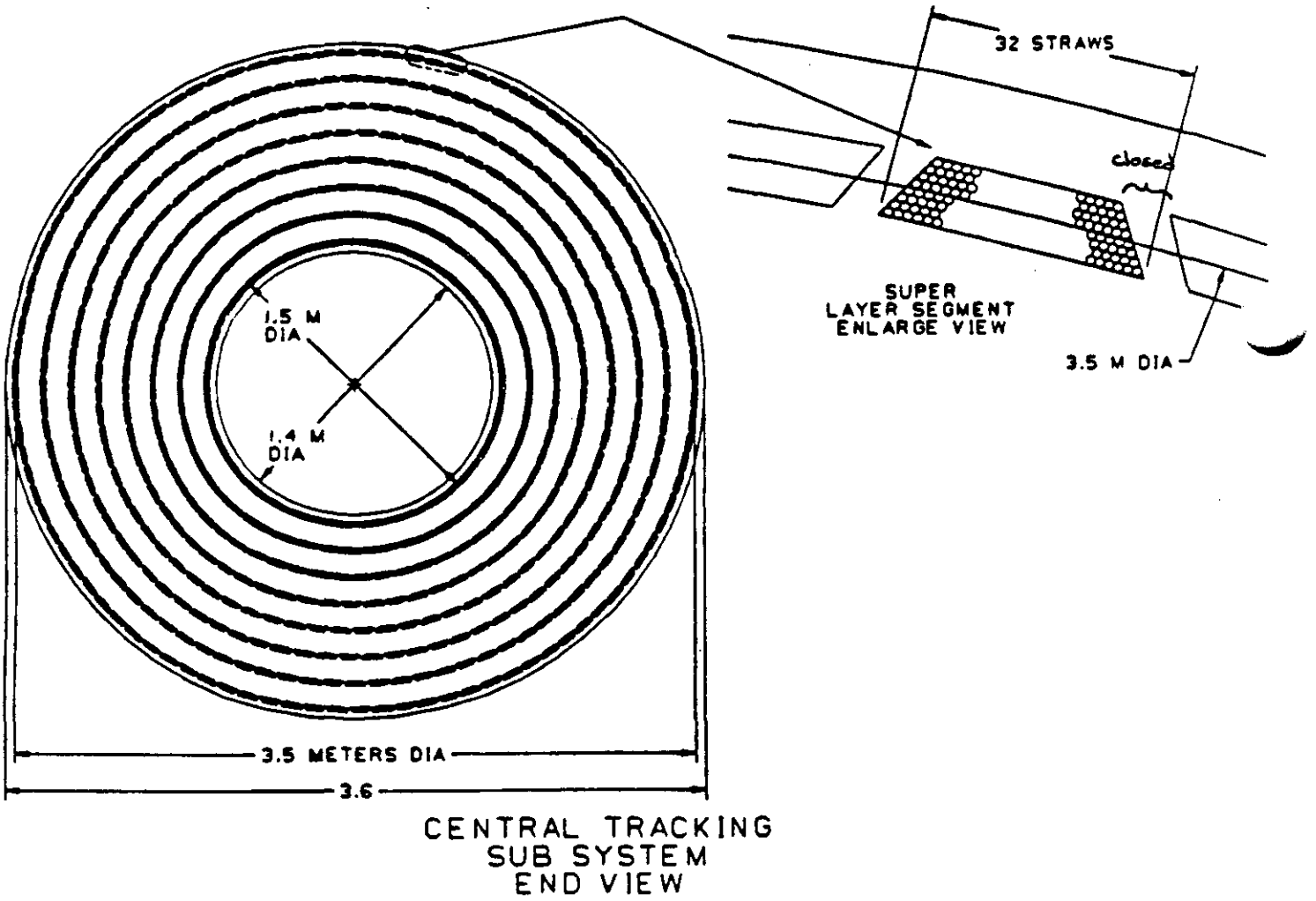

Fig. 2. End View of central wire tracker with detail of a module

The SSC Environment

The hit rate, current draw, occupancy, and charge/unit length were calculated using the rates predicted by D. Groom at a nominal luminosity of 10^{33} cm $^{-2}$ sec $^{-1}$. They are shown in Fig. 3 a,b and Fig. 4 a,b. The effects of the magnetic field (loopers) will increase these predictions at intermediate radii and decease them for the larger radii, however these the general dependance and are a valuable guide for chamber construction. The current draw for each straw may be the limiting feature for the operation at SSC. It s principally for this reason that the straws are split into two sections axially.

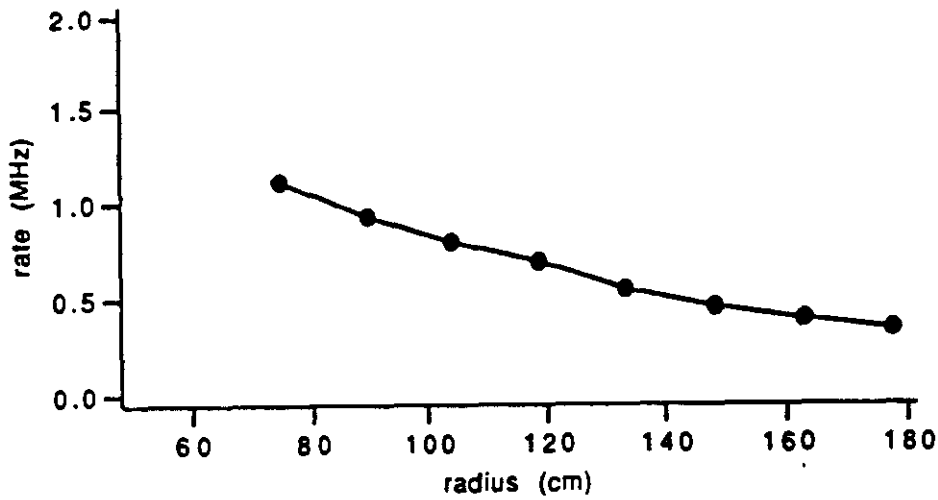

a

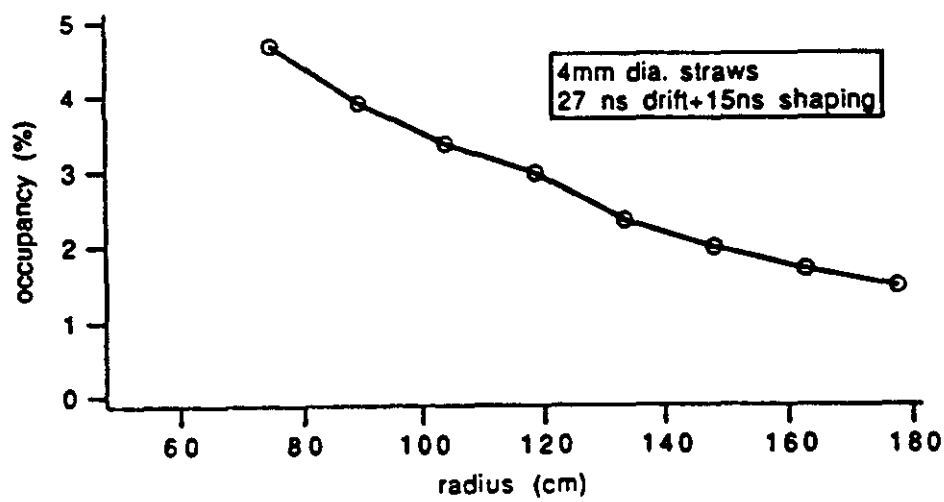

b

Fig. 3. a)The hit rate per wire and b) occupancy versus superlayer radius

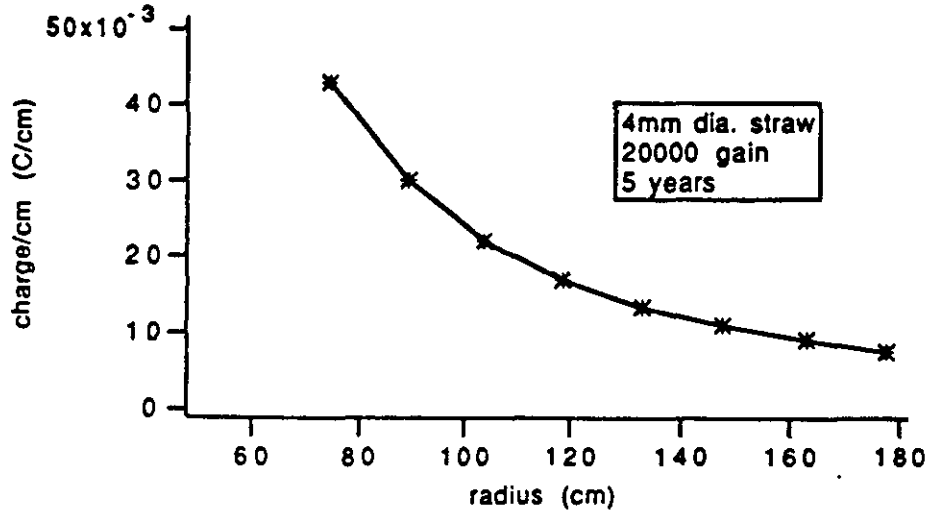

a

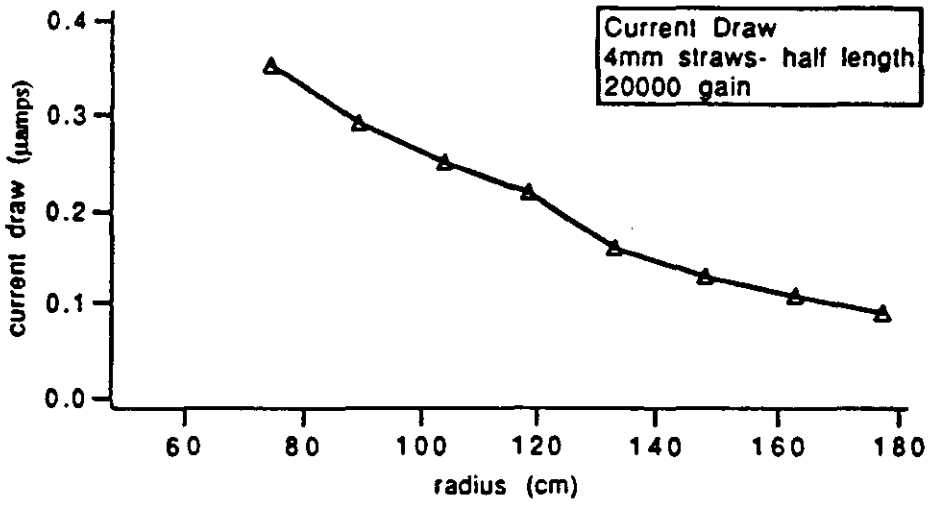

b

Fig. 4. a) The charge per centimeter and b) current draw versus radius

Modular Design Aspects

We are interested in the design of modular systems for the SSC. We believe that there are several compelling reasons for this:

1) Alignment
- The module's cross section stability aligns the straws internally
- The support structure maintains the modules in position.

2) Compressional Loading
- The compressional loading due to the wire tension (12 Kg for 256 wires) is taken up entirely by the external module.
- Since the module takes up the compression, the end support structure can be very light.

3) Mass Production
- The 240,000 channels of drift tubes is much larger number of wires than past detectors. With a modular approach the 1088 identical modules can be built by industry.
- Endplate design is simplified, HV, gas, electronics card are all identical.

4) Testing
- Each module can be tested, calibrated, and measure before assembly.
- HV and gas tests can be completed before assembly.
- The completed electronics and trigger can be tested before assembly.

5) Repair
- Modules can be repaired both before and after assembly.
- Modules can be replaced during major shutdown periods.

Module construction

As part of our SSC Tracking Subsystem development, we are planning on constructing several smaller modules this summer. The purpose of these smaller test modules is to determine the multi-straw alignment, to workout an endplate design, to begin to understand construction techniques with carbon fiber composites, and to investigate integration of the electronics in the modular design. The first modules will be about 1 meter in length. Fig. 5 shows a endview of a 64 straw prototype chamber.

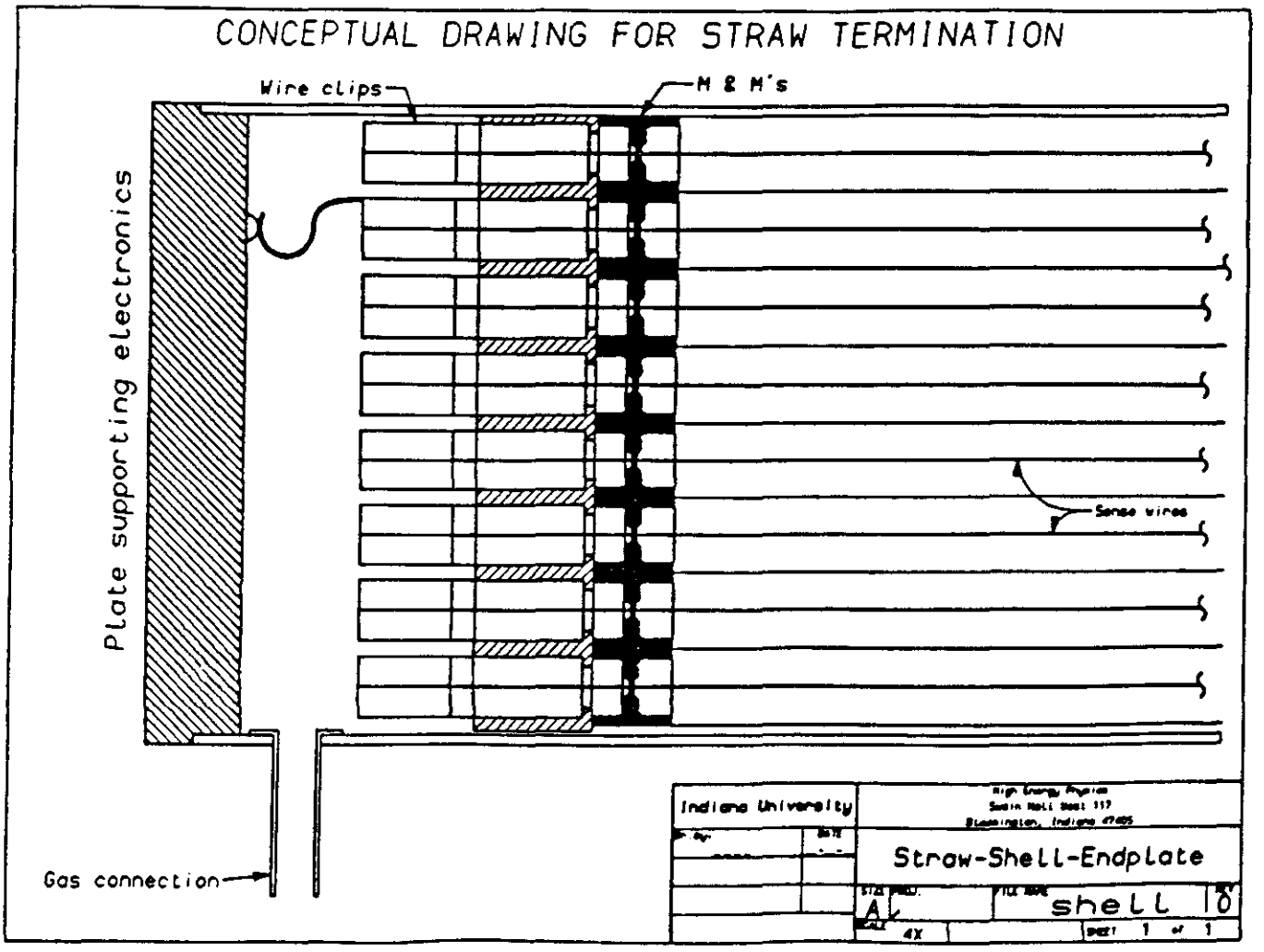

Fig. 5. Side view of a possible small straw test module

We are trying to workout a minimal mass design for the modules . One possibility is to slightly compress the wire supports with the outer shell in order to set the straw spacings. In this case the endplate provides the wire tension, but does not have to position the wire accurately. We have several preliminary designs that utilize this idea. The sideview, showing the end cap and wire attachment pin are shown in Fig. 6. Details of the endplate and the wire connection pin are shown in Fig. 7, and Fig. 8.

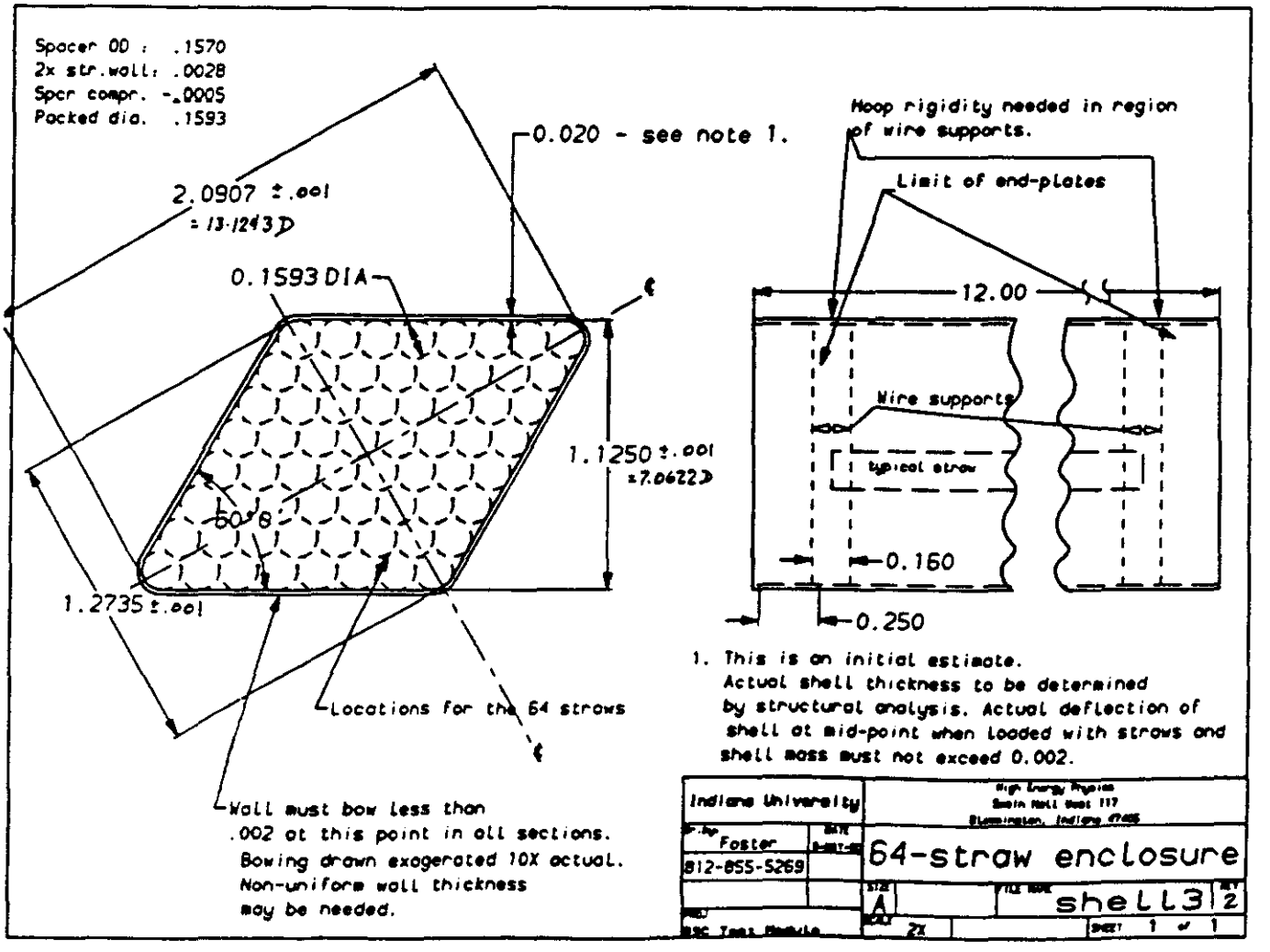

Fig. 6. End view of a possible 64 straw test module

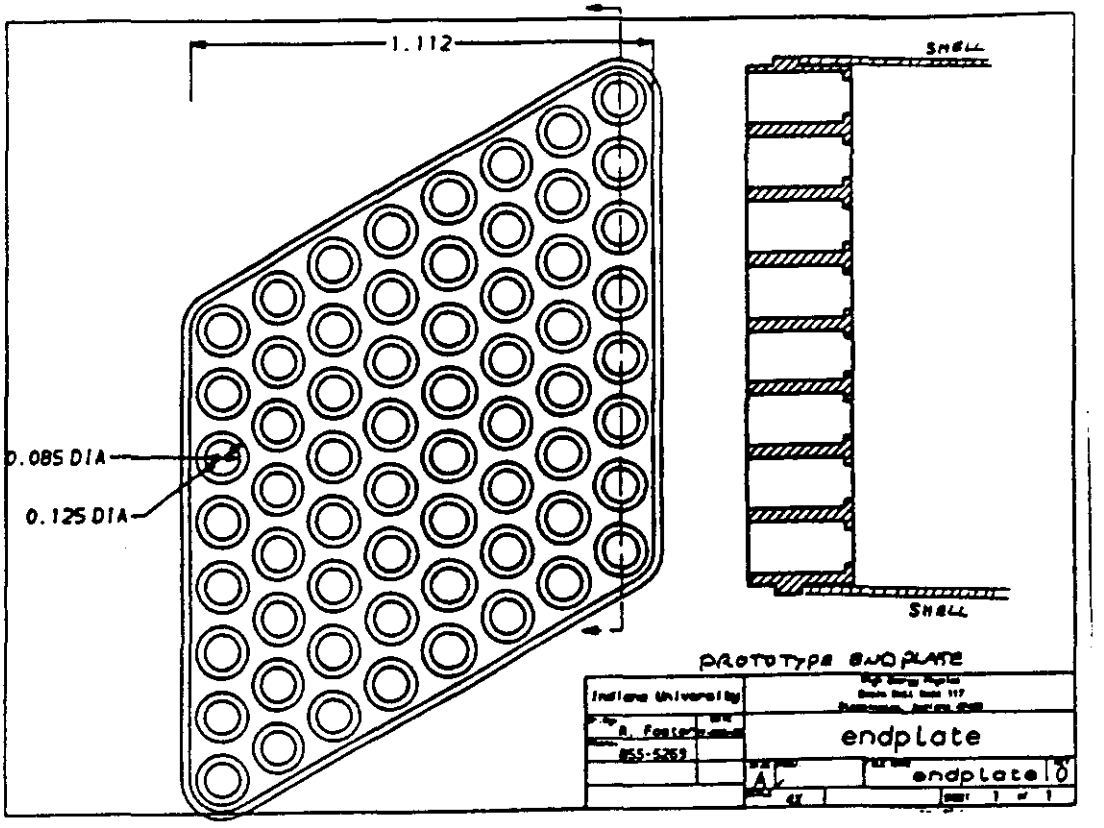

Fig. 7. End view of an endplate for a 64 straw module

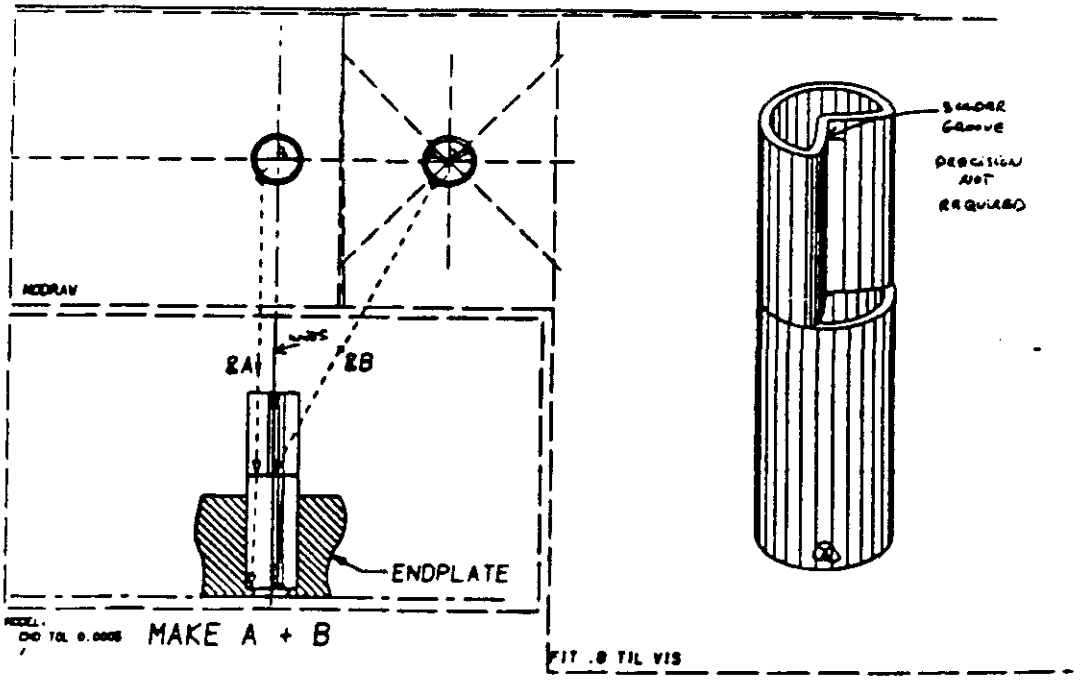

Fig. 8. A possible wire fastener for the 64 straw endplate

Basic straw cell, design

The straws we are presently using are 2 meters long.[2] Construction of 3 meter straws is not thought to be a problem. The general method is shown in Fig. 9. Two thin films are wound on a precision mandrel. The straws we are using are made with an aluminized (1000A) polycarbonate layer and an outer wrap of mylar. Both films are 12 microns thick.

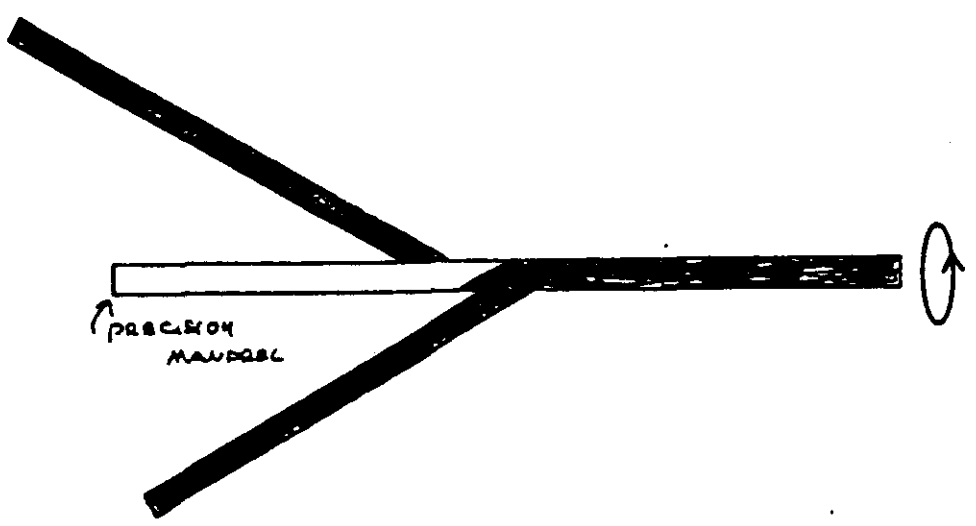

Fig. 9. Schematic of straw construction

Some of the R&D areas we are working on are fabrication of thinner straws, investigating other materials such as Kapton, and increasing the metallic coating to reduce the cathode resistance.

Electrostatic stability

One of the original uncertainties for straw construction was electrostatic stability. This is now well understood.[3] We, and others, have calculated the wire displacement as a function of offset as shown in the figure. Our conclusion is that for 4 mm diameter straws with 25 micron wire and 50 micron construction and alignment accuracy, we will need wire supports about every 80 cm at 2000 volts. The stability plot is shown in Fig. 10. This shows the electrostatic deflection amplitude as a function of the centering offset and the applied voltage.

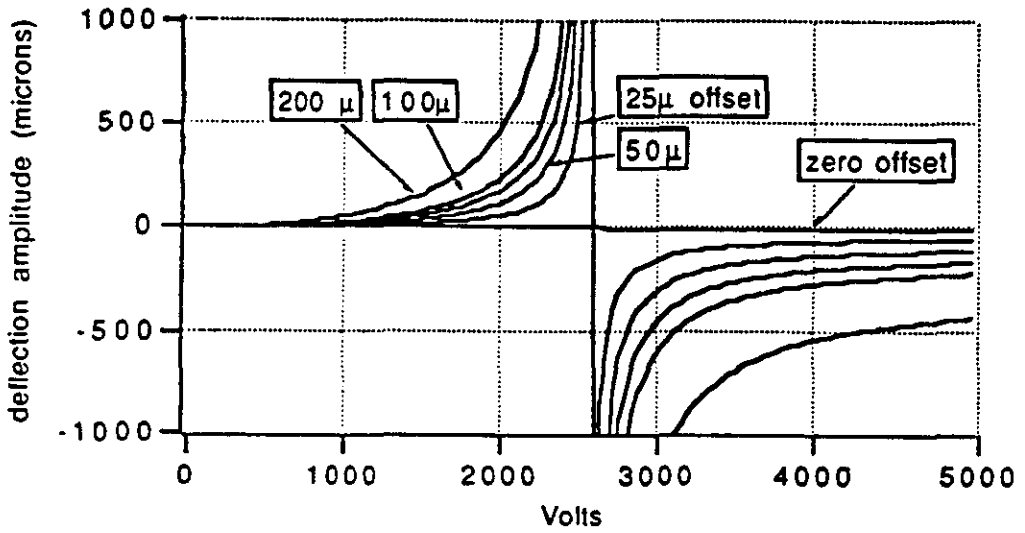

Fig. 10. The wire deflection amplitude versus voltage for several offsets

Requirements for the wire support

The design criteria for the wire supports are:

- •Center the sense wire within 25 microns
- •Allow free gas flow, restrict no more than 50%
- •Insulate the HV at 2 to 2.5 KV
- •Minimize multiple scattering
- •Minimize detector dead space
- •Allow rapid, low cost, and automated construction
- •Have long term dimension stability, radiation resistant
- •Allow accurate positioning along the wire

Several designs are shown in the next figures. Fig. 11 shows the "M&M" design which has been manufactured by Sabin Co., Bloomington, In. The unique feature of this design is that the wire is melted into position with small precision fixture shown in the same figure. A short pulse of current into a 1 inch section of the wire heats it sufficiently to melt the Delrin and allow the tensioned wire to move to the center. This support has been used in a 3.5 meter straw cell. Two other support designs are shown in Fig. 12 and 13. The " double V" design is being presently

manufactured for use in the prototype modules we are building this summer. It has the advantage over the "M&M" of allowing restringing.

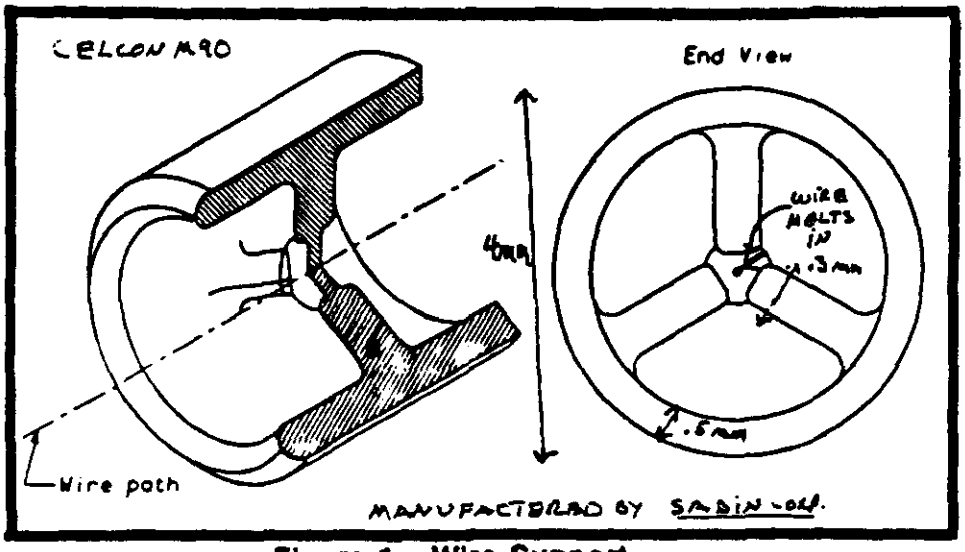

Figure 1 Wire Support

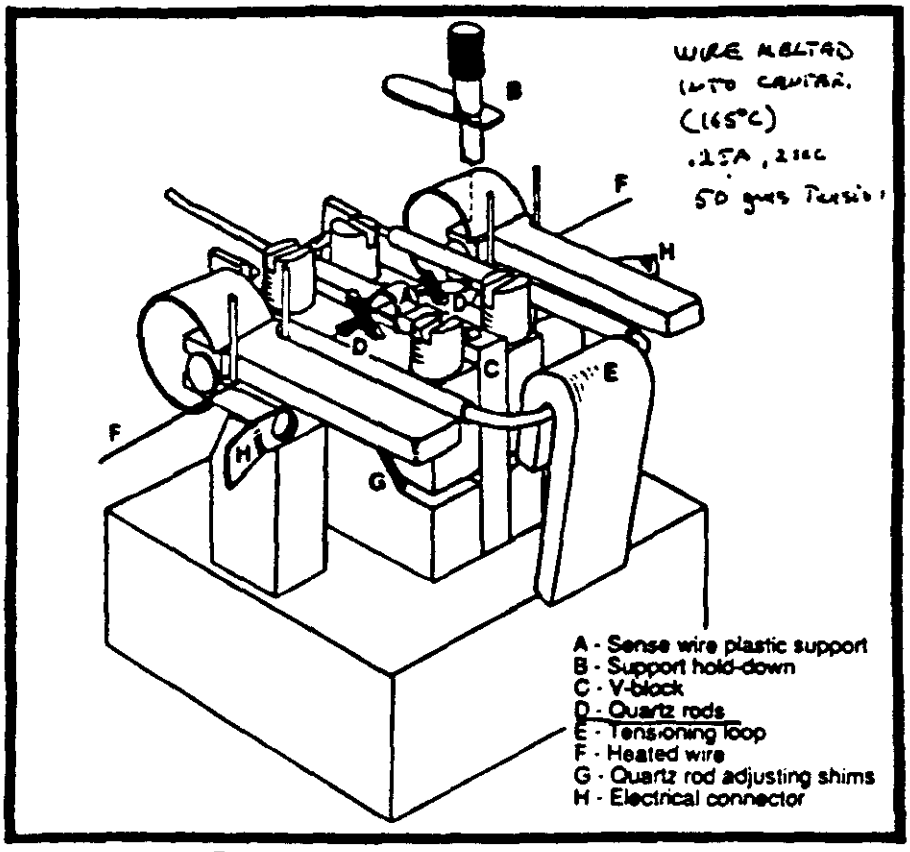

Fig. 11. Two views of an "M&M" wire spacer and the alignment jig for melting wire in.

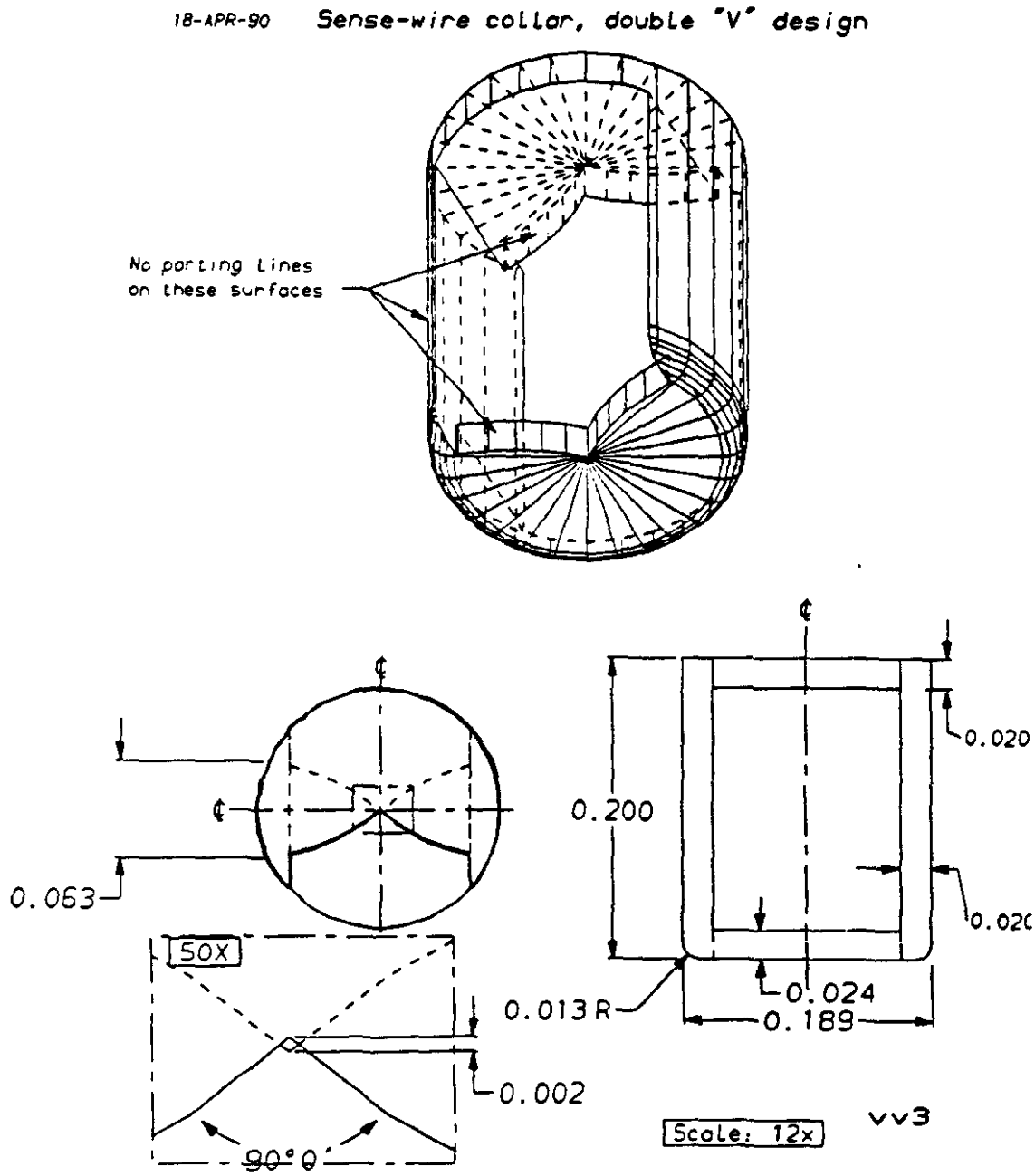

Fig. 12. A possible wire support of the "double V" variety

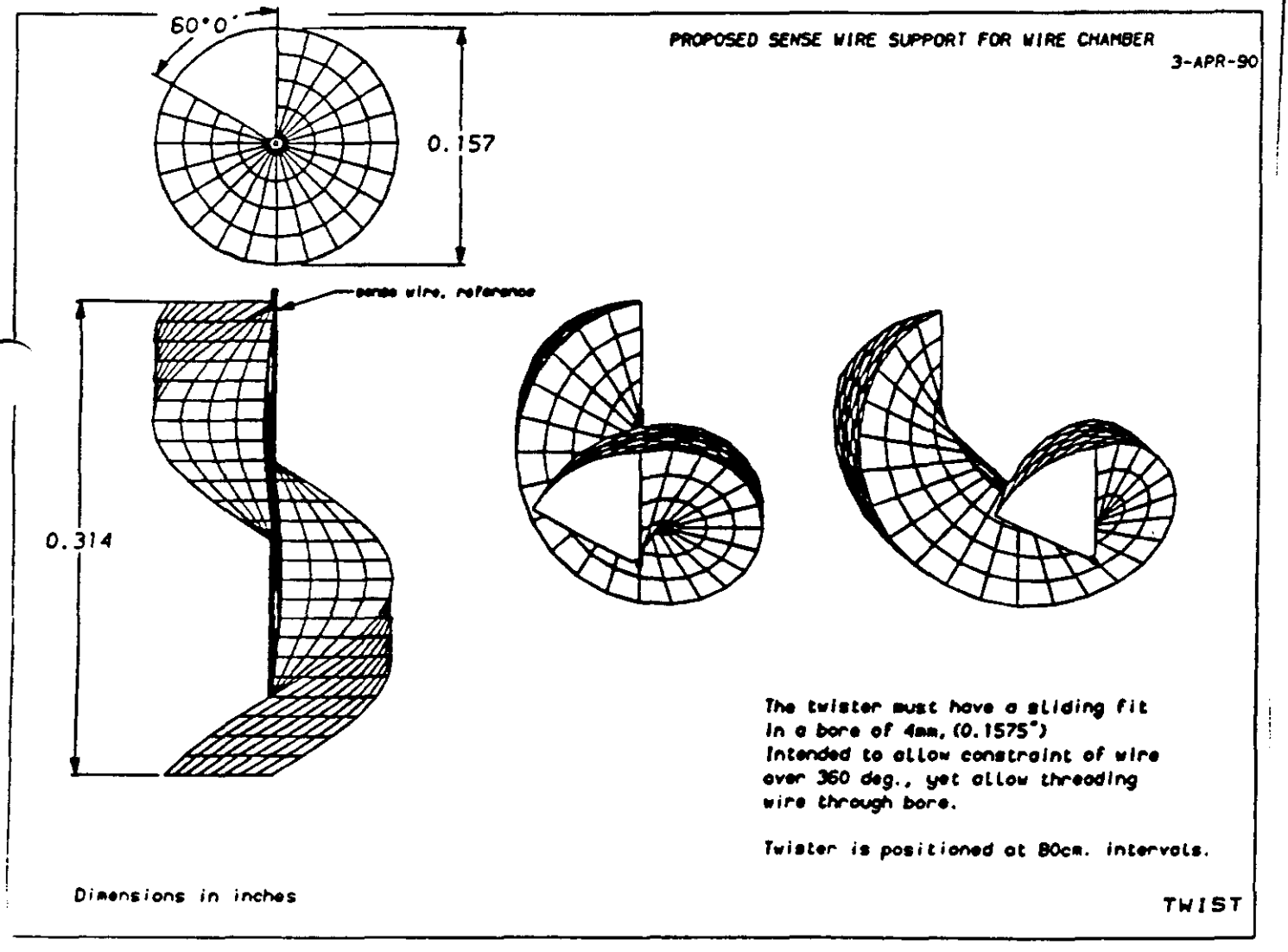

Fig. 13. A possible wire support of the "twister" variety

Drift Chamber tests

A number of studies have been done on drift chamber gases. These have been reported[4] previously , so I will mention only a few of the results to show that we have an example of a gas that will work at the SSC. The speeds of various gasses are shown in Fig. 14 a,b,c,d. The fastest gas we have studied is CF_4. with 20% isobutane, shown in 14 d. The drift time with no magnetic field is 19 ns for 2 mm drift.

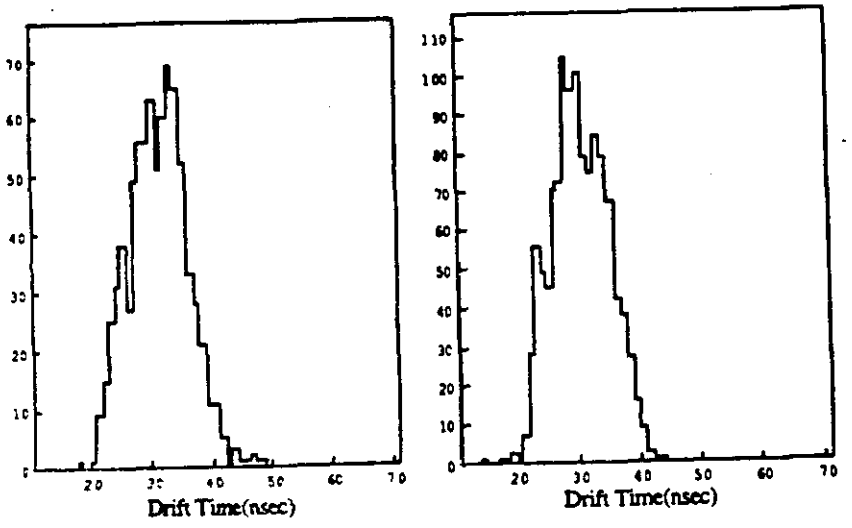

a b

Fig. 14 . a) TDC distribution for Ar-Ethane(50%) b) TDC distribution for HRS gas

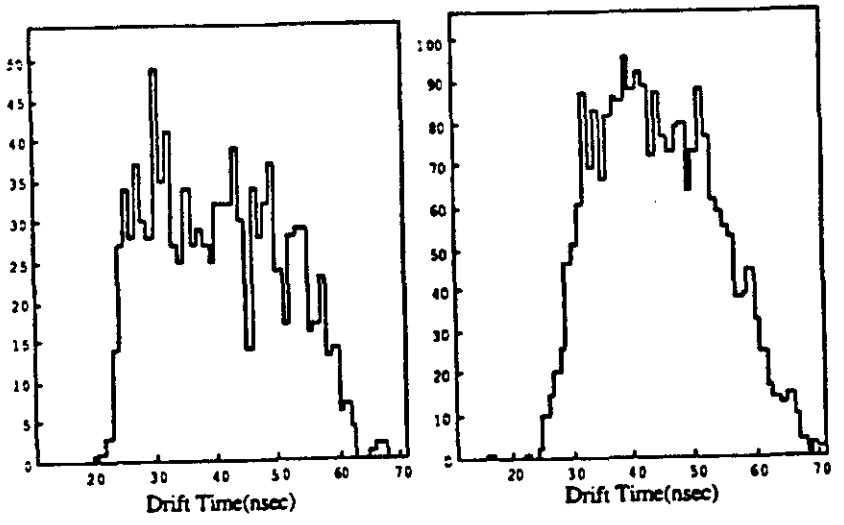

c d

Fig.14. c) TDC distribution for CF_4 d) TDC distribution for CF_4 -Isobutane(20%)

The resolution of this gas, for various isobutane concentrations is shown in Fig. 15
This gas gives us a resolution of about 100 microns and full efficiency at about 2000 Volts. Other gases are still under study.

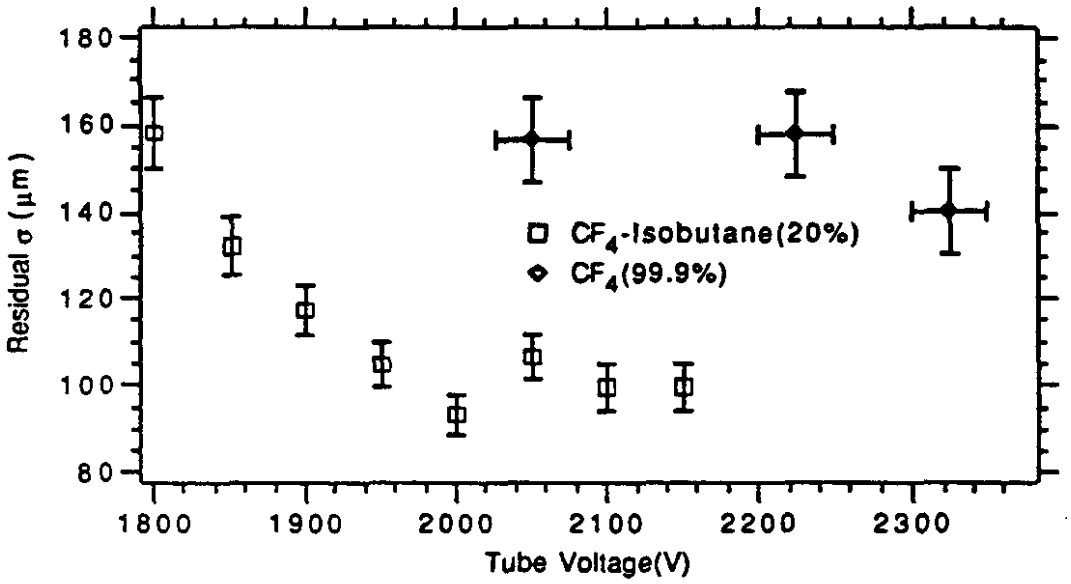

Fig. 15. Wire resolution for CF4 gas mixtures

We have also measure the efficiency of these gas mixtures as a function of voltage. These measurements, shown in Fig. 16, will depend rather importantly on the noise immunity of the electronics and the resulting threshold level, so they should only be taken as an indication of the signal size for this particular gas.

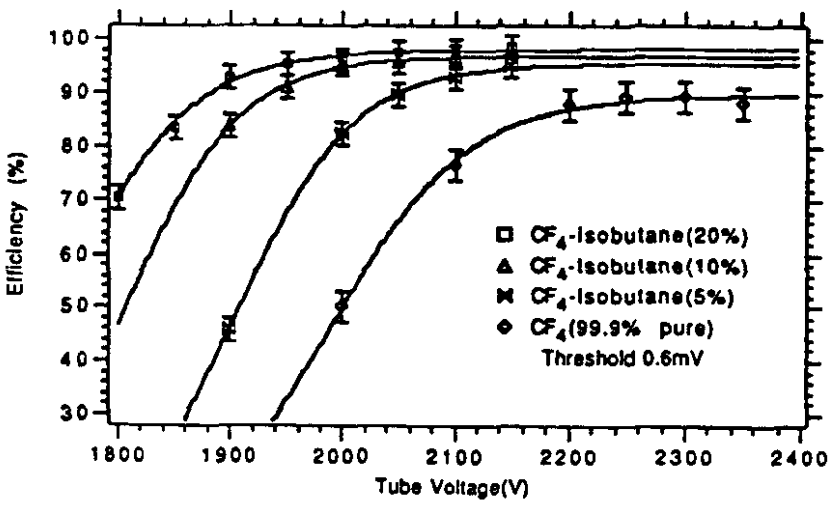

Fig. 16. Cosmic ray efficiencies for CF_4 mixtures

Long straw tests at Indiana University

In addition to the basic chamber operation studies that I reported above, we have begun a program for directly measuring the properties of long straw systems- chambers as long as those required for SSC. The goals of this program are:

- •Establish construction techniques
- •study signal attenuation
- •Study termination
- •Verify short straw performance
- •verify support-stability calculations

As part of this program we have constructed a 2 meter, six straw array and completed a 3.5 meter, six straw array. The six straws are held in a precision machined V groove 3.6 meters in length. The basic test system for cosmic rays in shown in Fig. 17.

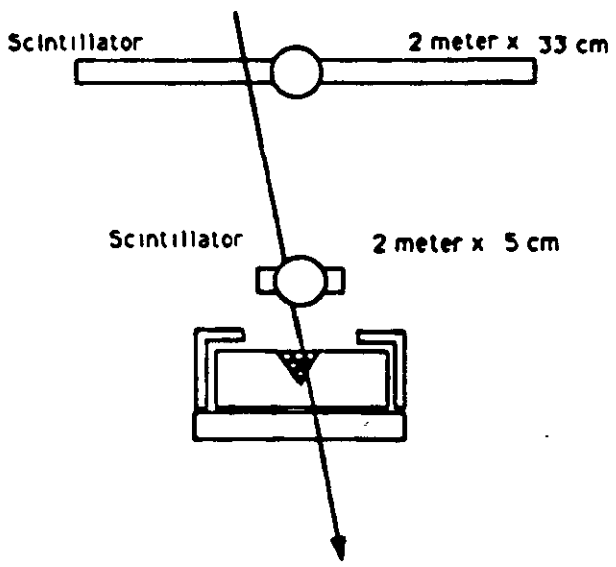

Fig. 17. Layout for 6 straw chamber cosmic ray tests

In the case of the 3.5 meter straw array, two straws were spliced together to give the full length. Wire spacers of the "M&M" design were positioned every 60 cm. Our initial tests satisfy us that the system is electostatically stable and that the performance is very similar to the short straw system. In Fig. 18 we show the measure pulse height from a Fe^{55} source for a 3.5 meter straw tube operating at 2300 V. Both the direct and the reflected pulse can be seen. The pulse is extremely short.

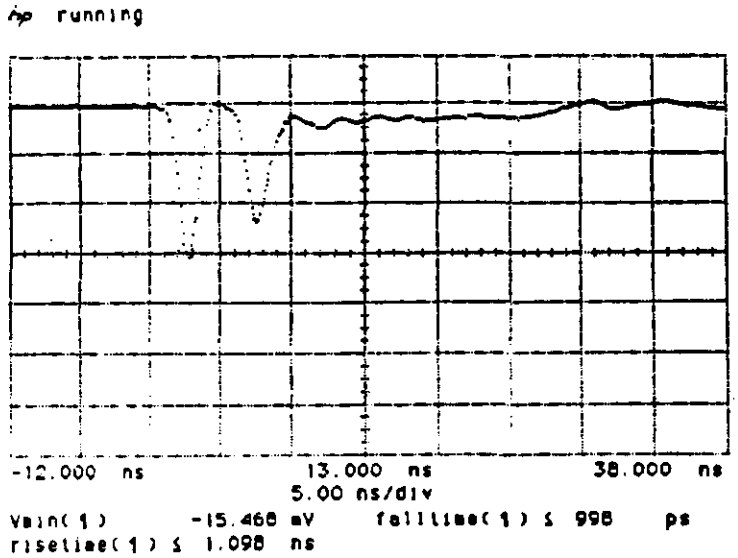

Fig.18. Direct signal from Fe^{55} source with reflection pulse

The far end of the straw was satisfactorily terminated with 223 ohms through 34 Pf. This is consistent with the calculated value of 310 ohms for the impedance of the straw transmission line. The terminated pulse is shown in Fig. 19.

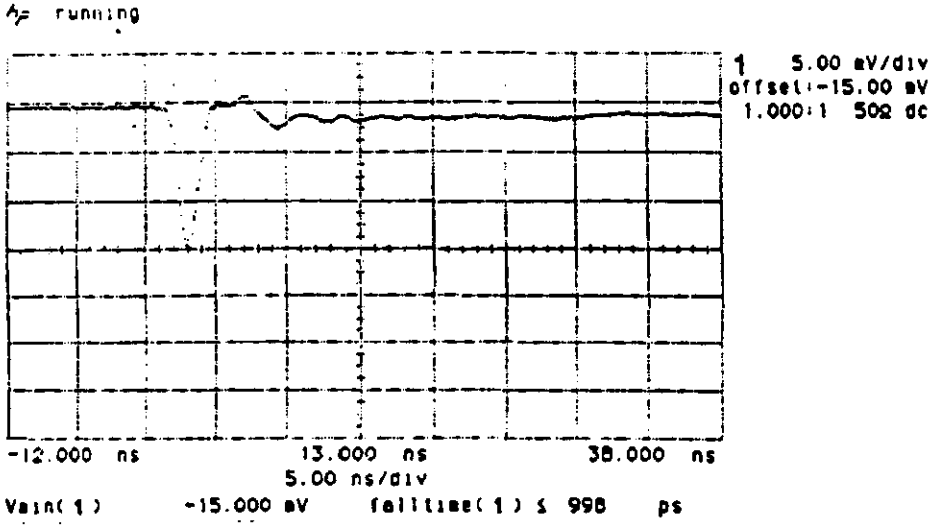

Fig. 19. Signal after termination at far end.

Using the terminated pulse we were able to measure the attenuation of the Fe^{55} signal in the straw chamber. This is shown in Fig. 20. We find an attenuation length of somewhat over 4 meters. This would be satisfactory for the 3 meter length chambers foreseen at SSC, but is somewhat shorter than a simple calculation would predict. We are investigating the effects of the splice resistance and the total cathode resistance.

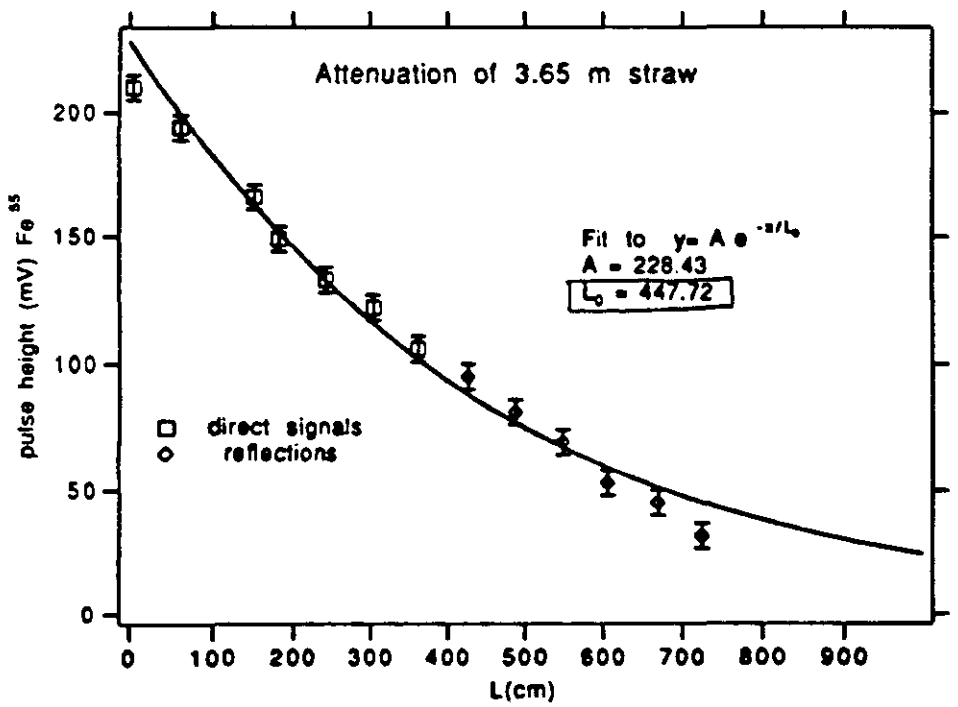

Fig. 20. A measure of the signal attenuation in a 3.5 meter straw

We were also able to make a series of measurements on the 2 meter six straw system using the University of Pennsylvania electronics. The signal from a cosmic ray in the 2 meter straw. is shown in Fig. 21. The signal shown is the output of the University of Pennsylvania preamplifier with tail cancelation circuitry . Note the very short recovery time of the signal to the base line.

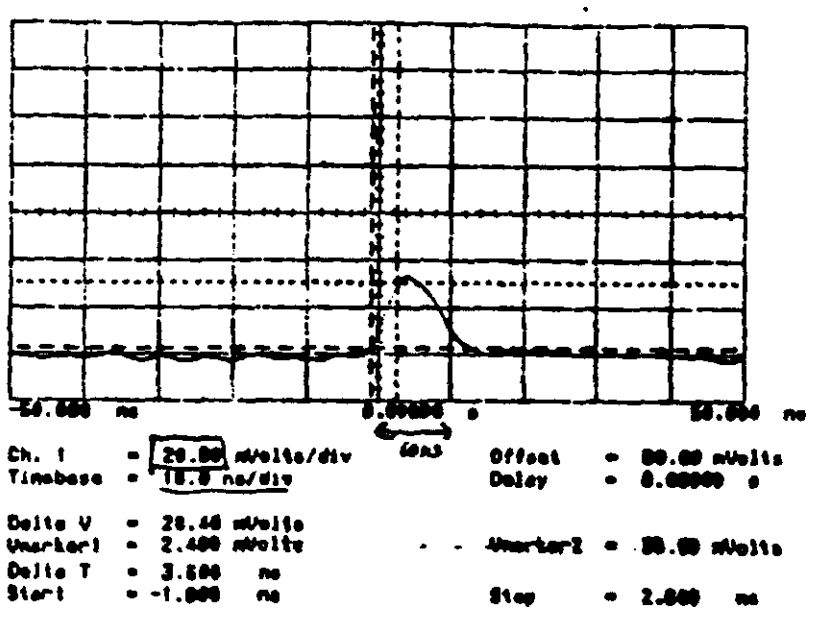

Fig. 21. A "typical" cosmic ray signal after amplification and tail cancelation

Signal Calculations

We have calculated the signal characteristics of the 4 mm straws based on the work done by Iwasaki.[5] We note that there is an impressive gain in signal size going to a fast gas at higher voltage. Figure 22 shows the calculated signal from a 3 meter straw for both 7 mm and 4 mm diameters. The 4 mm straw gives almost twice the signal, and has a much faster rise time. We feel that both jitter and walk errors will be tolerable in 4 mm straws. of 3 meter length.

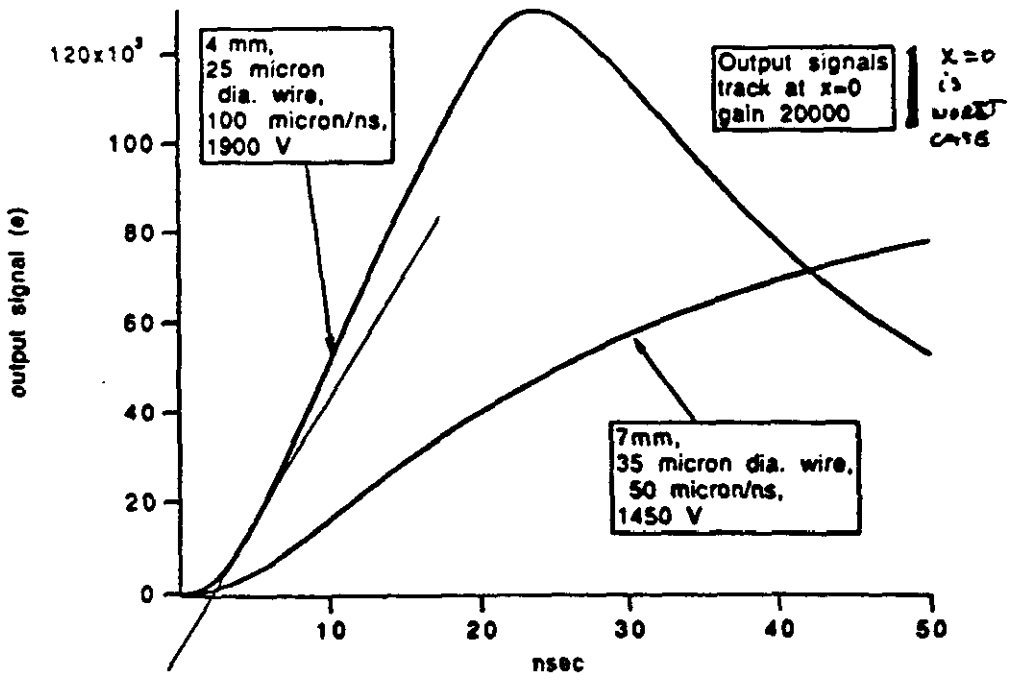

Fig.22. A calculation of the signal size from two different gases and straw diameters

Summary

Large scale mechanical design of a modular straw system is underway by Westinghouse. This design will include the integration with Si system , the module support , and a study of the alignment and stability of the system.

The modular approach to constructing a tracking system will be studied this summer with the construction of several 64 straw modules. These will be available for testing by collaboration. Tests might include :

- electronics evaluation
- High rate beam studies
- Trigger electronics
- Gas flow and heating studies
- Radiation testing
- precision track linking and resolution

We would like to stress that basic R&D still very useful by any group. We would like to help you get started if you are interested. Some areas of useful activity might be:

- Straw tube materials
- wire studies
- spacer designs
- fast gases- response in B fields
- endplate design- signal coupling
- termination- capacitors

References

1. Central and Forward Tracking with wire chambers, SSC Detector subsystem,
   Indiana University
   D. Blockus, R. Crittenden, A. Dzierba, R. Foster,G. Hanson, C. Neyman, H. Ogren, D. Rust
   University of Colorado
   G. Baranko, H. Cheung, J. Carr, J. Cumalat, E. Erdos, W.T. Ford, J. Ginkel, U. Nauenberg, P. Rankin, G. Schultz, J. G. Smith
   University of Pennsylvania
   F. Newcomer, R. Van Berg, H.H. Williams
   KEK National Laboratory
   Y. Arai
   Lawrence Berkeley Laboratory
   A. Palounek
   University of Michigan
   J. Chapman
   University of California, Davis
   R. Breedon, W. Ko, R. Lander, K. Maeshima, J. Smith
   Rutherford Appleton Laboratory
   J.C. Hart, N. McCubbin, D. Saxon, P. Sharp
   University of Liverpool
   P. Booth, J. Dainton, E. Gabathuler
   Westinghouse Science and Technology Center
   D.Hackworth, J. Hendrickson, J. Barkel, R. Svendrud
   Oak Ridge National Laboratory
   T. Shannon

2) The 4 mm straws we used were made by Precision Paper Tubes, Wheeling Ill.

3) Wire Stability tests on 4 mm straw chambers, H. Ogren, et. al., IUHEE 90-2

4) Gas Studies on 4 mm diameter straw drift chambers, C. Neyman, IUHEE 90-1

5) A study of Time resolution for a Straw Chamber, H. Iwasaki KEK 89-158