Fermilab Library
0 1160 0052470 6

SDC-90-00056

SDC
SOLENOIDAL DETECTOR NOTES

A WIRE SUPPORT DESIGN FOR STRAW DRIFT CHAMBERS

R. Foster, G. Hanson, B. Martin, C. Neyman, H. Ogren, D. Rust

February 9, 1990

February 9, 1990
IUHEE 90-3

A wire support design for Straw Drift Chambers

R. Foster, G. Hanson,B. Martin C. Neyman, H. Ogren, D. Rust

SSC R&D Group

Indiana University

1) Introduction

Straw drift chambers have been built and used in experiments for the past eight years. Straw lengths up to 80 cm and straw diameters as small as 4 mm have been used With the smallest diameter straws, and with voltages of more than 2000V , electrostatic stability becomes a problem. The design of 2 and 3 meter straws for SSC will necessitate the use of internal spacers to support the wire. This report is a description of a device for supporting the sense wire precisely in a straw tube. Our design seems close to meeting the following design goals:

- Center the sense wire within 25 μ
- Allow free gas flow through straw
- Insulate without noise at the 2 KV working voltage.
- Minimize multiple scatter and photon conversion.
- Minimize detector dead space.
- Allow low cost , rapid, and, automated assembly.
- Have long term dimensional stability
- Allow accurate positioning along the sense wire.

2.) *Description of the support spacer*

The support, shown in figure 1, is injection molded from acetal plastic,(Celanese Celcon M90). The overall form is a cylinder 3.95 mm diameter and 4 mm long. The central portion which grips the wire is molded as a blank disk 0.3 mm thick and about 0.5 mm diameter. The disk is connected to the wall by three spokes. The wall, which is 0.5 mm thick, is the only high precision part of this support; it must precisely conform to the straw's inner wall allowing a sliding fit within the straw. One end of the cylinder is rounded to allow easy entry into a straw. The mold parting line is placed at the edge on the opposite end. The molding injection hole, located on the outer wall, has been slightly recessed to clear the edge of the cylinder.

3) Wire attachment

The sense wire is melted into the spacer center by electrically heating the wire while both the wire and the spacer are positioned in a fixture. The Celcon M90, a crystalline plastic, melts at 165C, so that the demands on the wire and the fixture are minimal. The fixture for accurately molding the wire in position is shown in figure 2. The plastic support is positioned by clamping it in a V-block . The wire is aligned on each side of the plastic spacer by pairs of quartz rods that are prealigned to be on the centerline of the spacer. The wire is clamped on either side and a simple weight arrangement maintains

the constant tension, (about 50 gm), needed to drive the wire through the melted plastic to the centerline. The wire is heated electrically by current fed through the clamps. A 0.25A current applied for less than 2 sec. is needed to center a 25 μ diameter gold plated tungsten wire. When the wire reaches the center, radial forces vanish and the wire remains centeredwhen the plastic cools (within a second or so).

3.) Tests and applications

Some tests have been made to see how closely this technique reaches our design goals. The molded-in wires have been measured to center within 40 μ. We believe that further improvements such as more careful adjustment of the quartz rods.in the melting fixture will allow this to be better than 25 μ. The centering of the wire in the straw would then be limited by the necessary gap between support and straw tube needed to slide the support into position.

We are in the process of assembling a long straw chamber using these supports. We have tested these supports in a short prototype straw chamber and have not observed any problems with noise or breakdown when operated at the highest normal operating voltage of 2.3KV.

Because of the small size of the attachment point at the center of the support the wires break free from the plastic at about 30 gm. of axial force and then slide freely through the plastic. All supports needed for a straw may be attached with the required separation prior to pulling the wire into the straw. The attachment seems secure enough for the supports to retain their proper separation after the wire is pulled through the straw, yet can be dislodged without damage to wire or spacer if adjustments are needed.

We plan to continue evaluation of these supports. Some of the questions we will try to answer are:

What is the impedance to gas flow?
Are there signal attenuation effects?
How effective are the supports for use in splicing straws?
Is there long-term creep when the supports are subjected to radial forces likely to occur at straw ends?
Can these supports be helpful in centering the wire at the ends of straws and thus be integrated into the end cap design?
Are the supports damaged by the radiation dose in an SSC experiment.

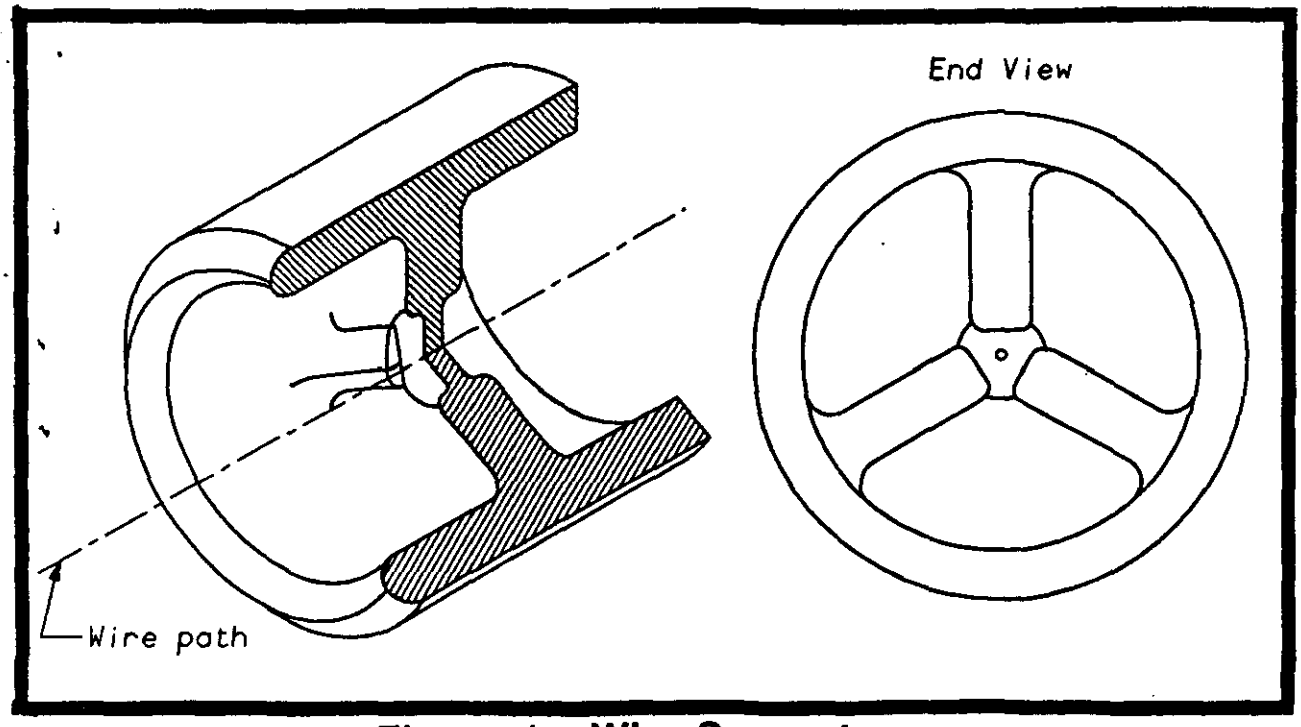

Figure 1 Wire Support

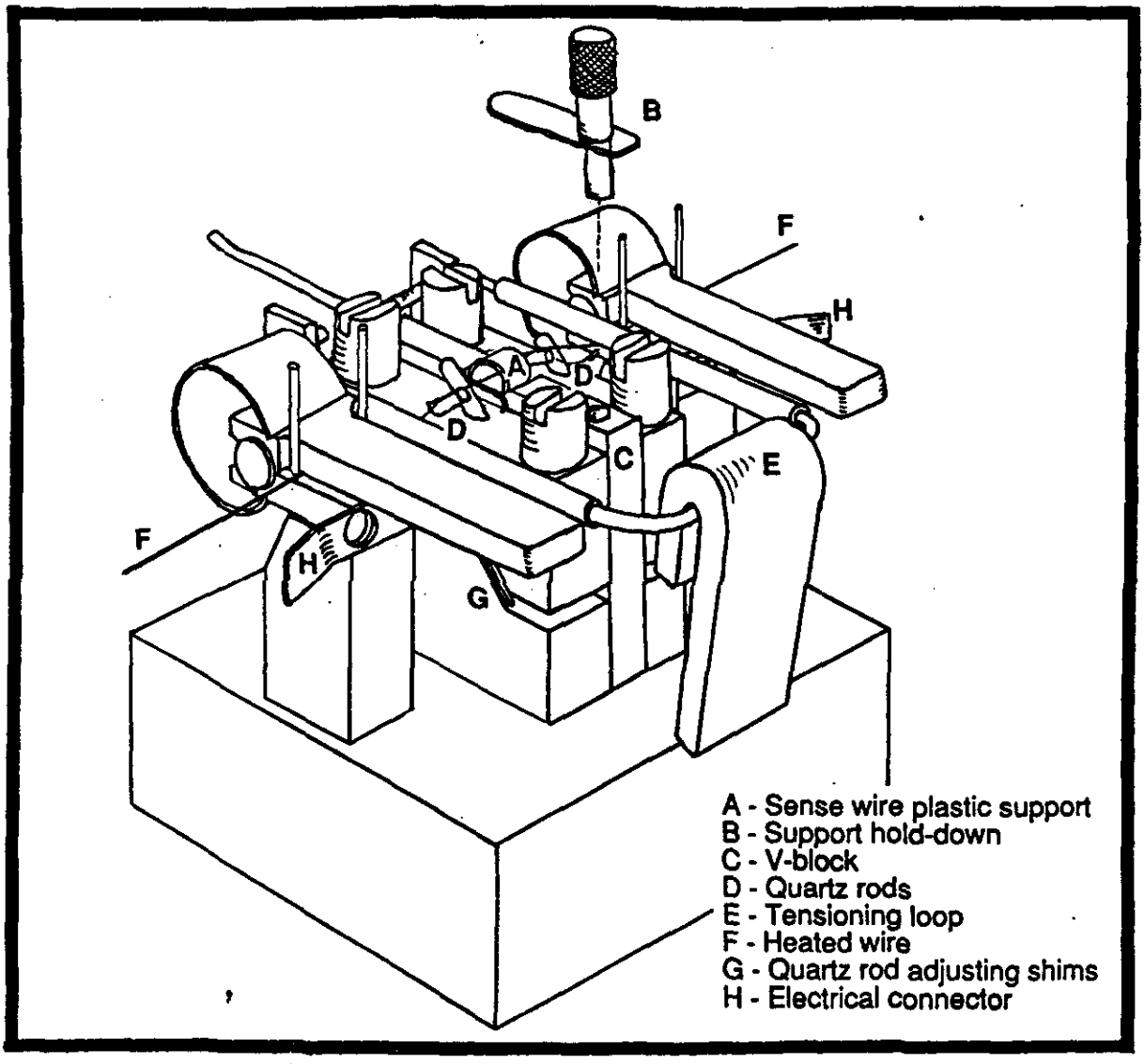

Figure 2 Centering Fixture