Fermilab Library
0 1160 0052450 8

SSC-SDC-34

SSC-SDC
SOLENOIDAL DETECTOR NOTES

COMPUTATION OF COIL PARAMETERS FOR
RTK BASELINE MUON TOROID

J. Bensinger

March 28, 1990

Computation of Coil Parameters for RTK Baseline Muon Toroid

Jim Bensinger
3/28/90

In order improve our understanding the of the interaction between the construction of the detector hall and that of SDC we have designed a paradigm solenoid detector which we can use as a basis for understanding construction schedules, facilities needs, construction manpower requirements, and hall construction details. The detector used in this study is shown in figures 1 and 2. The barrel muon toroids shown in these figures are 60 cm thick and are in two concentric layers with 20 cm between them for muon chambers. The forward toroids are built as four 85 cm thick "wafers" at each end of the barrel solenoid. The purpose of this note is to discuss the design of the coils that are needed to energize the toroidal magnetic field. The coils discussed here cannot in any way be considered optimized, the only goal is to establish the parameters for one possible coil design for the RTK baseline detector.

The muon steel is presumed to have good magnetic qualities, an example of the magnetization of such steel is shown in figure 3. For this steel some typical values of the relative magnetic permeability are given in the following table.

B (Tesla)	H (AT/m)	$\frac{\mu}{\mu_0}$
1.6	1000	1275
1.8	4000	360
2.0	10,000	160

Barrel Toroid:

First we calculate the number of amp turns needed for the barrel toroid. The relevant parameters for this calculation are shown in figure 4. The relevant numbers for the barrel toroid are:

Barrel	W_0 meters	W_i meters	L meters	t meters	Mass tons
Outer	14.6	13.4	25.0	.60	7,196
Inner	13.0	11.8	25.0	.60	6,374

For a magnetic field B the magnetic flux in the toroid is $\Phi = B \cdot A = B \cdot L \cdot t$ and the magnetic reluctance is given by:

$$R = \frac{2 \cdot (W_o + W_i)}{\mu \cdot A}$$

and the magnetic permeability is given by $\mu = \mu_{rel} \cdot \mu_0 = \mu_{rel} \cdot 4 \cdot \pi \cdot 10^{-7}$. From Ampere's law we calculate a driving current given by $R \cdot \Phi = N \cdot I$ where N is the number of turns and I is the current in amps. Since the losses are all resistive the power is given by $W = I^2 \cdot R$. If we assume a copper conductor 1" x 1.5" with a .5" diameter hole (see figure 5) through the center for cooling water, we can calculate the power consumed. For the conductivity of copper we use $5.8 \cdot 10^7$ m/ohm. The results are summarized in the following table. The voltage shown assumes that the coils are connected in series.

Barrel Toroid	Amp Turns Amps	Turns	Current Amps	Power Watts	Coil Voltage Volts	Copper Tons
Outer	224,000	112	2000	470,209	235	39.0
Inner	198,400	96	2067	430,354	208	33.5

The coils in this design are broken up into 8 coil packs on both the inner and outer barrel toroids. In each corner there is one pack on either side of the corner as shown in figure 6. There are 14 turns in each coil pack on the outer barrel and 12 turn in each pack on the inner barrel. The cooling water system is designed to flow into one turn of the coil pack and out its neighbor. Thus each pack on the outer (inner) barrel will have 7 (6) water input connections and 7 (6) output water connections. We assume a rise of water temperature of 5° C. (This number is a guess, some engineering needs to be done to determine the largest temperature variation that can be tolerated.)

We can now calculate the water flow per turn-pair needed to carry off the heat produced. (Recall that 1 calorie raises 1 cm^3 of water 1° C and 1 calorie = 4.184 Joules.) For the outer turn-pairs this is 24.1 liters/minute or 1,349 liters/minute total. For the inner turn-pairs this is 25.7 liters/minute or 1,234 liter/minute total.

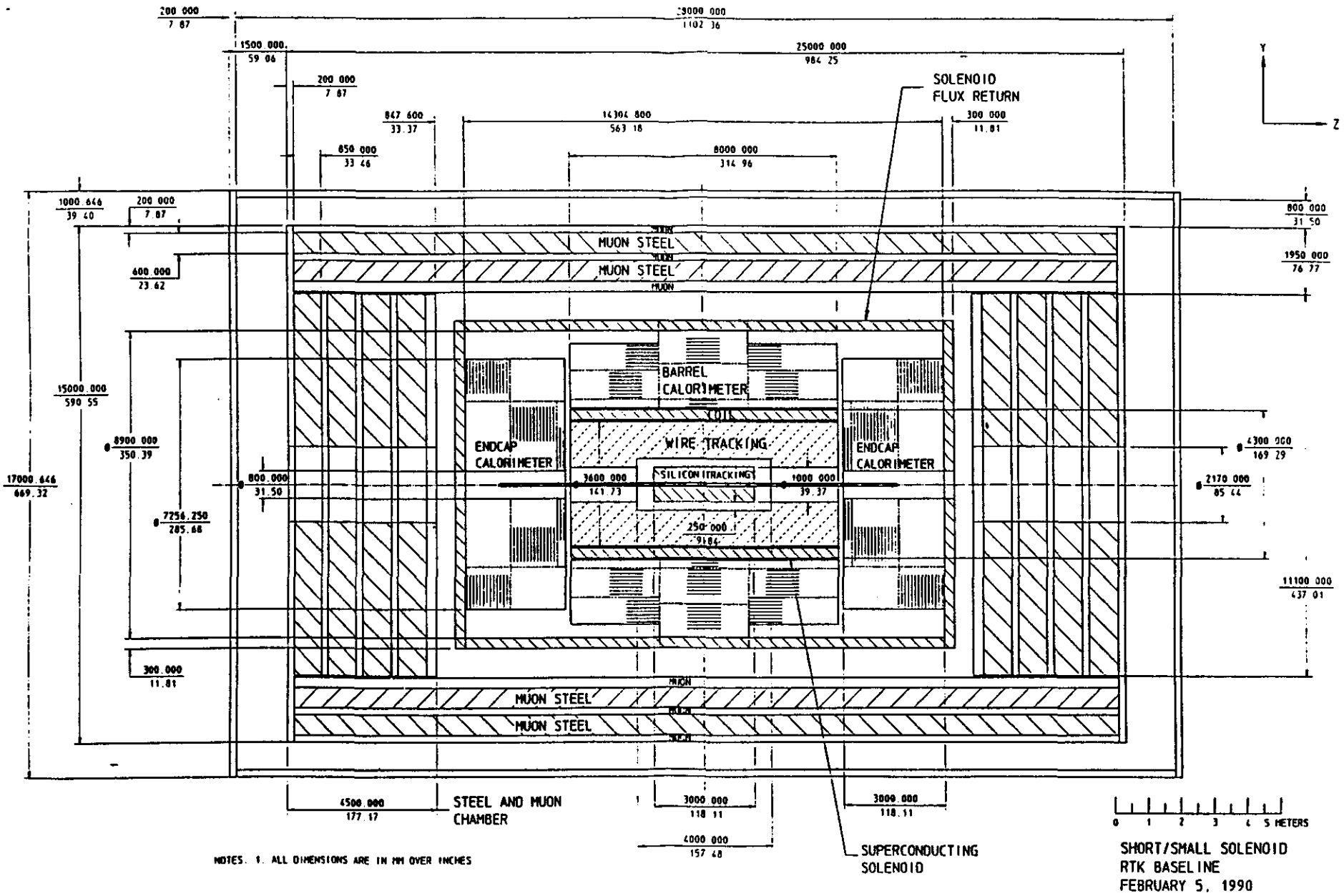
SOLENOID
FLUX RETURN
MUON STEEL
MUON STEEL
BARREL
CALORIMETER
COIL
WIRE TRACKING
SILICON TRACKING
ENDCAP
CALORIMETER
ENDCAP
CALORIMETER
MUON STEEL
MUON STEEL
STEEL AND MUON
CHAMBER
SUPERCONDUCTING
SOLENOID
SHORT/SMALL SOLENOID
RTK BASELINE
FEBRUARY 5, 1990
NOTES. 1. ALL DIMENSIONS ARE IN MM OVER INCHES

Figure 1

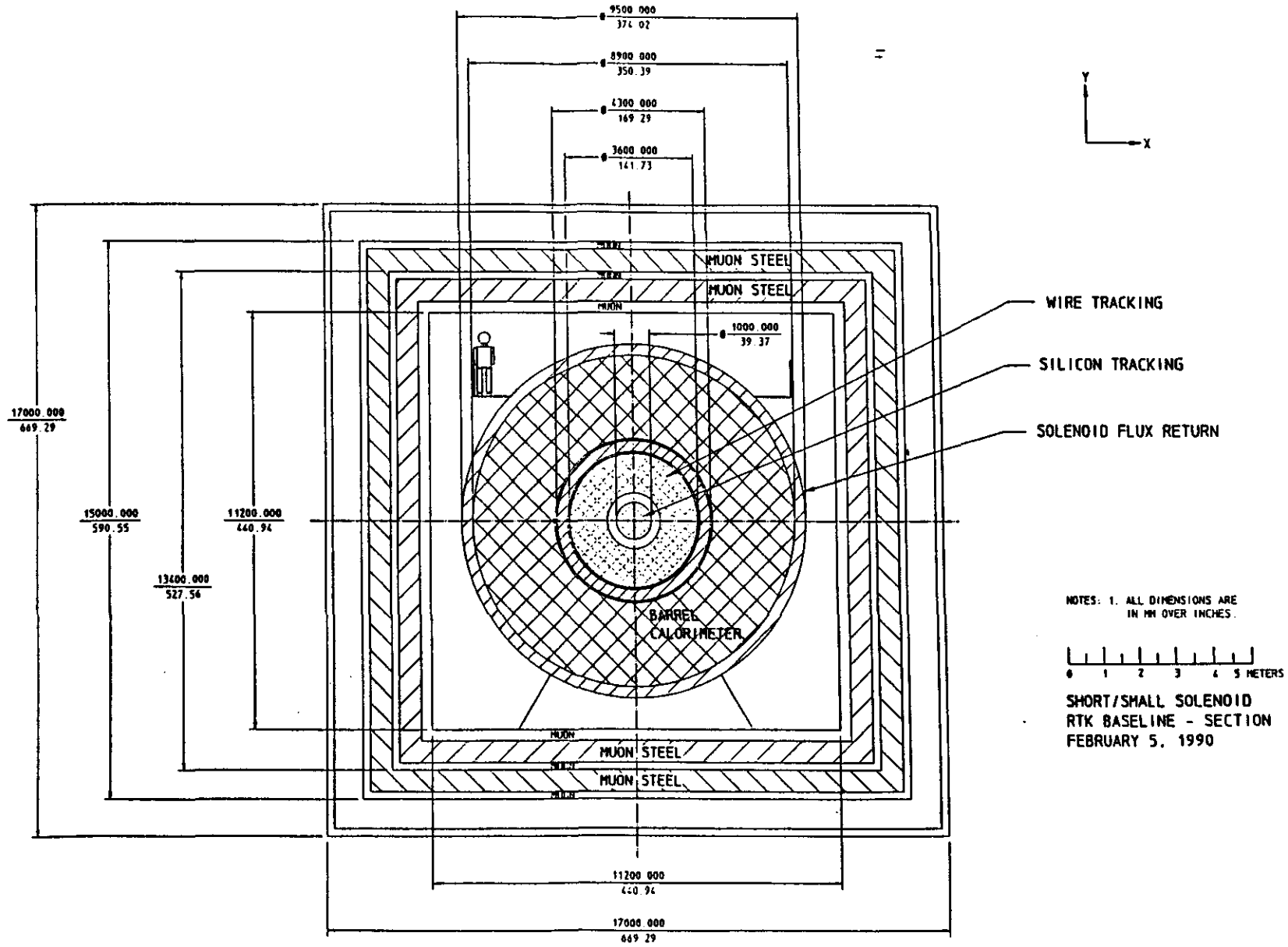

9500.000
374.02
8900.000
350.39
4300.000
169.29
3600.000
141.73
1000.000
39.37
17000.000
669.29
15000.000
590.55
13400.000
527.56
11200.000
440.94
MUON STEEL
MUON STEEL
MUON
MUON STEEL
MUON STEEL
BARREL CALORIMETER
WIRE TRACKING
SILICON TRACKING
SOLENOID FLUX RETURN
Y
X
NOTES: 1. ALL DIMENSIONS ARE IN MM OVER INCHES.
0 1 2 3 4 5 METERS
SHORT/SMALL SOLENOID
RTK BASELINE - SECTION
FEBRUARY 5, 1990

F 2

Finally we calculate the water pressure of the system. From the volume of water flowing through a .5" diameter pipe we find the the velocity of the flow in the outer (inner) coil to be 3.17 (3.38) m/s. Since this is turbulent flow, Renolds number ~55,000, we have to read the friction factor from a Moody diagram. In the smooth pipe limit for this Renolds number we get f = .02. The pressure difference is given by:

$$\Delta P = f \cdot \frac{\text{Length}}{\text{Diameter}} \cdot \frac{\text{Velocity}^2}{2} \cdot \text{Density} \cdot 1.45 \times 10^{-4}$$

where the units are all MKS and the final factor is the conversion from Newtons/meter^2 to PSI. This gives a pressure loss of 116 (133) PSI across each turn-pair of the outer (inner) barrel.

Forward Toroid

Similar calculation can be done for the forward toroids. In this case the forward toroids consists of 4 wafers which are split into two halves along a vertical bisector (shown as a dotted line in figure 7). The relevant parameters for the forward toroid are shown in figure 7 and there values are given in the following table.

Wafers	L meters	ℓ meters	t meters	Copper tons
1	11.1	2.17	0.85	872
4	11.1	2.17	4.00	3488

In order to insure that flux is uniform in the square steel a nonmagnetic wedge is inserted in each corner of the forward toroid as shown in figure 7. The thickness of this wedge is tapered to zero at the outer edge and is $(L-\ell)/\mu_{rel}$ at the inner edge. The effect of the taper is to make the magnetic reluctance equal at along every path parallel to the outer edge of the toroid. Thus the length of the magnetic circuit is given by 4•L. The reluctance is given by:

$$R = \frac{4 \cdot L}{\mu \cdot A}$$

As before from Ampere's law we find N • I = 177,600 Amp-Turns. If we have a total of 88 turns in the coil on one forward toroid (four wafers), we have 2018 amps flowing in the coil. The coils are in 4 packs of 22 turns each, two on each half toroid as shown in the figure 7. The Joule heating in each forward toroid is .124 Kwatts. To cool the coil for one forward toroid we have 4 water inputs (and 4 outputs) on each coil pack. That is each each water connection feeds 5.5 turns of the coil with a pressure differential of 100 PSI. If we assuming a 5°C temperature rise, this uses 360 liters of water a minute in each of the forward toroids. the coil operating parameters are summarized in the following table.

Forward Toroid	Amp Turns Amps	Turns	Current Amps	Power Watts	Coil Voltage Volts	Copper Tons
One End	177,600	88	2018	124,395	62	10.1
Both Ends				248,790		20.3

I am indebted to Joseph Rasson for checking these calculations.

Figure List

1 and 2) Full face and profile of RTK version of the SDC experiment.

3) B vs. H for high quality magnetic steel.

4) Barrel toroid schematic defining parameters for calculations.

5) Coil description, cross section and outline of barrel and forward coils

6) Coil pack layout (use RTK drawing)

7) Diagram of forward muon toroids.

8) Moody diagram for friction factor.

Ferrite grain

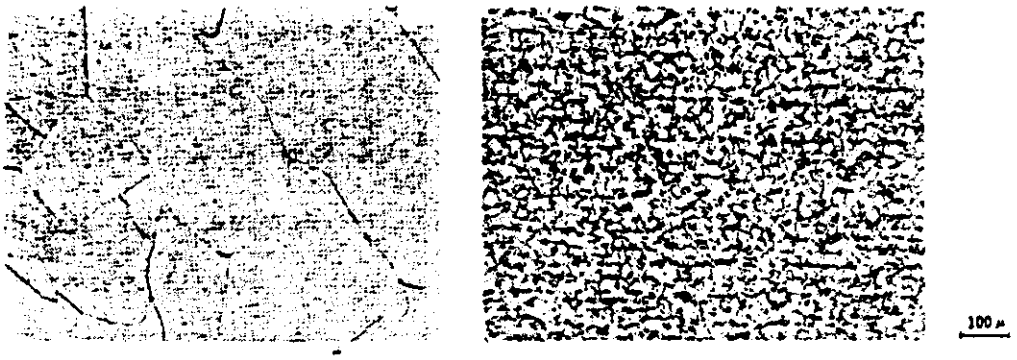

Extra-thick Electrical Steel (JIS. Gr. No.-2)

Ordinary mild steel (JIS. Gr. No. 8)

Magnetic properties

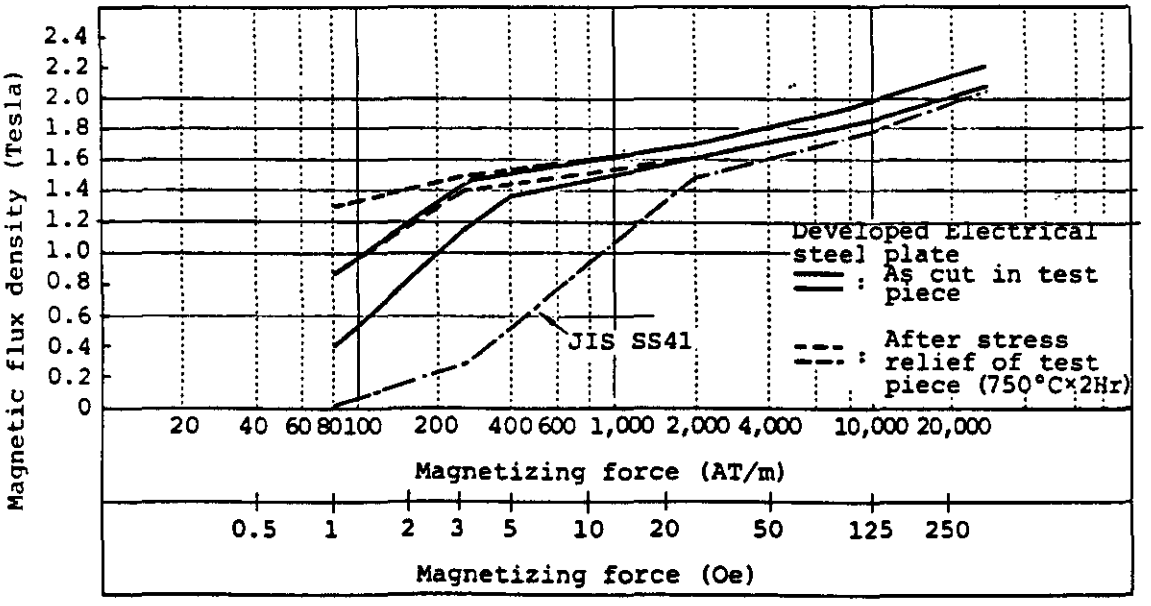

Figure 3

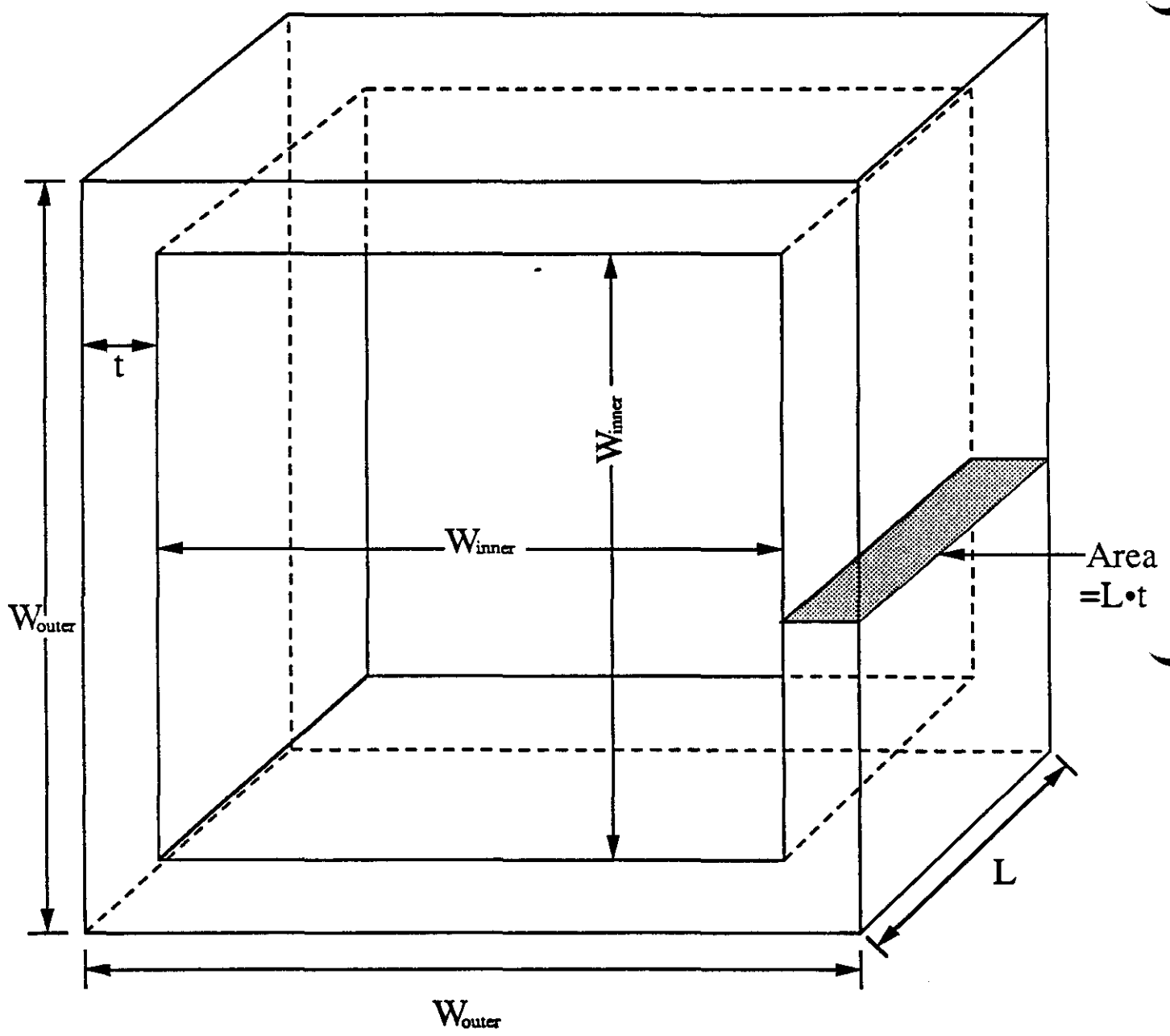

$$\text{Volume} = (W_o^2 - W_i^2) \bullet L \qquad \text{Magnetic Length} = 2 \bullet (W_o + W_i)$$

Figure 4
Iron for Barrel Toroid

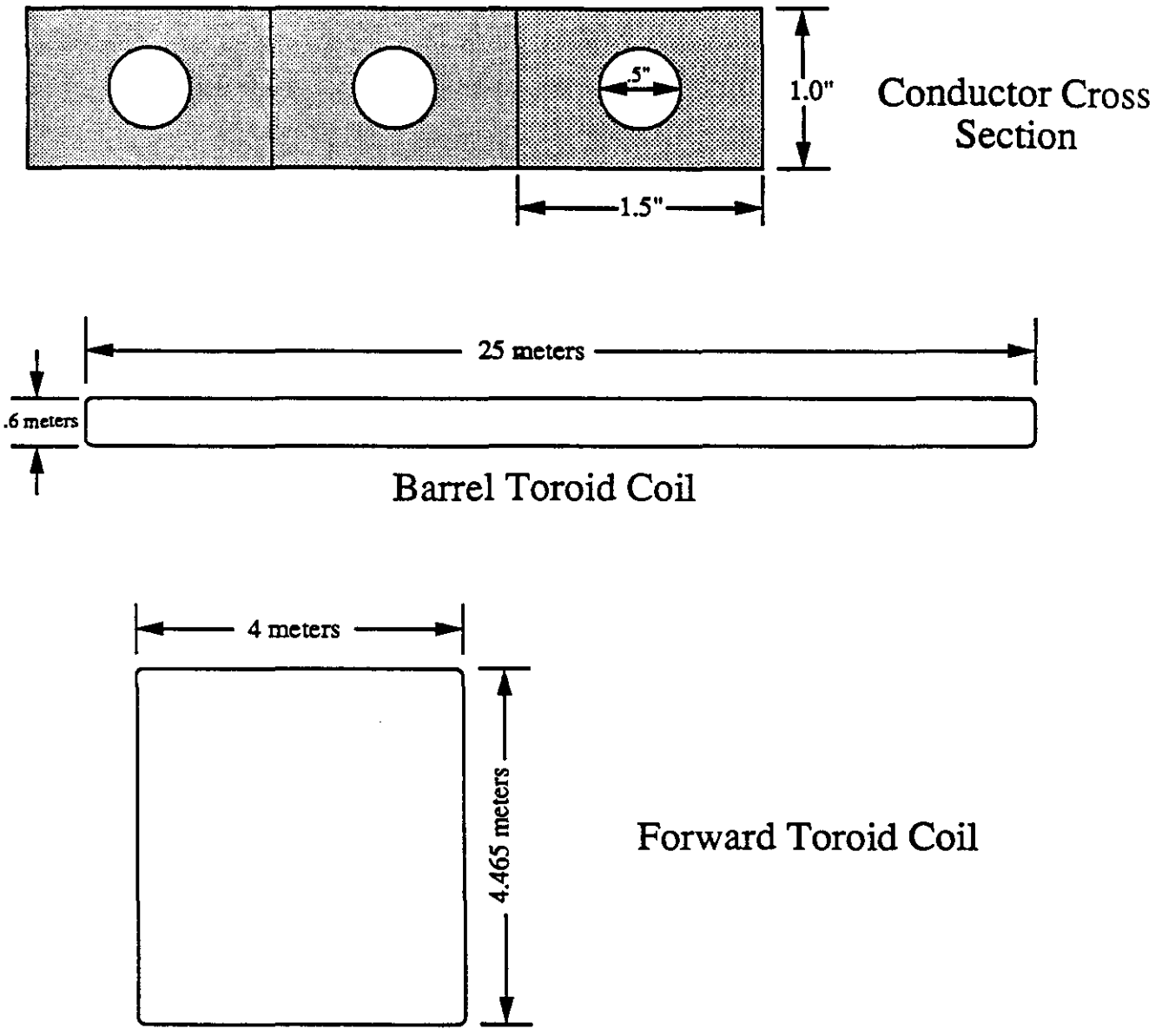

Figure 5
Coil and Conductor Dimensions

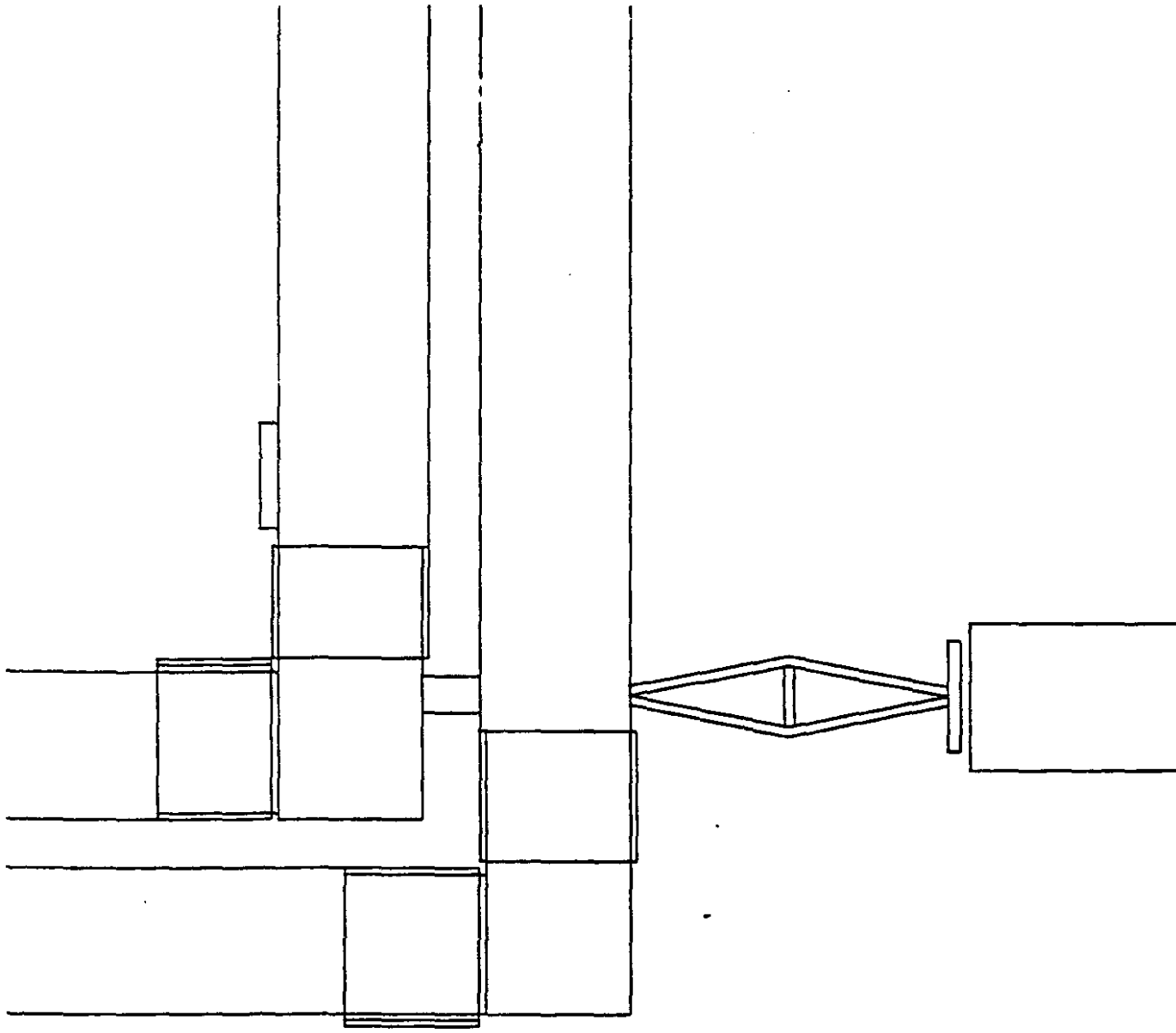

Figure 6

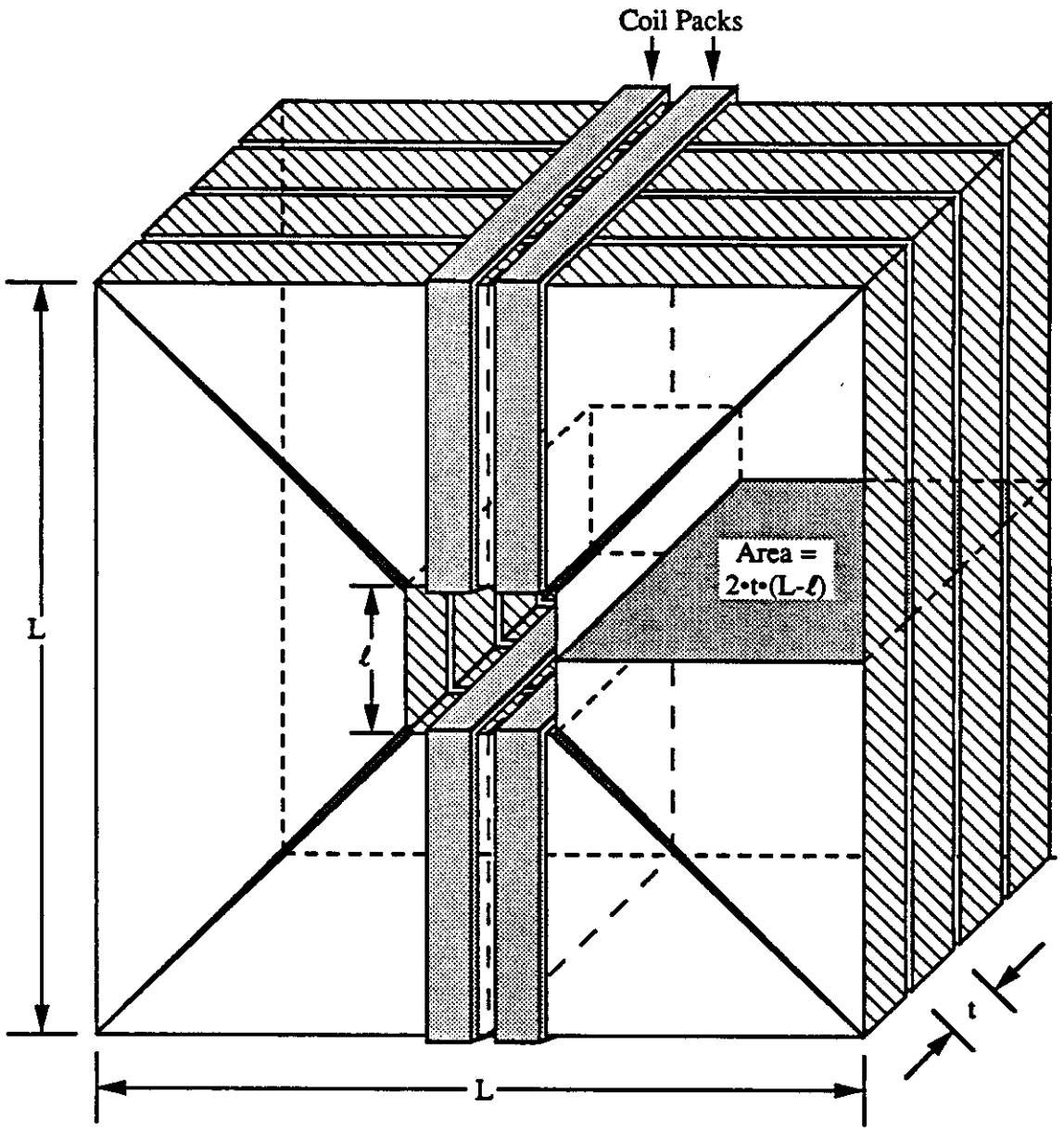

Figure 7
Forward Toroid

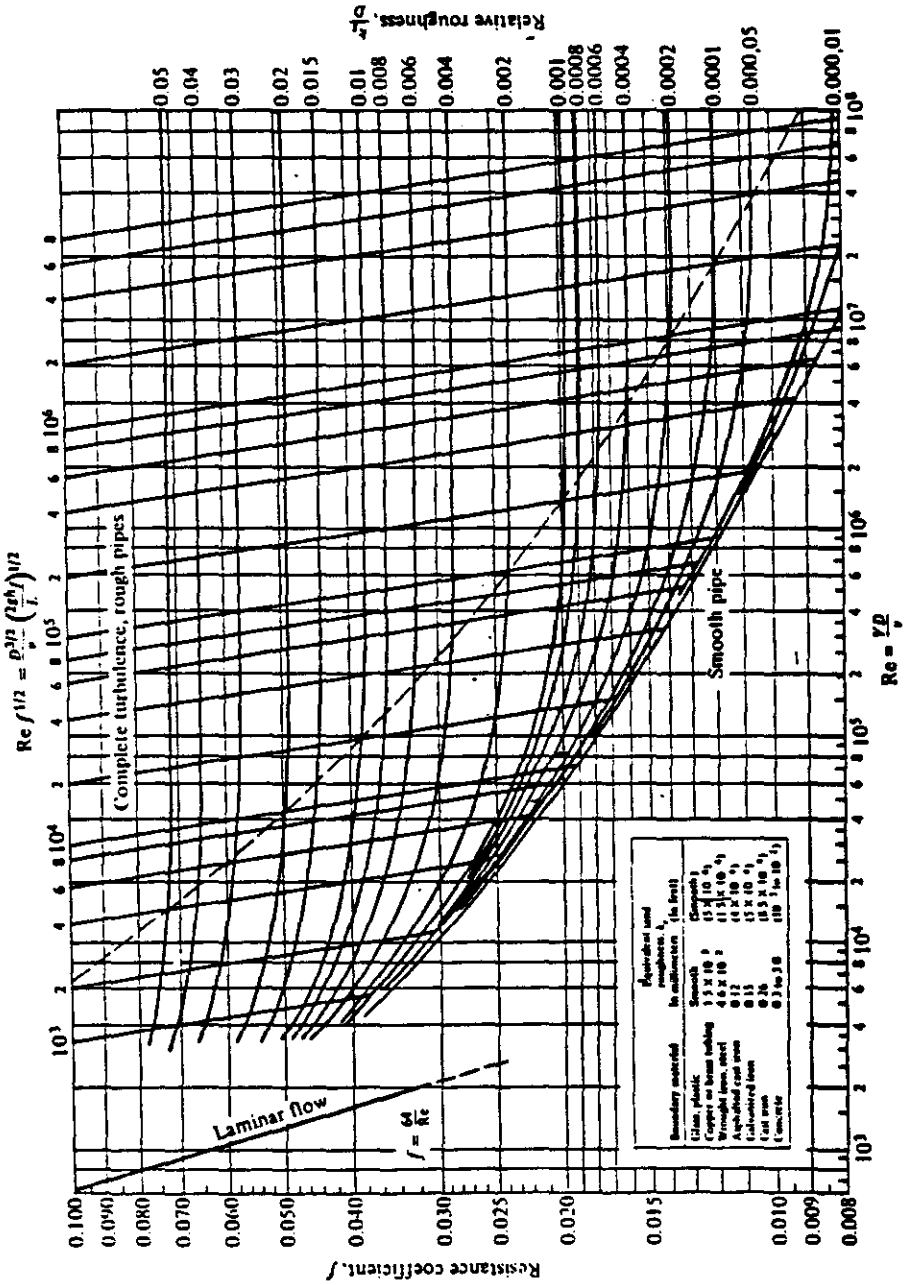

FIGURE 10-8 Resistance coefficient f versus Re. Reprinted with minor variations. [After Moody (18). Reprinted with permission from the A.S.M.E.]

Figure 8