SCIPP-93-18

SCIPP 93/18
June 1993

THE SEARCH FOR HEAVY MAJORANA NEUTRINOS IN LINEAR e^-e^- COLLIDERS

Clemens A. Heusch
PPE-Division, CERN, Geneva, Switzerland,
and
Institute for Particle Physics,
University of California, Santa Cruz, California

FERMILAB
JUL 13 '99
LIBRARY

13

Abstract

Operating the planned linear colliders of the next generation in an e^-e^- (instead of e^+e^-) configuration opens up the possibility of observing the production of W^-W^- pairs, mediated by heavy Majorana neutrino exchange.

We estimate rates for a reasonable scenario of masses and mixing angles, and point out that, for massless light neutrinos, this may be the only practical way to check the Majorana vs. Dirac character of neutrinos with heavy ($\geq$ 1 TeV) Majorana masses.

Invited talk at the Rencontre de Physique de la Vallée d'Aoste, La Thuile, Italy.
March 7-14, 1993.

1) e^-e^- capabilities of e^+e^-colliders.

It has become increasingly clear that for the next generation of particle accelerators, hadron colliders will not be likely to cover the full spectrum of discoveries we expect both within and beyond the Standard Model. Rather, a well-defined subset of physics topics may well find itself best and most promisingly investigated in e^+e^- collisions beyond the reach of SLC, LEP, and even LEP2. For these pursuits, electrons and positrons will be accelerated in linear configurations; while there is no machine concept in the state of maturity that would make a proposal to build such a device possible at this time, there is little doubt that colliders consisting of two linear accelerators with E = 0.25 - 0.5 TeV each can be built with available or clearly impending technology. In fact, several realistic schemes are being pursued in various laboratories[1)], and luminosities on the order of 10^{33} to 10^{34} cm^{-2} sec^{-1} appear reasonably attainable.

It is a quirk of particle physics history that in the long and utterly successful sequence of particle collisions using storage rings, only the first generation used electrons for both incoming beams. Not since the initial QED tests of the Princeton-Stanford project[2)] has there been a serious discussion of e^-e^- colliders. In today 's address, I will show that among a number of desirable and possible tests of our present-day view of particle interactions, the vitally important search for massive neutrinos will be enormously helped by the implementation of an electron-electron version of the Next Linear Collider (NLC) or Teravolt Linear Collider (TLC). e^-e^- collisions permit, in the absence of the annihilation graph that dominates e^+e^- collisions at presently available projects, a number of sensitive studies both within and beyond the Standard Model of particle interactions.

To illustrate the main points that affect the notion of installing an e^-e^- option of an NLC/TLC from the machine side, imagine an arbitrary linear collider schematic (Fig. 1) : clearly the basic optical design does not change, but there are some obvious advantages and disadvantages for the e^-e^- configuration.

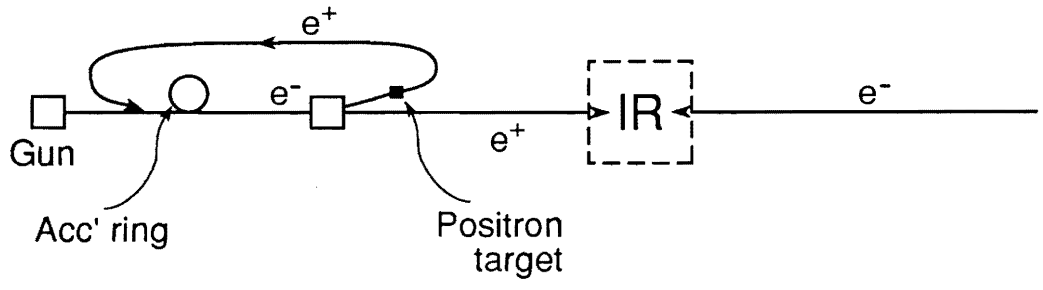

Fig. 1: Schematic view of an e^+e^- Linear Collider. The interaction region is indicated as I.R.

e^-e^- Advantages : * There is no need for a positron source or for an e^+ accumulator/cooling ring;
* More bunches may make higher intensities feasible;
* Both incoming beams can be polarized longitudinally as well as transversely;
* There is no "background" from e^+e^- annihilation events for rare "new-physics" events;
* Easy compatibility with $\gamma\gamma$ and γe physics efforts is guaranteed.

e^-e^- Disadvantages :
* There is no luminosity enhancement due to the so-called beam-beam pinch caused by strong Coulomb forces between e^+ and e^-; rather
* We expect a spot size disruption instead of contraction;
* The problematic disposal of the beams has to be designed downstream of the interaction.

There are ingenious schemes that make the overcoming of these disadvantages appear likely, and we will assume in the following that an e^-e^- version of the planned NLC and TLC machines can be incorporated if a convincing physics motivation can motivate the effort.

2) Topics in e-e- Physics of Major Interest

We briefly enumerate a number of important physics concerns that can be studied in e^-e^- collisions at high energies and high luminosities.

a) Within the Standard Model : e^-e^- interactions at high densities are calculable within the framework of Quantum Electrodynamics (QED). The graphs to be considered are legion, and can be evaluated for possible exotic effects, such as non-linear QED terms. Moreover, sensitive electroweak tests can be performed by interference studies using polarized incident beams. For the study of $\gamma\gamma$ physics, which has played a somewhat subservient role to the e^+e^- annihilation process in all electron colliders to date, it will be interesting to see it advance to the place of the principal producer of hadrons in e^-e^- collisions. Note that, for a number of important Standard Model processes that open up at TLC energies, e^+e^- annihilation permits the study only of $J = 1$ states, whereas $\gamma\gamma$ has access to the $J = 0.2$ channels. Similarly, γe^- collisions permit the investigation of the photon structure function[4].

b) Beyond the Standard Model : It has been frequently mentioned that novel contact interactions can be studied, at energies well below their characteristic mass scale Λ, by means of an effective Lagrangian

$$L_{eff} = L_{SM} + \frac{g}{\Lambda^2} (\bar{f}_4 \Gamma e) (\bar{f}_3 \Gamma e). \tag{1}$$

The new second term on the RHS. of eq. 1 will lead to a hard contribution that increases linearly with Q^2 and s. It therefore becomes more prominent with rising energy and momentum transfer. As an example, we mention studies of electron compositeness[5]. In addition, there is a whole wish list of more exotic inhabitants of larger symmetry groups, such as doubly charged dileptons[6] and an enriched Higgs sector[7], containing doubly charged Higgs bosons. Both of the latter phenomena could obviously lead to s.-channel poles with spectacular discovery possibilities.

A unique experimental signature could be provided by another process that may prove vital for our understanding of the lepton spectrum, as detailed in the next sections.

3) The Process $e^-e^- \to W^-W^-$

W pair production is one of the most important processes that will be studied by LEP2 and by the e^+e^- NLC. The two principal Standard Model graphs involved are seen in Fig. 2, and their phenomenology has been extensively studied[8]. W pair production in the exotic channel :

$$e^-e^- \to W^-W^- \tag{2}$$

can proceed, in analogy to the first graph in Fig. 2, if the exchanged neutrino has a Majorana mass, as illustrated in Fig. 3.

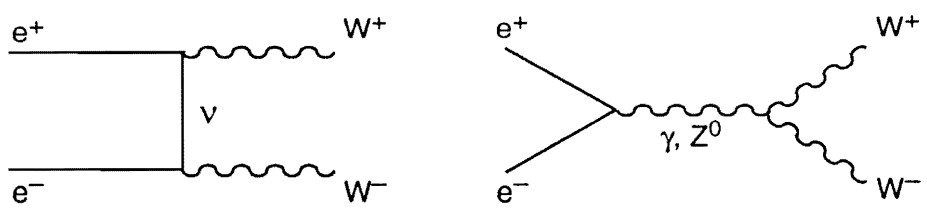

Fig. 2: Leading graphs for W^+, W^- production in e^+e^- collisions

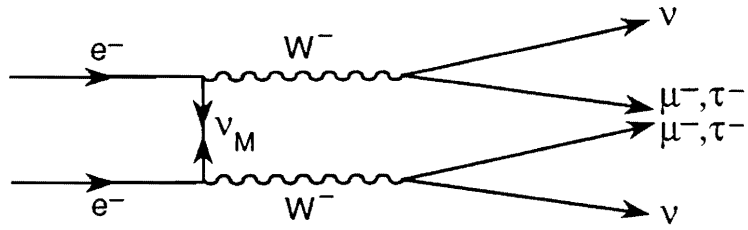

Fig. 3: The leading graph for W^+, W^- production in e^+e^- collisions, with Majorana neutrino exchange. We have added W^- leptonic decays to indicate the most obvious detection schemes.

Note that there is a broad class of theories where it is natural that the four Dirac neutrino helicity states

$$\upsilon^D = \begin{pmatrix} \upsilon_D^{\uparrow} \\ \upsilon_D^{\downarrow} \\ \bar{\upsilon}_D^{\uparrow} \\ \bar{\upsilon}_D^{\downarrow} \end{pmatrix}$$

are replaced by Majorana neutrino singlets:

$$\upsilon_M = \begin{pmatrix} \upsilon_M^{\uparrow} \\ \upsilon_M^{\downarrow} \end{pmatrix};$$

$$N_M = \begin{pmatrix} N_M^{\uparrow} \\ N_M^{\downarrow} \end{pmatrix}.$$

υ_M is a light, potentially massless, state, whereas N_M is a heavy neutrino. The above structure of the lepton sector may well be replicated for all 3 generations.

Recall that, for massless neutrinos, ν_D and ν_M are not definable as different states, except in case there are right-handed couplings. This is known as the practical Dirac/Majorana confusion theorem.

For $m_\nu > 0$, the only known way to distinguish between the Dirac and Majorana characters of neutrinos has been the neutrinoless double beta decay process :

$$A^N \rightarrow A^{N+2}\, e^- e^- ,$$

the salient part of which is precisely the inverse of the graph shown in Fig. 3. The amplitude for this process is proportional to an effective neutrino mass and the nuclear matrix elements N for a spatial overlap of two down quarks :

$$\text{Amp}\ (\beta\beta_{\text{no}\,\nu})\ \alpha\ m_{\text{eff}}\, N. \qquad (3)$$

Quantitative model calculations of such matrix elements are problematic[9]. At all events, this extremely soft process is not very sensitive for the detection of very heavy masses of Majorana neutrinos : there is a mass suppression factor $(m_N)^{-2}$ in the amplitude for radial overlap that could permit the transitions.

In a recent investigation of the usefulness of e^-e^- collisions for the discovery of very massive Majorana neutrino masses, P. Minkowski and I have tried to cover a wide parameter space of masses and mixing angles. It turns out that the process (2) can indeed well serve to set stringent lower mass limits on heavy neutrinos that have recently become of major interest[10] in other contexts, if not outright to their discovery.

Let us assume the availability of polarized e^- beams to test different chiral couplings. We can thus first evaluate the case where we permit the existence of W_L and W_R bosons for the graphs of Fig. 4.

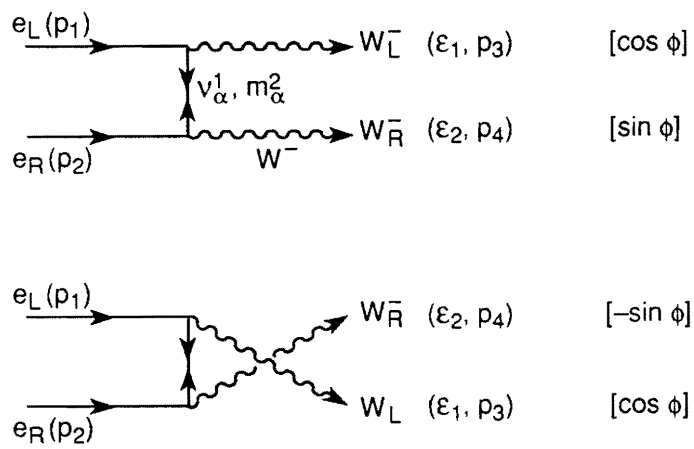

Fig. 4: Graphs for the amplitude $A\left[\left(e_L^-, p_1; e_R^-, p_2\right) \to W^-\left(\varepsilon_1, p_3\right) W^-\left(\varepsilon_2, p_4\right)\right] = A_{LR}\left(\varepsilon_1 \varepsilon_2 P\right)$

In this scenario, we assume two distinct chiral couplings $\nu_e W_L e_L$ and $N_e W_R e_R$ and $g_{W_L} = g_{W_R}$ = (in this symmetry limit) g_W.

Moreover, we take the existence of three light (ν_i) and three heavy neutrinos (N_i) with masses under (TeV) for granted.

To calculate the diagrams of Fig. 4, we have to obtain the mixing matrices that transform the weak interaction eigenstates

$$\nu_i = \begin{pmatrix} \nu_i = 1...3 \\ N_i = 4...6 \end{pmatrix} \qquad i = 1 \ldots 6$$

to mass eigenstates

$$\hat{\nu}_\alpha = \begin{pmatrix} \hat{\nu}_{\alpha = 1...3} \\ \hat{N}_{\alpha = 4...6} \end{pmatrix}$$

We do so by means of a unitary 6x6 matrix

$$\nu_i = \bar{U}_{i\beta}\vartheta_\beta \;;\; \vartheta_\alpha = U_{j\alpha}\nu_j \qquad (i, j, \alpha, \beta = 1 \ldots 6) \tag{4}$$

which we obtain from the Lagrangian

$$L_M = \frac{1}{2}\left(\nu_i^\gamma \varepsilon_{\delta\gamma} M_{ij} \nu_j^\delta + \text{h. c.}\right) \qquad (i, j = 1 \ldots 6) \tag{5}$$

by substituting $\qquad M = U\, m_D\, U^{-1}. \qquad (6)$

m_D is a diagonal matrix, so that

$$M_{ij} = U_{i\alpha}\,(m_D)_\alpha\, U_{j\alpha}\,. \tag{7}$$

We then have the Majorana mass matrix (6x6)

$$M_{ij} = \begin{pmatrix} O & \mu^T \\ \mu & M \end{pmatrix}, \tag{8}$$

where M, the major Majorana mass term, is expected[10] to be of order 1 TeV.

The $e^-e^- \rightarrow W^-W^-$ amplitudes will now contain the mixing matrix combinations

$$\eta_\alpha = U_{e\alpha}\, U_{E\alpha}^{-1} \text{ with } \sum_{\alpha=1}^{6} \eta_\alpha = 0 \tag{9}$$

Note that the subscript e, as usual, denotes an electron neutrino where as E refers to the lightest of the three heavy right-handed neutrinos ($\nu_E = \nu_4$).

For the case at hand, the left- and right-handed W bosons will mix as

$$\begin{aligned} W_{\mu L} &= \cos\phi\, W_\mu - \sin\phi\, W'_\mu, \\ W_{\mu R} &= \sin\phi\, W_\mu + \cos\phi\, W'_\mu, \end{aligned} \tag{10}$$

whereW' is a heavy gauge boson. We can now determine the amplitudes with two couplings of different chirality

$$A_{LR} = (\varepsilon_1, \varepsilon_2, P) = \frac{g_W^2}{2} \sin\phi \cos\phi\, A^{red}, \tag{11}$$

and the reduced amplitudes are of the form

$$A^{red} = F(t) \sum_{\alpha} \eta_\alpha \frac{1}{f_\alpha - z} + F(u) \sum_{\alpha} \eta_\alpha \frac{1}{f_\alpha + z}, \tag{12}$$

$$\text{with } f_\alpha = \frac{m_\alpha^2 + E^2 + q^2}{2Eq} \text{ and } z = \cos,$$

in an otherwise obvious notation. The important feature is that, of the four reduced amplitudes defined in terms of the final-state W helicities $\varepsilon_1, \varepsilon_2$ as transverse or longitudinal,

$$A^{red}_{tr.\,tr.}, A^{red}_{tr.\,long.} = A^{red}_{long.\,tr.}, A^{red}_{long.\,long.},$$

Only one has an energy-dependence typical of a hard scattering process :

$$A^{red}_{long.\,long.} = s\, \Sigma_\alpha \eta_\alpha \left(\frac{1}{f_\alpha - z} + \frac{1}{f_\alpha + z}\right)\left(1 + \frac{q^2}{E^2} - 2\frac{q}{E} f_\alpha\right). \tag{13}$$

This is a promising quantity, where contributions from light neutrinos ($\alpha = 1 \ldots 3$) are suppressed at $\sqrt{s} \gg m_W$, $f_\alpha \approx 1$: $A_{long\,long}$ will dominate the process of Fig. 4, and will lead to rates we can determine

$$A_{long.\,long.} = 2\sqrt{2}\, G_F s \underbrace{|\sin\phi \ \cos\phi|}_{V} \underbrace{|\Sigma_\alpha \eta_\alpha|}_{\eta^H}.$$

For the parameter range $\frac{g}{E} \to 1$, $\sqrt{s} >> m_W$, $m_N >> \sqrt{s}$,

$$\sigma_{long\,long}(e_R^- e_L^- \to W_R W_L) \cong \sigma_0(s) |V\eta^H|^2,$$

$$\text{with } \sigma_0(s) = \frac{G_F{}^2 s}{4\pi} \tag{14}$$

$$= \sigma^* \left(\frac{\sqrt{s}}{500\,\text{GeV}}\right)^2, \tag{15}$$

and $\sigma^* = 1.054$ nb. The boson mixing parameter $V = \sin\phi \cos\phi$ for the W_L, W_R can be estimated from evidence on lepton universality in quark βdecay[11]; similarly , limits from experiments on neutrino-less double β decay indicate that

$$|V_\eta{}^H| \leq (2.1)\, 10^{-7}.$$

This puts the attendant cross section out of experimental reach :

$$\sigma_{\text{long long}}\,(e^-_L\, e^-_R \rightarrow W_L\, W_R) \leq 4.7 \times 10^{-8} \left(\frac{\sqrt{s}}{0.5\ \text{TeV}}\right) [\text{fb}].$$

Recall that machine experts are discussing an NLC of luminosities 10 fb^{-1} year^{-1}!

We therefore abandon the W_L W_R scenario and limit ourselves to same-chirality vertices, starting from $e^-_L\, e^-_L$ as in Fig. 5.

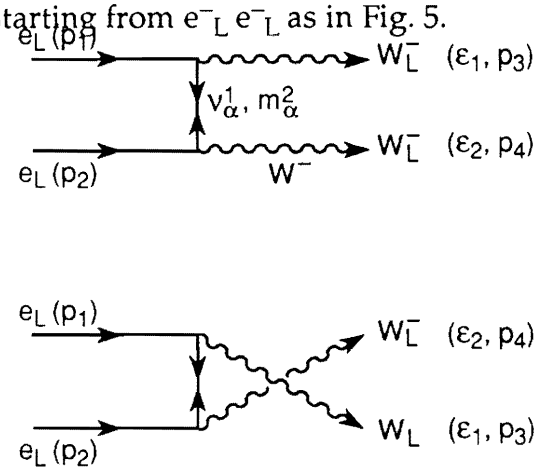

Fig. 5: Graphs for the amplitude $B\left[\left(e^-_L\,,p_1\,;e^-_L\,,p_2\right)\rightarrow W^-\left(\varepsilon_1\,,p_3\right)W^-\left(\varepsilon_2\,,p_4\right)\right]=B_{LL}\left(\varepsilon_1\varepsilon_2 P\right)$

In analogy to the $e_L\, e_R \rightarrow W^-\, W^-$) treatment above, we determine the amplitudes $B\,(e^-_L\, e^-_L \rightarrow W^-\, W^-)$ denoted by the two W bosons' helicities, ε_1 and ε_2. Again, the longitudinal W's lead to the dominant term

$$B_{\text{long long}} = \frac{g_W^2}{2}\left[\varepsilon_1\,\varepsilon_2\,(G\,(t) - G\,(u)) + \left(\varepsilon_1{}^0\,\varepsilon_2{}^3 - \varepsilon_1{}^3\,\varepsilon_2{}^0\right)(G\,(t) - G\,(u))\right],$$

$$\text{where } G\,(t) = \sqrt{s}\sum_{\alpha=1}^{6}(U_{e\alpha})^2\,\frac{m_\alpha}{m_\alpha^2 - t}\,. \tag{16}$$

Explicitly, this leads to

$$B_{\text{long long}} = \frac{g_W^2}{2q}\sum_\alpha \xi_\alpha\,\frac{m_\alpha^2}{m_W^2}\left(\frac{1}{f_\alpha - z} + \frac{1}{f_\alpha + z}\right) \tag{17}$$

$$\text{where } \xi_\alpha = (U_{e\alpha})^2\, m_\alpha\,;\ \sum_\alpha \xi_\alpha = 0 \tag{18}$$

Performing the appropriate integrations, we arrive (for incoming left-handed electrons) at the total cross sections

$$\sigma_{LL} = \frac{G_F^2}{\pi}\left\{3\left|\xi^{(\upsilon)}\right|^2 + \left|\xi^{(N)}\right|^2\right\} ,$$
$$= \sigma^{(\nu)} + \sigma^{(N)} . \tag{19}$$

The first of these terms, $\sigma^{(\nu)}$, due to light-neutrino exchange, is strongly limited by neutrinoless double β decay experiments similar to the case discussed for A_{LR} above, and will not be detectable[11]. The second term is characterized by

$$\xi^{(N)} = \sum_A E_A \xi_A$$
$$(A = \alpha - 3 = 1...3)$$
$$= \frac{s}{2}\sum_A \frac{U_{eA}^2}{(m_N)_A}, \tag{20}$$

and has the stand-out factor of s determining its energy dependence, in the kinematic regime defined by

$$E_A = \frac{s}{2\left(m_N^2\right)_A << 1}.$$

Here, we choose the limiting case of vanishing light-neutrino masses,

$$(m_\upsilon)_\alpha = 0 \qquad \alpha = 1, 2, 3.$$

Nevertheless, the mixing between light and heavy neutrinos is assumed to be considerable, so that

$$U_A \neq 0 \qquad A = 1, 2, 3;\ a = 4, 5, 6.$$

For heavy neutrinos E, M, T, we can safely evaluate the cross-sections involving masses in the TeV range. We define

$$\frac{1}{m_{red}} = \sum_A \frac{1}{(m_N)_A}, \tag{21}$$

and the mixing parameters

$$\eta^{(N)} = \frac{2m_{red}}{S}\,\xi^{(N)} = \sum_A U_{eA}^2 \frac{m_{red}}{(m_N)_A},$$
$$\eta^{(\upsilon)} = \frac{1}{m_{red}}\,\xi^{(\upsilon)} = \sum_A U_{eA}^2 \frac{(m_N)_A}{m_{red}}. \tag{22}$$

In our regime ($s << m_A^2$) this leads to the inequality

$$\eta^{(N)} >> \eta^{(\nu)},$$

and to an estimate for the cross-section for heavy-neutrino exchange :

$$\sigma^{(N)} = \frac{G_F^2}{4\pi} s \left(\frac{s}{m_{red}^2}\right) |\eta^{(N)}|^2. \tag{23}$$

Recalling our definition for $\sigma_0(s) = \sigma^* \left(\frac{\sqrt{s}}{500\,\text{GeV}}\right)^2$, this compares favorably to the A_{LR} case eq. 14 :

$$\sigma^{(N)} = \sigma_0(s) \frac{s}{4m_{red}^2} |\eta^{(N)}|^2. \tag{24}$$

Note above all that $\sigma^{(N)} \propto s^2$ as long as $\sqrt{s} \leq 2m_{red}$.

How do we determine the mixing parameter $\eta^{(N)}$? We can check on other processes where $\eta^{(N)} \neq 0$ will induce lepton flavor non-conservation in muon and τ decays, and look at deviations from lepton flavor universality in $\pi \to \mu$ vs. $\pi \to e$, $\mu \to e$ vs. $\tau \to \mu$ decays. etc... We have done this with some care, considering the latest experimental evidence[11] in the framework of vanishing light-neutrino masses.

Our inference is the following : if we assume that the mixing between the 3 heavy and the 3 light ν generations is about equal (an assumption that is very conservative), then

$$|\eta^{(N)}| \leq (2 - 50)\, 10^{-4}. \tag{25}$$

Note that it would be much more likely to find an enhancement of E/e mixing over that of M/e, but such favoring of individual matrix elements was not incorporated into the model.

<u>Experimental aspects</u> :

Will these estimates lead to an experimentally detectable signal ?
The cross-section has a characteristic energy dependence $\sigma(e^- e^- \to W^- W^-) \approx s^2$ for $\sqrt{s} << 2m_{red}$ which, we believe, will hold reasonably well up to $\sqrt{s} << 2m_{red}$. Taking m_{red} to be 1 TeV, we find a cross-section

$$\sigma^{(N)} = 1\,\text{fb} \left(\frac{\sqrt{s}}{0.5\,\text{TeV}}\right)^4 \left|10^3 \frac{\eta^{(N)}}{2}\right|^2 \tag{26}$$

with $|\eta^{(N)}| \leq (2 - 50) \times 10^{-4}$.

Depending on the resourcefulness of machine builders, the luminosities for the $e^- e^-$ version of an NLC or TLC may vary. Table I gives two scenarios for resulting annual event numbers for the canonical 10^7 seconds/year :

Table I

	L [$cm^{-2} sec^{-2}$]	Event numbers/year for $\lvert\eta^{(N)}\rvert = 2 \times 10^{-4}$	$\lvert\eta^{(N)}\rvert = 5 \times 10^{-3}$
NLC	10^{33}	0.1	6
	10^{34}	.1	60
TLC	10^{34}	2	1.000
	10^{35}	20	10.000

For the more optimistic assumptions on $\lvert\eta^{(N)}\rvert$ and on machine luminosities, these are certainly respectable event rates. Are they experimentally discernible ? Back-to-back geometry in the final state will certainly lead to clearly recognizable signatures of such decay channels as :

$$
\begin{aligned}
e^- e^- \rightarrow W^- W^- \quad &\rightarrow \quad \mu^- \mu^- + p_{T\,\text{missing}}, \\
&\rightarrow \quad \mu^- \tau^- + \quad '' \quad , \\
&\rightarrow \quad \tau^- \tau^- + \quad '' \quad , \\
&\rightarrow \quad e^- \mu^- + \quad '' \quad , \\
&\rightarrow \quad e^- \tau^- + \quad '' \quad , \\
&\rightarrow \quad \text{lepton} + \text{jet} + \quad '' \quad .
\end{aligned}
\tag{27}
$$

A general-purpose detector for the NLC $e^+ e^-$ version is presently expected to have a 10^0 cone around the forward/backward directions uninstrumented : this would not seriously impair our detection scenario due to the considerable p_T missing that characterizes the events.
What are the likely backgrounds ?

- Multihadrons from $\gamma\gamma \rightarrow Q\bar{Q}$: heavy-quark decays may well introduce hard μ, τ into the final state. The overall cross section of ~ 300 nb will not likely lead to events where neither the hadron jets nor the electrons are detected.

- QED pair production : pairs of $\mu^+\mu^-, \tau^+\tau^-$ may well be generated in large quantities, but the observation of only two like-sign leptons at large p_T is essentially excluded.

- W^-W^- production by Standard Model graphs : $\gamma\gamma \rightarrow W^+W^-$ will not lead to confusion, but $e^-e^- \xrightarrow{\gamma, Z^0} \nu W^- \nu W^-$ is an allowed S.M. process. This needs large momentum transfers to produce the W pair, is severely suppressed. It cannot occur for $e_R e_L$ in the initial state.

- Exotica : doubly charged Higgs bosons[7] and doubly charged dileptons[8] will also lead to like-sign leptons pairs, but there will not be the characterisitic missing p_T. There are also various supersymmetry graphs[12] that might give dilepton backgrounds; again, they are unlikely to have the requisite topologies to confuse our detection scheme.

Detailed Monte Carlo evaluations for given detector configurations will have to be implemented for quantitative background information. The unique signatures of the processes of eq. 27 are likely to survive even on the few-event level.

5) Outlook

From the broader point of view of a full exploration of Standard-Model as well as Beyond-the-Standard-Model physics, the implementation of an e^-e^- version of the next generation of linear colliders appears highly promising[13].

Specifically, the process $e^-e^- \rightarrow W^-W^-$ promises to lead to unique final-state configurations that may well permit the identification of novel phenomena based on the observation of only a few events. Our evaluation of the cross sections for this process, mediated by the exchange of a heavy Majorana neutrino, makes it a plausible candidate for a major detection of fundamental importance. Indeed, should the light neutrinos be strictly massless, this process may provide the only means for an experimental proof of the existence of heavy Majorana masses, beyond the detection possibilities of neutrinoless double β decay.

No special detector needs are raised by this search, beyond the capabilites of the general-purpose e^+e^- detector. Great emphasis should, on the other hand, be placed on the development of beam containment and antidisruption techniques that are needed for highest-luminosity operation of e^-e^- colliders.

A powerful means for telling signals and backgrounds apart is the possibility, unique for e^-e^- colliders, to have two highly polarized beams of full power in the initial state. The dramatic energy dependence of the signal process is a further strong point in favor of a determined search.

Acknowledgment

Professors G. Bellettini and M. Greco and the dedicated staff of the Rencontre de Physique de la Vallée d'Aoste have again outdone themselves by providing a stimulating atmosphere in the unique ambiance of La Thuile. They all deserve our sincere appreciation.

References

1] See, e.g., J. Rossbach, DESY M-93-1; to be published in Proc. 1992 Linear Accelerator Conference, Ottawa, Canada.

2] W.C. Barber, B. Gittelman, G.K. O'Neill, B. Richter; Phys. Rev. D3, 2796 (1971); see also : CERN Report 61-22, 57 (1961).

3] J. Spencer; in Proc. of 1993 Linear Collider Workshop, Waikoloa, Hawaii (to be published). P. Chen, ibidem.

4] D. Bauer, D.L. Borden, D.C. Miller, J. Spencer; SLAC-PUB-5816 (1992).

5] T. Barklow; Contribution to the 1987 Linear Collider Workshop, Waikoloa, Hawaii (1993).

6] P. Frampton, Phys. Rev. Lett. 69, 2889 (1992); J. Agrawal, P. Frampton, D. Ng, Nucl. Phys. B386, 267 (1992).

7] P. Langacker et al., Snowmass Summer Study, 771 APS-DPF (1984).

8] E. Yehudai, SLAC Report 383 (1992).

9] W.C. Haxton, G.J. Stephenson, Proc. Part. Nucl. Phys. 12, 409 (1984)

10] Calculations with more restrictive assumptions have been performed by D. London, G. Belanger, J.N. Ng, Phys. Lett. B188, 155 (1987) and by J. Maalampi et al., Helsinki preprints HU-TFT-92-10 and 17 (1992).

11] See, e.g., W. Buchmüller, C. Greub, P. Minkowski, Phys. Lett. B267, 395 (1991).

12] C.A. Heusch, P. Minkowski, CERN-TH 6606 (1992), submitted to Nuclear Physics.

13] F. Cuypers, G.J. van Oldenborgh, R. Rückl, CERN-TH 6807 (1993).

14] Many different aspects have been addressed in the e-e- session of the 1993 Linear Collider Workshop, Waikoloa, Hawaii. See the forthcoming proceedings volume (J. Harris, ed.).