CONSTRUCTION AND MECHANICAL QUALIFICATION OF SCINTILLATING FIBER DOUBLET RIBBONS

J. CHARLES COOPER
Physics Department, Purdue University, 1396 Physics Bldg
West Lafayette, IN 47907-1396, USA

ABSTRACT

Ribbons consisting of 815 μm diameter polystyrene scintillating fiber, in a doublet structure, have been produced and studied. The construction technique employs a high precision v-grooved aluminum jig, a simple clamp, and water-based adhesives. The ribbons exhibit local rigidity yet global flexibility. They are suitable for high-resolution (< 100 μm) charged particle tracking detectors. Measurements of the lattice spacing, performed with a coordinate measuring machine, show that the structure is consistent to $\sigma = 20$ μm. The test ribbons contained 255 fiber elements and were 183 cm long.

1. The Purpose of Ribbons

A typical scintillating fiber tracking system will contain roughly 100,000 individual fibers. Each fiber is a basic element of the detector, and so must be placed in a precise fashion. As the fiber is plastic, it cannot be tensioned to be straightened, as would be done with a wire. Fibers must be restrained in all three dimensions along their entire length.

The ribbon concept is a modular approach. By constructing precision modules containing several fibers, the complexity and time consumption of assembling a scintillating fiber tracker are greatly reduced.

As part of the work for the upgrade of the DØ detector at Fermi National Accelerator Laboratory, test ribbons of 255 fiber elements were constructed. The ribbons had a two-layer (doublet) structure, and each was about 2 m long. These were tested for precision via a mechanical means. The ribbons were then used as part of a separate test to attach them to a cylindrical substrate in a precise fashion.[1]

2. Concerns of Tracker Construction

Three important needs of a scintillating fiber tracker have important implications on the construction of ribbons.

First, it is important to maximize the light output of the fibers. There are a number of ways the light yield can be compromised in a typical laboratory environment. The cladding of the fiber can be scarred through careless handling. The fluors, particularly 3-hydroxyflavone (3HF), are sensitive to exposure to cer-

tain types of light, solvents, and gases. Thus special environment and handling procedures are important during the construction process.

Second, the tracker must be a high precision assembly. The ability of the tracker to measure particle momentum is a strong function of the spatial resolution of the entire assembly. Thus, the mechanical properties of the ribbons must be appropriate to other steps in the assembly process. In addition, effort should be directed at controlling those parameters that can only be controlled during the ribbon production process. This allows the maximum amount of "error budget" for other steps.

Third, the material used in constructing ribbons should be minimized. The final product should be mostly fiber by mass so that ribbons will not add unnecessary radiation depth to the tracker.

3. High Precision Construction - Capabilities

A simple model can serve to approximate the spatial resolution of a scintillating fiber tracker. A simple array of close-packed fibers can resolve passing tracks to the level of $\sigma \sim D/\sqrt{12}$. A second layer of fibers, staggered at a half lattice spacing, and well correlated to the first layer, can improve this resolution by a factor of two [Figure 1]. Adding two more correlated layers at a quarter fiber spacing improves the resolution by another factor of two, provided the layers are precisely positioned.

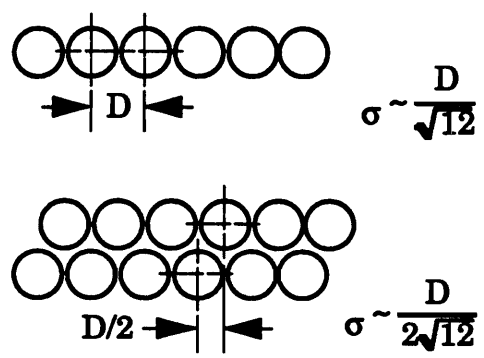

Figure 1: Finer resolution is achieved by using two correlated layers

The two structures shown in Figure 1 are fundamental building blocks of a fiber tracker. They are called the singlet and the doublet, respectively. For an 850 μm lattice spacing, the resolution of these modules according to the model above is $\sigma \sim 245$ μm and ~ 123 μm. The doublet is used as the basic construction element, because the correlation of the two layers is a natural result of close-packing during construction. Multiple doublets [Figure 2] do not naturally fit together in this way, and so deeper structures are formed by placing separate doublets on a cylinder base.

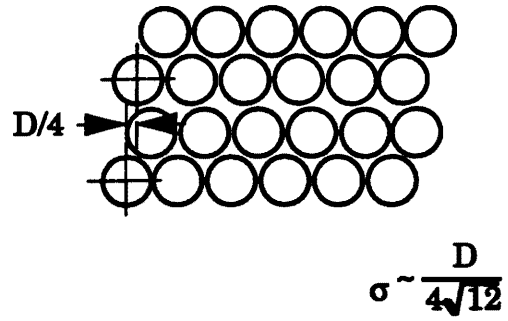

Figure 2: Further refinements in the resolution using two correlated doublets.

The implicit resolution of two quarter-spaced doublets ($\sim$ 60 μm) forms the basic goal in mechanical construction of the tracker. The combined standard deviations of imprecisions introduced in all phases of construction should be less than this amount so that the implicit resolution of the geometry will be the primary limitation in spatial resolution.

The construction of a ribbons is only one of three principal assembly steps. Thus, a placement accuracy much better that 60 μm must be incorporated into ribbon modules.[3]

4. Selective Parameter Emphasis

The construction of a fiber tracker must be viewed as a multistage process. It is important to emphasize at each stage of the process only those parameters which must be controlled or are best controlled there. The test ribbons were constructed with a technique that emphasizes two basic parameters.

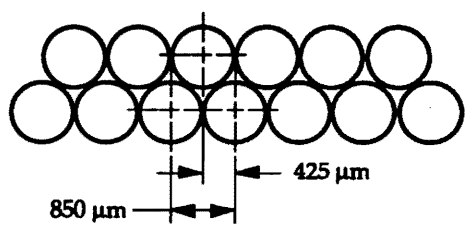

Figure 3: Lattice spacing (850 μm) and layer correlation (425 μm) are the most important parameters in ribbon construction.

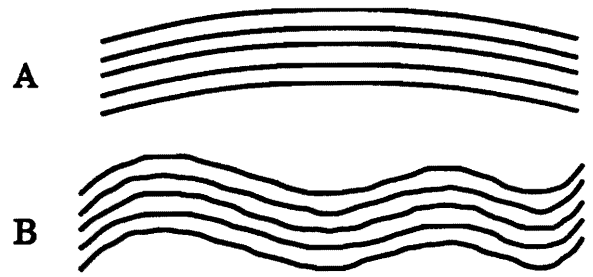

Figure 4: Examples of non-linearities in the ribbons that are best controlled in the ribbon laying phase. In (A), there is a first-order bow, the most common type of problem. In (B) is a more complex shape. For properly constructed ribbons, neither of these affects the lattice spacing or correlation.

First there is the lattice spacing. The distance between consecutive fibers in a singlet must be controlled with high precision and this can only be done at the point of ribbon manufacture.

Second is layer correlation. As discussed in the last section, correlation of layers yields significant resolution gains. Because the doublet is used as the basic unit, the two singlets must be correlated at this stage. These two parameters are illustrated in Figure 3.

Other parameters of the tracker can be determined in other construction phases. An example of this is the linearity of the ribbon [Figure 4]. This is controlled in the ribbon laying process, where the ribbon is forced to conform to a straightened reference as it is glued to a cylinder. This does not have to be controlled when making ribbons, but the module must exhibit appropriate flexibility to do this. By leaving this step to the next stage, we can concentrate on the two parameters mentioned above.

5. The Precision Ribbon Production Jig

Ribbon production begins with a precision jig. It is a free standing, rigid structure with v-grooves along its length for fibers to lay in [Figure 5]. The main imprecisions in this structure are the result of internal stresses and the machining process. The shape is very stable over time.

The jig is produced with a planar, a machine tool designed to make very parallel strokes. This device has $\sim$ 10 ft (3 m) of travel, and so can produce long jigs. The grooves are cut one at a time using a v-shaped tool.

A number of improvements were necessary after the first attempt to make these jigs. It was necessary to recondition the planar so it would have optimal performance. Additionally, running it before production helps it to reach a working

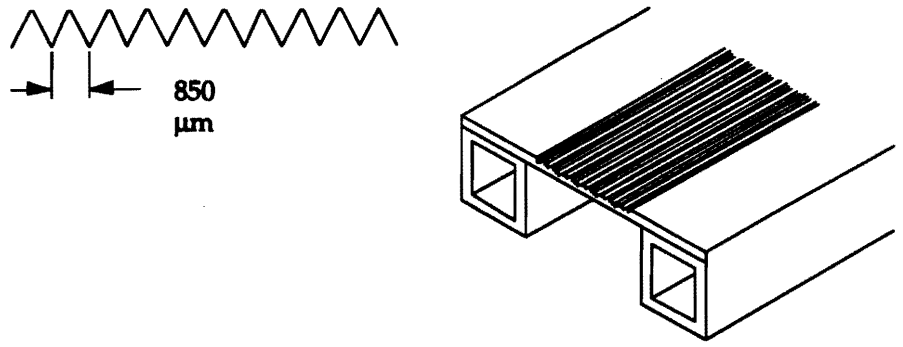

Figure 5: A free-standing v-grooved jig is the basis of the ribbon production technique.

thermal equilibrium. 7075 alloy aluminum, harder than standard for machining capabilities, was used to make the jig. Also, the structure of the jig is meticulously built up, making sure no gaps are left in the structure where it can buckle during machining.

Finally, the finished jig is qualified for accuracy on a coordinate measuring machine (CMM). Figure 6 shows a qualification run on a ribbon production jig. The deviations of the center lines of 8 sample grooves from theoretical location, measured by multiple CMM touches at 20 points along the length, is plotted. Notice all of the points fall within 10 μm. The standard deviation for this set is approximately 5 μm.

6. The Ribbon Production Technique

The production of a test ribbon is about a 12 hour process, though more than one ribbon can be produced at a time by a single person. It begins by cleaning and inspecting the production jig to be sure all residue (from airborne dust and from prior use) is removed. Fibers are then stacked into the v-grooves as shown in Figure 7. Padded clamps are placed over the ribbon every 2-3 inches along its length. Glue (water-based acrylic and urethane polymers) is brushed on the upper surface of the fibers. Small gaps in the lattice (due to variations in fiber diameter) allow the glue to seep into the lattice. It takes overnight for the adhesive to dry.

A few special procedures must be observed in this otherwise simple process. For scintillator with 3-hydroxyflavone (3HF), special light filters are required in the production area. Reasonable care must be taken to reduce dust and dirt. The appropriate consistency of the glue must be determined by trial and error, and is different depending on the fiber size and lattice spacing. Also, all contact with the

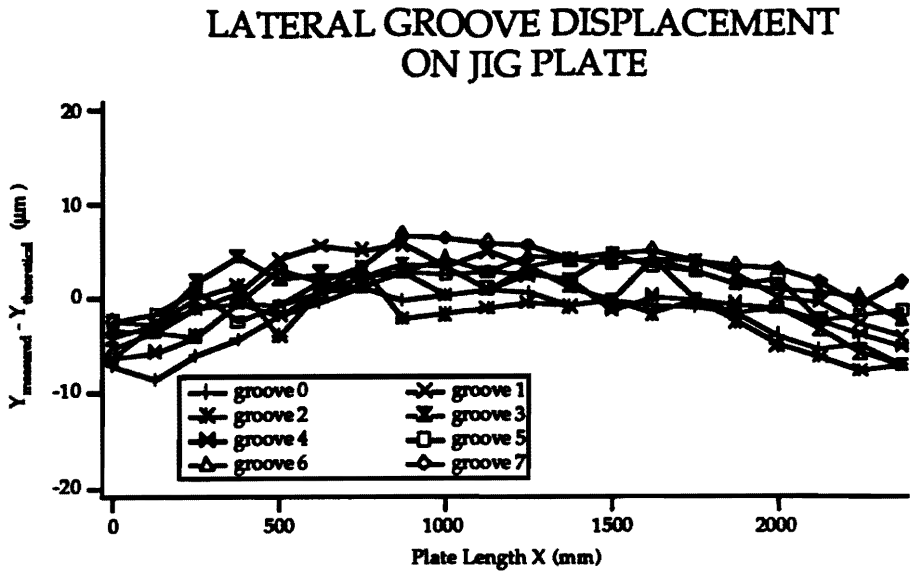

Figure 6: Qualification of a ribbon production jig. Note that the grooves are absolutely and relatively parallel over 2 meters.

fiber must be padded and dust-free.

7. Mechanical Qualification

Ribbons, like the production jigs, must go through quality control checks. The ribbons routinely undergo visual inspection, but to truly qualify a ribbon for accuracy below 50 μm requires a special technique.

The key element in this testing is the Coordinate Measuring Machine (CMM). This is a method for high precision (< 5 μm) measurement by physical contact. The CMM used for these tests is owned and operated by FEPCO, Inc. in Noblesville, Indiana. Similar procedures were used to verify the location of ribbons after adhering them to a cylinder.

Essentially, the CMM articulates a measuring instrument called a probe. The probe used in these tests was a small metal stylus with a rounded tip, radius ~ 100 μm. Upon contact with a fiber, a force of 6 grams will cause a deflection, which breaks an electrical contact, thus informing the CMM to stop and record the position. By taking multiple touches on a single fiber, a circle is fit and the center point of the fiber is determined. See Figure 8.

This process is used iteratively. A test of its repeatability of measurement was performed. Ten fibers in a ribbon were each measured in this fashion 30 times. Figure 9 shows a histogram of the measured values. The distribution indicates a repeatability in the horizontal dimension (across the ribbon) of 1.5 μm. Similar results were also seen vertically.

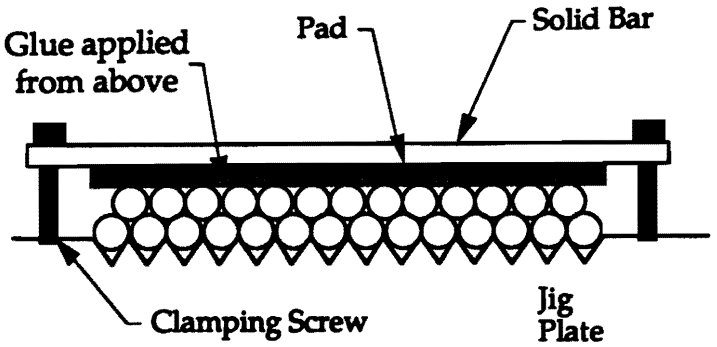

Figure 7: Components of the ribbon production in cross-section.

Figure 10 shows a typical measurement of the lattice spacing of the upper singlet of a test doublet. A test of the lattice spacing of the lower singlet was not possible, but since the construction technique works by transferring accuracy from one singlet to the other, it is inferred that the lower singlet is actually better. Typical standard deviations in the lattice spacing were 20 μm.

The most significant problem noticed was the "shrink" in lattice spacing. A slight (~2 μm per fiber) decrease in the lattice spacing was noticed. It seemed fairly consistent over the entire sample of ribbons. This small error can accumulate over an entire ribbon to substantial proportions (~200 μm) across a ribbon. It was later shown that clamping the ribbons to the production jig overnight would mitigate most of this problem. Therefore, this has become one of the steps in the ribbon laying process.

The consistency of this result was checked at various points along the length of the ribbon, but no attempt was made to measure the linearity of the ribbon along its length. A ribbon lying loosely on a table has poor linearity, since the polystyrene material is not stiff enough to hold its shape over such a distance. As stated before, this parameter was not emphasized in the construction of ribbons; it is a parameter that must be fixed in the next phase of detector construction.

8. Low Mass and Radiation Length

Density measurements of fiber and fiber ribbons show that ribbons made by this construction method have only a 6.6% increase in mass over the mass of the fiber alone. It is believed that because this is a close-packed structure, this is the minimum amount of material that will make ribbons that are appropriately robust. Assuming the density of polystyrene, a doublet ribbon will be ~0.33% of a radiation

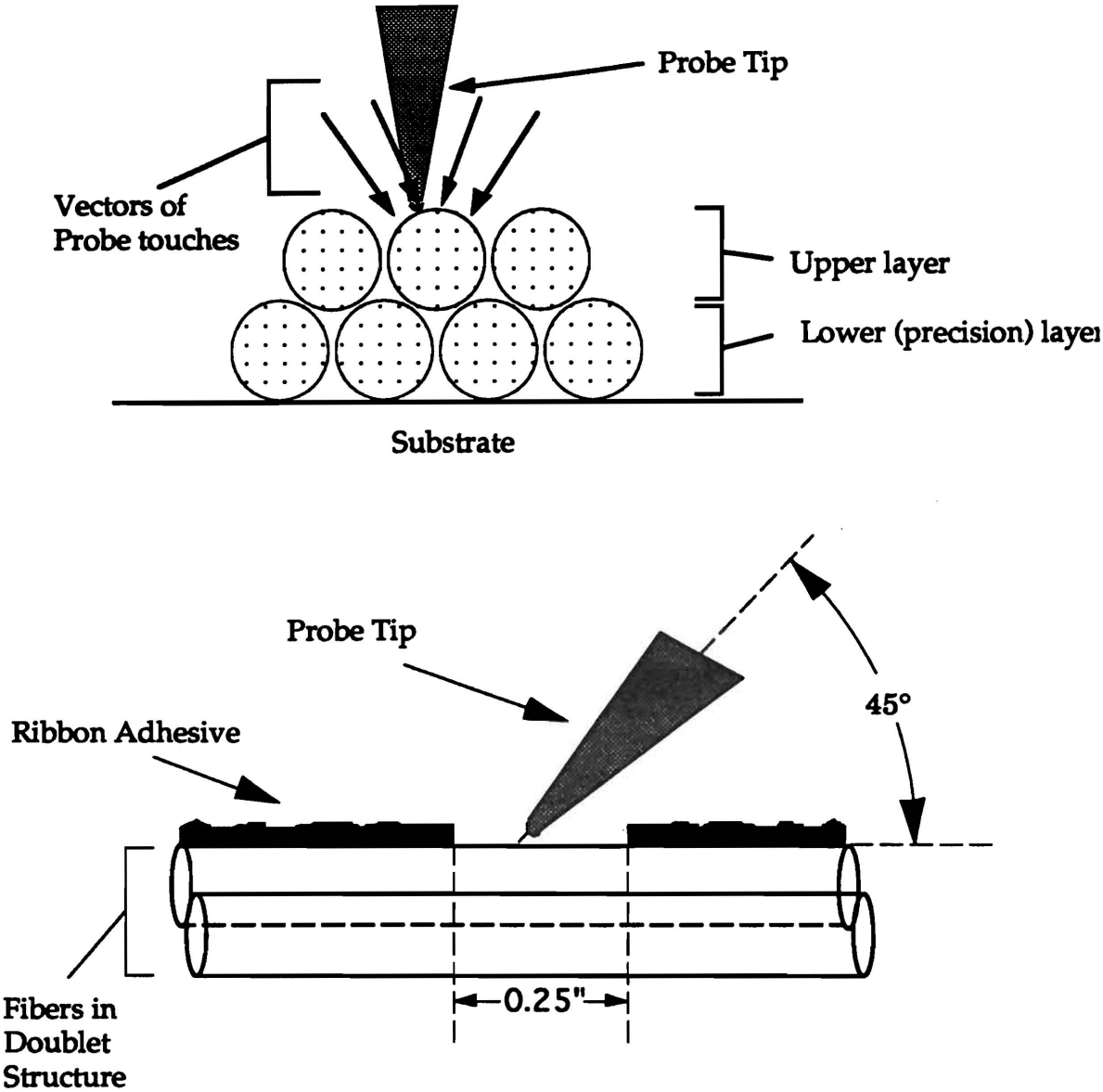

Figure 8: Fibers measured by multiple probe touches with CMM. The probe vectors in to the fiber along several directions. A circle is fit to these points and the process is reiterated.

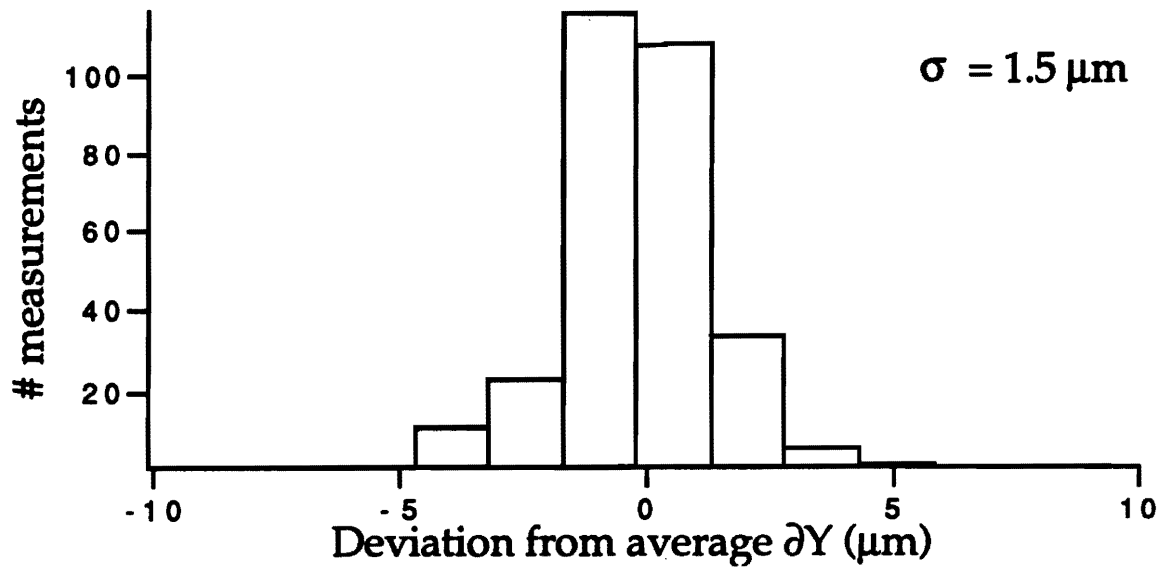

Figure 9: Deviations δY from the average position measured for 10 fibers at 30 measurements per fiber in a test ribbon. On the average the repeatability of the measurement is within 1.5 μm.

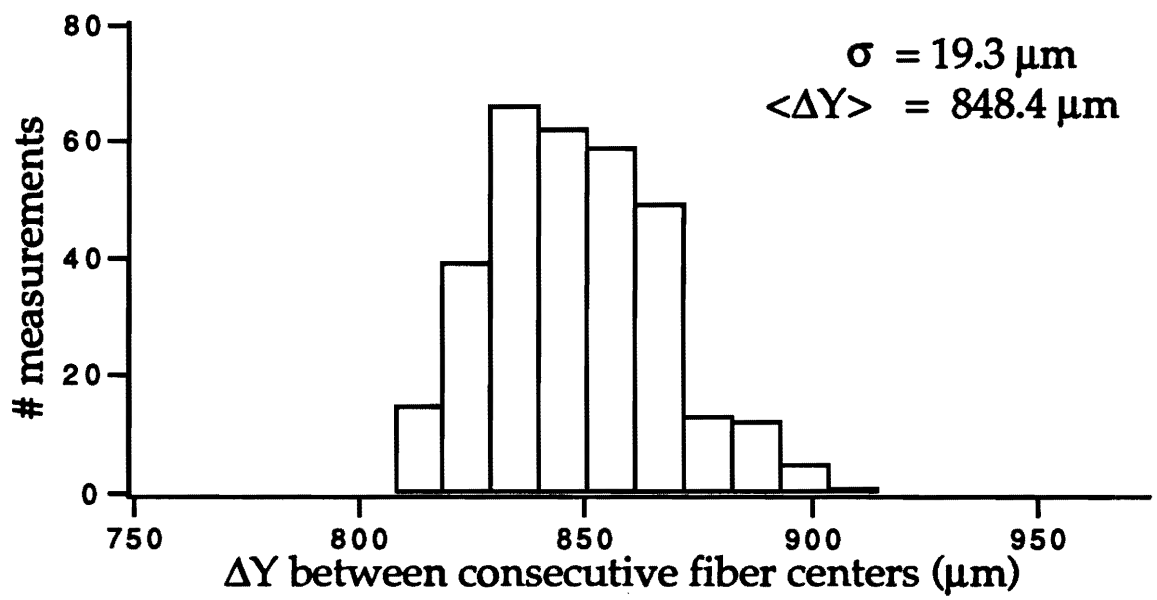

Figure 10: Histogram of the spacing ΔY between adjacent fiber centers in the upper singlet of a test ribbon. The lattice spacing (848.4 μm) is slightly smaller than the target value of 850 μm. The spacing is consistent to within 20 μm. The test ribbon contained 255 fibers total and was 183 cm long.

length for minimum ionizing particles.

9. Summary

- Ribbons accelerate the construction process for scintillating fiber tracking by gathering fibers into robust, accurate modules.
- Doublet structure exploits geometry to provide a simple way of correlating two layers.
- Ribbons must address the needs of a tracker: maximum light yield, high precision, minimum material.
- The focus of ribbon production must be to control lattice spacing and layer correlation.
- The technique utilizes a precision substrate, the jig, machined parallel to $\sigma \sim 5\ \mu$m.
- A water-based adhesive and a simple clamp are used in the production process, performed in a special environment.
- Quality control is performed by CMM, using special numerical control algorithms. Fiber measurements are repeatable to the $\sigma = 1.5\ \mu$m level.
- The lattice spacing of the upper layer in test ribbons has been verified to $\sigma = 20\ \mu$m over 255 channels of 183 cm length.

10. References

1. B. L. Howell, "A Precision Technique For Mounting Scintillating Fiber Ribbons on a Cylinder For Charged Particle Tracking," presented at this workshop.
2. B. L. Howell et al., "Fiber Ribbon Mounting and Test of an Axial Mounting Procedure," DØ Note #2008 (1993).
3. D. S. Koltick, "Accuracy Requirements For the Construction of the D-Zero Scintillating Fiber Charged Particle Tracker," DØ Note #2010 (1992).
4. B. L. Howell et al., "Fiber Ribbon Construction and Testing," DØ Note #1687 (1993).