Scintillating Fiber Charged Particle Tracking at the Superconducting Super Collider

David Koltick

Physics Department, Purdue University
West Lafayette, Indiana 47907

ABSTRACT

Now that the Superconducting Super Collider (SSC) has been cancelled it is important to document the excellent progress that has been made towards achieving chared particle tracking with scintillating fibers in the SSC environment. Issues necessary for good charged particle tracking in a solenoidal magnetic field are discussed. The advantages of a tracking detector made using scintillating fibers are presented. The design uses scintillating fibers of ~1mm diameter and is highly segmented as well as capable of very high data rates. Systems with up to 10^6 channels are simple in design so that "industrialization" can easily be accomplished. Results from the production of prototypes are presented.

1. INTRODUCTION

There are a number of Hadron Colliders being planned: the SSC in Texas but now canceled, the LHC at CERN in Europe and the Main Injector upgrade at Fermilab. Each has great potential to explore very high center of mass energies. However, this is achieved largely by operating at extreme luminosities. For the SSC, the design luminosity is $L=10^{33}$ cm^{-2} sec^{-1} and, in the case of searching for a high mass Higgs boson near 1 TeV, luminosities approaching $L=10^{34}$ cm^{-2} sec^{-1} are required. At design luminosity more than one inelastic collision takes place per beam crossing, every 16 nsec, and more than 10 interactions can take place every crossing at the improved luminosity. The LHC luminosities are a factor of 10 above the SSC design. The Fermilab Main Injector design has instantaneous rates comparable to the SSC.

Such extreme rates, ~60 Megahertz, call for detectors with (1) a high degree of segmentation, capable of very fast response and burst rates, (2) simplicity and reliability because of the inherent need to employ large numbers of the basic detecting element, in an inaccessible location over a long period of time, (3) low cost, in order for the system to be affordable, (4) and finally, the capability to withstand the radiation environment of a hadron collider. With these considerations it is unlikely that older technologies can be made capable of withstanding the environment at 10^{34}. New approaches such as scintillating fibers seem to be the correct choice for a central charged particle tracker in a solenoidal magnetic field. Our goal has been to develop a high rate tracking system appropriate for the SSC, based on the scintillating fiber technology. Such technology makes affordable the prospect of tracking particles with high spatial and temporal resolution, low occupancy and good efficiency[1].

2. ELEMENTS OF A SCINTILLATING FIBER TRACKER

The basic elements of a Scintillating Fiber Tracker (SFT) consists of scintillating fibers, spliced to clear optical wave guide fibers. The wave guide is made of the same

material as the scintillating fiber, except the scintillation dyes are left out. The scintillating fiber typically contains about 1% dopants by weight, which does not alter the fiber's mechanical properties from that of the undoped fiber. The wave guide transmits the scintillation light out of the tracking volume and into a liquid helium cryostat containing a solid state photomultiplier, called a VLPC. The VLPC is sensitive to and optimized for visible light detection, ~0.5μm with 60-70% quantum efficiency. The VLPC will be electrically connected to an amplifier-shaper-discriminator (ASD) which will deliver a single bit of digital information, that the fiber was hit, to the data-taking and trigger electronics. Each of the individual elements described above will in turn be discussed in detail.

3. COMPARISON TO GAS TECHNOLOGIES

Present charged particle tracking technology is dominated by wire chamber technology. This technology operates by drifting electrons through a gas in the presence of a high electric field towards an anode typically ~25 μm in diameter. The original electron signal is amplified by the arriving electrons ionizing the gas near the anode wire. Gains of between 10^4 and 10^6 are typical. Because the wire is tensioned between two accurately machined endplates, the precision comes about from the 2-dimension machining accuracy of the endplates. Groups building vertex chambers have obtained accuracies up to ~3 μm in the machining of these endplates. Vertex chambers have obtained absolute measurement errors of 20 μm-30 μm, limited not by the construction errors but by the electron drift dispersion in the gas.

While wire chamber technology is mature, being over 50 years old, it has many disadvantages; electron drift is inherently slow, limiting the size of the drift cell in high speed operation. These systems use gases, often explosive or flammable. Flowing these gases over a large system requires complex manifolds, endplate structures and safety systems. The use of high voltage requires a complex endplate design and electronic components to be placed within the active tracking volume. The thin sense wires are very fragile so that wire breakage can be a problem. A single wire breakage can cause an entire section of a chamber to fail because of the common high voltage line used for that section. A major construction problem is that a large chamber will not work unless its component parts lie absolutely along a straight line to within very high tolerances (~100μm), a difficult task for a large tracking system, ~ 4+ meters long.

None of these problems apply to a scintillating fiber tracking system. A scintillating fiber system is a totally passive system within the active tracking volume. Once built and installed, it should need no maintenance. There are no gases, no high voltages nor delicate parts to break. If a single fiber should "fail" for some reason, it will not affect any other fibers since each acts independently. The major problem with the use of scintillating fibers is the 3-dimensional nature of the construction problem that they present. This problem comes about because polystyrene or a mechanically similar material will be used as the base material for the fiber. Because of this material's plastic properties, the construction problem cannot be limited to 2-dimensions by the use of an endplate. The full 3-dimensional accuracy of the tracker must be addressed. Nonetheless, for physics reasons, similar measuring resolutions as obtained with the best wire chambers are desirable and obtainable with scintillating fibers. To achieve such accuracy, average fiber placement errors no greater than 25μm over a 3 dimensional

surface are required, using fibers ranging in diameters between 500μm - 1mm. One saving grace of the fibers is that one does not have to position the fiber along a straight line, making large scale structures easier to construct. It is the position of the fiber at any point that must be known to 25μm. This extra freedom allows many more design solutions. For example, fibers can twist and bend in 2 or 3 dimensions.

For the detection of charged particles the scintillating fibers will be formed onto cylinders as shown in Fig. 1, aligned along the magnetic field. Three orientations of the fibers will be used. The main orientation will lie parallel to the axis of the cylinder while 2 others known as stereo orientations will lie at plus and minus ~5 degrees with respect to the cylinder's axis. It would be advantageous to build up the cylinders using modules, but unless each sublayer of the cylinder can be built individually, the use of stereo layering calls for unimodular construction of a superlayer as depicted.

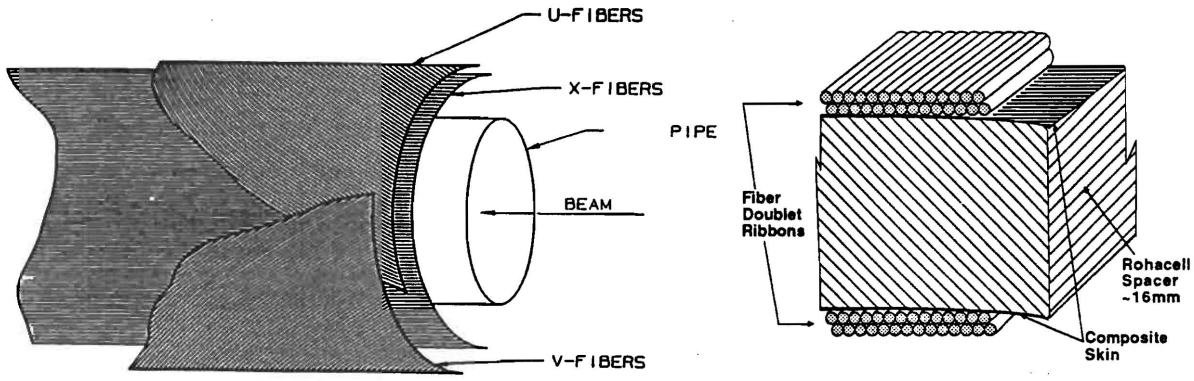

Fig. 1 a) A schematic showing the construction technique for the scintillating fiber tracker. b) The superlayer showing the mounting of fibers on the inner and outer surfaces of the support cylinder.

At present we have taken the approach that we must remove one degree of freedom at a time during the construction of the tracker. First the fibers' movements relative to one another will be removed by forming the fibers into ribbons. Fibers are now being manufactured to tolerances of 1% in their diameters. While this is excellent it will not allow the ribbons to be built up by simply placing the fibers one next to another. There must be a gap between fibers to allow for run out errors if high resolution measurements are to be made. A gap of 1.5% of the fiber's nominal diameter would be adequate, but it is more typical to use a larger gap of ~10% to allow for a strong glue-fiber bonding. Remarkably, this gap does not harm the resolution obtainable using a fiber ribbon, but in fact enhances the measuring resolution.

The ribbons will be placed accurately on a fiber-epoxy composite cylinder. The cylinder needs to have a high precision inner and outer radius. It is important that the layer to layer placement of the ribbons also be of high accuracy. For example it is possible to construct a sublayer consisting of 4 individual layers of fibers each staggered by 1/4 fiber diameter with respect to one another. The correlated layers have a measuring resolution which improves like the number of layers. This is much faster than by the square root of the number of measuring layers, the expected rate of improvement for uncorrelated layers. By using 4 correlated layers and their pattern of hits, a sublayer

made of 500μm fibers is capable of achieving < 40μm resolution, whereas we would expect only ~125μm otherwise.

4. SCINTILLATING FIBERS

A scintillating fiber consist of polystyrene core doped with the fluorescent dyes p-terphenyl (PTP) and 3-hydroxyflavone (3HF). This scintillator has fluorescence emission peaked at 530nm, has good fluorescence efficiency and radiation resistance characteristics, and, when clad with acrylic material (PMMA), can be drawn into fibers of small diameter (≤1mm) which exhibit long attenuation length (>4m). Fibers having the same base composition but no scintillation dyes exhibit attenuation lengths >9m, and are excellent waveguides to transmit the produced scintillation light to photodetectors situated outside the tracking volume. This composition has been selected for several reasons: first, general optical transmission is best in unirradiated polystyrene for wavelengths peaked in the visible portion of the spectrum 500nm < λ < 650nm, Fig. 2 and the effects of radiation damage on optical transmission in polystyrene are substantially reduced for wavelengths λ > 500nm, Fig. 3.

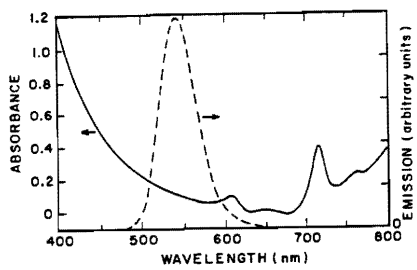

FIG. 2 Absorption in unirradiated polystyrene as a function of wavelength (solid curve) and fluorescence emission of the standard scintillation material, PS/PTP/3HF (dashed curve).

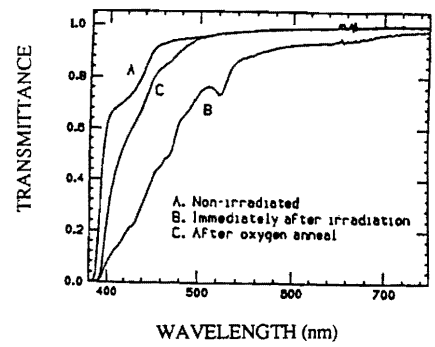

FIG. 3 Transmission in standard PS/PTP/3HF scintillator as a function of wavelength, before and after irradiation by ^{60}Co to 1 Mrad, and after annealing.

Multiclad or indexed fibers consisting of a standard fiber but with an additional outer cladding consisting of a ~25μm thick flouro-acrylic coating. This multiclad fiber has an increased light output ~1.7 times that of single clad fiber[2]. With this fiber, photo-electron yields at the end of 4.5 m of scintillating fiber and 8m of clear wave guide fiber readout by a VLPC have been measured to >5 for fibers with ~1mm diameter[3].

As an example of the robustness of such a system, for the fiber tracker proposed for SSC experiments, Fig. 4, tracking layers are positioned over the radial interval 0.65m-1.65m transverse to the beam. From the study by Groom, et al [4], and including an extra factor of 2 to account for the effects of neutrons, the expected radiation dose is ~20Krads/yr (at design luminosity) at the inner radius, and 3Krads/yr at the outer radius. The measured transmission through 10cm of the bulk scintillation material prior to and following a 1 Mrad exposure to a Cobalt 60 source which corresponds to 50 years at SSC design luminosity, indicates that irradiation in an inert nitrogen atmosphere followed by annealing in air produces no measurable optical attenuation at the wavelengths of interest (λ≥ 500nm). A similar result is obtained for polystyrene which is undoped with

scintillation dye. These results give confidence that optical transmission of an SDC fiber tracker will not be degraded over its working lifetime, 5-10 years, by radiation damage effects. Much work is underway in order to understand radiation damage effects in detail.

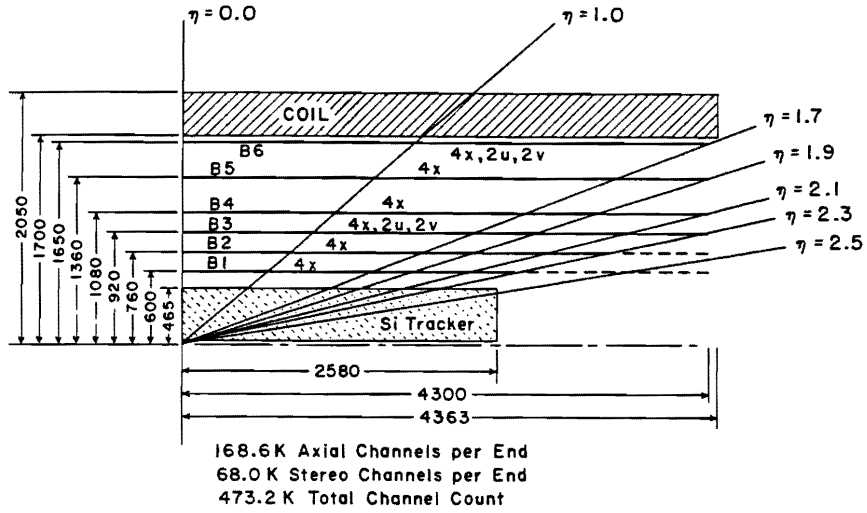

Fig. 4. Schenatic, 1/4 view of the SDC central tracker.

5. FIBER RIBBON CONSTRUCTION

5.1 Construction of a Fiber Ribbon

The small size, material composition, and delicacy of scintillating fibers pose a number of problems when one attempts to mount them precisely on a cylindrical surface. Some problems can be eliminated if fibers are collected into modular "ribbons" prior to mounting, but the ribbons must be robust, maintain internal fiber alignment, and allow successful tracker assembly. Both before and after mounting, a fiber's alignment should be verifiable.

In order to identify the parameters of good ribbon construction and develop a safe and viable measurement technique, we constructed a number of doublet ribbons and verified them under a Coordinate Measuring Machine (CMM) at FEPCO in Noblesville, Indiana. Our ribbon production facility became operational in May of 1992. Since that time, at least 79 doublet ribbons have been made, many containing 256 channels and some as long as 4.3 m. Ribbons are produced in a clean environment with humidity and temperature controls. The room lighting is filtered so that wavelengths below 560 nm are eliminated. This is necessary as some scintillation dyes are photo-sensitive and are damaged at wavelengths below this value.

The construction technique relies on a precisely machined jig plate, to which fibers are clamped while an adhesive is applied. 7075 aluminum is used for the jig plate, a hard alloy suited to precise machining. V-shaped grooves are cut along the length of the plate to align the fibers. To make a ribbon, fibers are first placed in the grooves to form the lower layer of a doublet. The upper layer is then added by placing fibers in the recesses between fibers in the lower layer. This insures a complete correlation between

the two layers. Foam-padded clamps that exert only a minimum of force are placed every two inches along the ribbon to hold the fibers in the jig.

The adhesive we use is a mixture of urethane (70%) and acrylic (30%) polymer suspensions. When dry, this mix maintains local rigidity while at the same time allows the ribbon to have a global flexibility. The adhesive is applied by painting it onto the top fiber layer between the clamps. Its consistency allows it to seep into the gaps between the fibers of the top layer and onto the fibers of the bottom layer. After this coat of adhesive dries, the clamps are removed and another coat is applied to the ribbon where the clamps were located. This leaves the ribbon with a "precision" side (the side adjacent to the jig) and a glued side (the top).

Using this technique, one person using one jig can produce a large doublet, 256 fibers by 4.5m, in approximately one day.

5.2 Technique of Locating Fibers by Coordinate Measuring Machine

To measure a fiber's location, within a ribbon, the CMM probe touches the fiber of interest 3~8 times across its exposed surface at a fixed position along its length. This is shown in Fig. 5. A circle is fit to the data resulting from these touches from which a center point and a diameter for the fiber are determined. This technique has been successful with an exposed fiber surface less than 500 μm wide. The pencil probe has a tip radius of ~100 μm. For better accuracy, the procedure is iterated by using the parameters determined from the previous step. To qualify an entire ribbon of 256 fibers, 8-10 fibers are sampled at ~9 locations along their lengths.

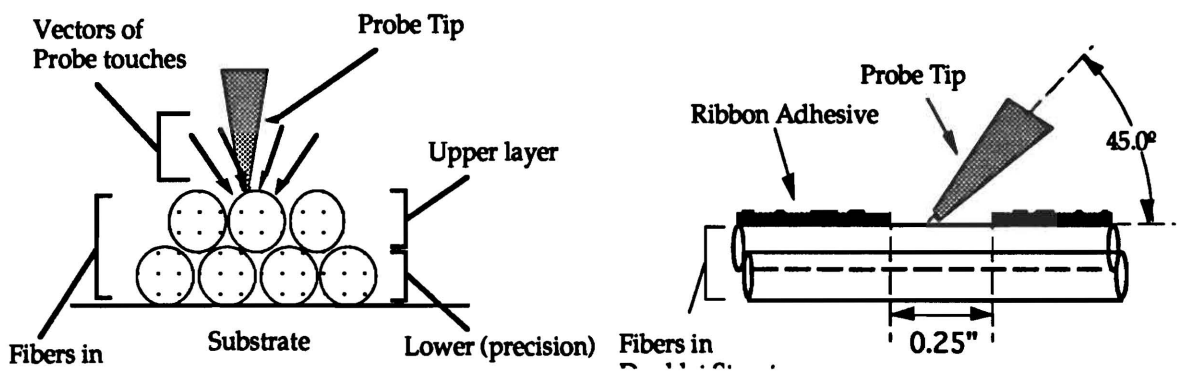

Figure 5: A) The CMM probe measures a representative fiber in a doublet ribbon by contacting it at several points along its exposed upper surface. B) The probe is canted at an angle to prevent cladding damage. Notice the unglued region where the upper layer is contacted.

5.3 Jig Plate and Ribbon Measurements.

To assure precise ribbon production the jig plate machining process was iterated by CMM feed back. The final measured standard deviation of the grooves in the ribbon production jig plates from relative parallelity was 6 μm. An absolute straightness of better than 10 μm has been achieved over the length of a 10 foot plate. These measurements are shown in Fig. 6.

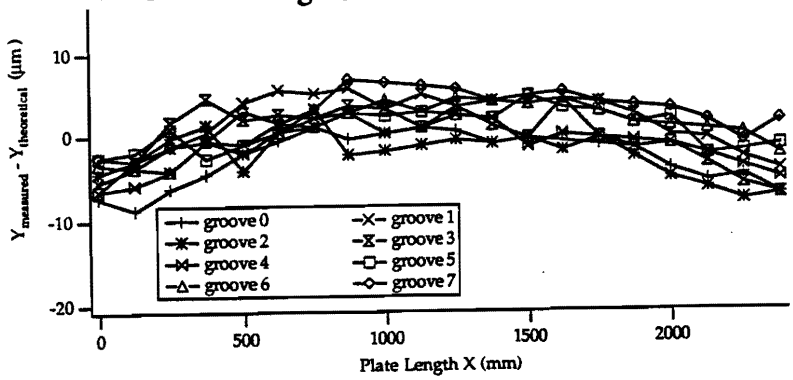

Figure 6: Deviation of grooves cut in a ribbon-making jig plate from absolute straightness as measured by CMM.

The repeatability with which a fiber's position within a doublet ribbon was determined to be < 2 μm and is shown in Fig. 7a. Fiber damage or "loosening" was not observed to be a problem. Special steps were taken during ribbon production to achieve this repeatability. Specifically, we left 1/4" gaps in the layer of adhesive applied to the top fiber layer in the doublet, Fig. 5b, so that the CMM probe contacted the fiber's surface rather than adhesive. Fig. 7b shows the distance measured between adjacent fiber centers, for ribbons manufactured on a jig plate of 850 μm groove spacing. The fiber-to-fiber distance was found to vary by only σ=20 μm for all fibers in a ribbon. This in agreement with the expectations caused by the variations in the fibers diameters.

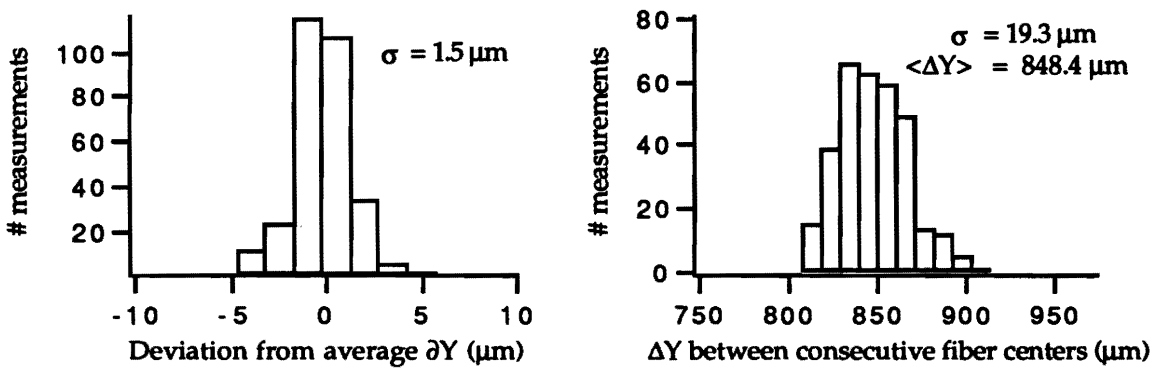

Figure 7 a) Deviations ∂Y from the average position along the width of a test ribbon. The position was measured for 10 fibers at 30 measurements per fiber. The repeatability is ~1.5 μm. b) Measured spacing ΔY between adjacent fiber centers in a test ribbon. The average spacing (848.4 μm) is slightly smaller than the theoretical value of 850 μm. The spacing is consistent to within 20 μm.

6. STABLE BASE CYLINDERS

The task of mechanically constructing a tracking detector based on scintillating fibers is somewhat more complicated than that of constructing a typical wire chamber. This is largely due to the fact that scintillating fibers formed from polystyrene cannot withstand significant stress. In the case of wire chambers, construction proceeds by specifying the locations of each of the wires' end points and then tensioning them to in order to decrease the non-linearity along the wire. This technique is largely a two dimensional problem. Scintillating fibers, on the other hand, must be guided to their location and fixed at all points along their length since stress is to be avoided. As a consequence, fiber mounting requires a fully 3-dimensional approach.

Collider experiments require cylindrical coordinate systems to achieve maximum acceptance and measuring accuracy. To match this requirement, a cylindrical support structure is the simplest means and the least massive way of providing a base for a fiber charged particle tracking system. Other possibilities, for example mounting ribbons to flat boards arranged in a cylindrical array, are simpler to manufacture, but they require a significantly more massive support structure in order to align the boards in a precise tracking array. A cylinder, because of its rotational symmetry, gives the best strength to mass ratio and comes closest to the ideal coordinate system desired in a colliding beam experiment..

Because of the flexibility of the ribbons, they will conform to the surface features of the support cylinder. The allowable local variations, δr, in the radius, r, of the cylinder at any point away from that of an ideal cylinder is set by the accuracy requirements of the momentum measurement. It is this requirement that sets the spatial resolution requirements on the coordinates measurements, given the charged particle tracking volume and magnetic field strength. This spatial resolution requirement generates a general relationship between the surface variations and the properties of the ribbon; N, the number of fibers in a single layer of a ribbon, Δ, the center to center spacing between fibers in the ribbon, and δd, the polar placement accuracy of the ribbon with respect to the axis of the cylinder, that is $r \cdot \delta\phi$, in cylindrical coordinates. This relationship can be written simply as,

$$\frac{\delta r}{r} = \frac{\delta d}{N \cdot \Delta} . \tag{1}$$

This relationship is plotted in Fig. 8 using the 850μm fiber spacing that has been used for prototype tests. From this relationship, cylinders with radial variations of δr ~100μm will yield coordinate structures that can be treated as a single measuring instrument without the need to separately calibrate sub-sections nor individual ribbons. Surface variations as small as ~100μm have a significant safety margin in allowable error to accommodate ribbons with widths of up to 200 fibers. If good ribbon placement can be achieved, ribbons >300 fibers wide can be utilized.

In order that the efforts of multiple scattering not disturb the momentum measurement, the material in the measuring system must be minimized. We also require minimum interaction length to limit the particle from being lost or accompanying particles showering and interfering with the measuring process. We have achieved both of these requirements with the production of a set of cylinders made at Hercules

Aerospace, of Salt Lake City, Utah. Two test cylinders were produced similar to those needed for the D-zero upgrade for the Fermilab Main Injector project. The cylinders have overall lengths of ~2m and diameters of ~0.5m. The cylinders were constructed using a phenolic honey-comb mesh core, 5/8 inches thick sandwiched between 10 mil-thick carbon fiber sheets. Each sheet was made up of four 2.5 mil prepreg sheets placed in a (0,90,+45,-45) orientation for maximum strength.

These cylinders achieved an effective mass of <0.5% of a radiation length for particles traveling transverse to the cylinders walls. The variations of the surface from ideal were found by making measurements in both the ϕ and z coordinate along both the inner and outer surfaces of the cylinder. From this data, the cylinder's axis and average radius were found. The difference between this "ideal" cylinder and the measured surface values were found to be for the inner surface a variance of ~80μm while the outer surface the variance is ~100μm. These results include the effects of gravity.

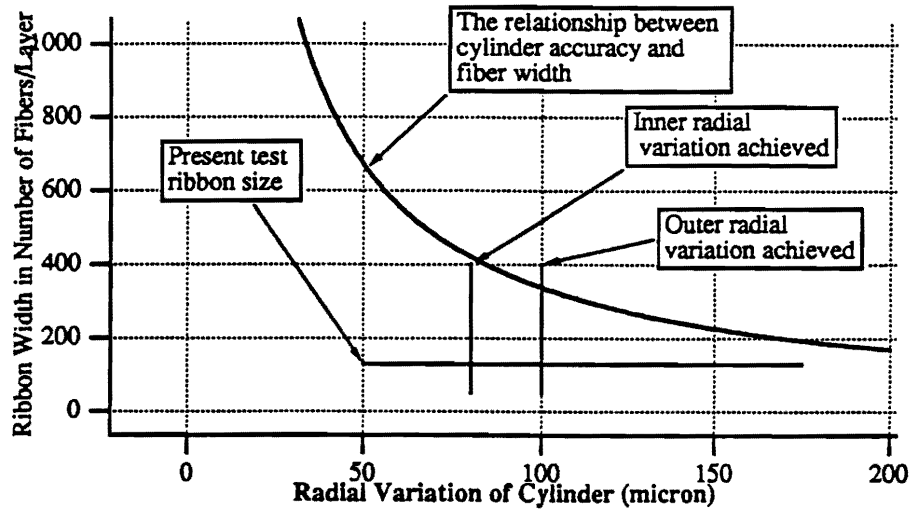

Figure 8. The relationship between the cylinder surface variations and fiber ribbon size.

7. PROTOTYPE FIBER MOUNTING TESTS

7.1 Goals for a fiber placement scheme

The construction goal is to place the doublet ribbons with an accuracy which will accommodate the requirements of track recognition at the trigger level, without the need for a calibration step. In order to achieve this we require that an axial mounting procedure meet the following criteria:

(1) Ribbons must be precisely aligned with the cylinder's axis (the total of all placement errors should be σ~50 μm or better along the ribbon length).

(2) Ribbons must be absolutely located with respect to one another and aligned parallel to each other at a repeatable, relative spacing around the cylinder axis, while maintaining the total of all placement errors to σ~50 μm or better along the ribbon length.

(3) There should be sufficient control over fiber placement so that we can stop and verify the mechanical alignment at any time during the process.

(4) Ribbons must be mounted in a way that avoids any and all fiber cladding damage or structural weakening. The ribbons must retain a consistent internal fiber alignment on the cylinder.

To achieve these goals, we envisioned a procedure using a "ribbon laying machine" that accurately maintained the relative alignment of ribbons to the cylinder axis. To simplify the mechanical design and operation of the machine the entire process is controlled by a large Coordinate Measuring Machine (CMM). The CMM's function is to provide continual feedback as to ribbon positioning and cylinder location during the each step of placing the ribbon onto the surface of the cylinder.

7.2 The Prototype Ribbon Laying Machine

We tested the procedure using a "Mark I" version ribbon laying machine constructed by Machine Kinetics in Oak Ridge, Tennessee. Purdue's Central Machine Shop contributed a number of modifications to the machine to improve its mechanical rigidity and performance as needed throughout the test. The essential features of the machine, shown in Fig. 9, are: (1) an aluminum jig plate for aligning ribbons to the cylinder, (2) a steel framework for rigid support of the cylinder and jig plate, (3) micrometer head adjustments and clamps for positioning the plate relative to the cylinder, and (4) a rotatable steel shaft to which the cylinder is mounted.

The jig plate for ribbon alignment was machined in a manner similar to that of jig plates used for ribbon production. We compensated for distortion of the plate due to stress on it when bolted to the machine by shimming the plate to a straightness of better than 20 μm.

7.3 Use of a Coordinate Measuring Machine for Alignment Control

It must be emphasized that the Coordinate Measuring Machine is not used merely for confirming a ribbon's position after it is mounted. The CMM controls the entire process by precisely determining the relative plate and cylinder positions at every step. This speeds up ribbon mounting and allows us to check and eliminate any uncertainty in the alignment. Simplicity is achieved because the software controlling the CMM does real time coordinate transformations so that we work completely in the reference frame of the cylinder.

To facilitate measuring the cylinder's position with the CMM, tooling balls were mounted on disks at the ends of the cylinder's shaft. Prior to any ribbon mounting, the entire surface of the cylinder was mapped by the CMM and referenced to these tooling balls. We defined the cylinder's axis and radius from a least squares fit of the surface map data. Since the tooling balls are fixed with respect to the cylinder, the cylinder's exact orientation at any time during the mounting procedure can be found by simply measuring the location of the tooling balls. The calculation of the cylinder's location is automatically performed by the on-line CMM software.

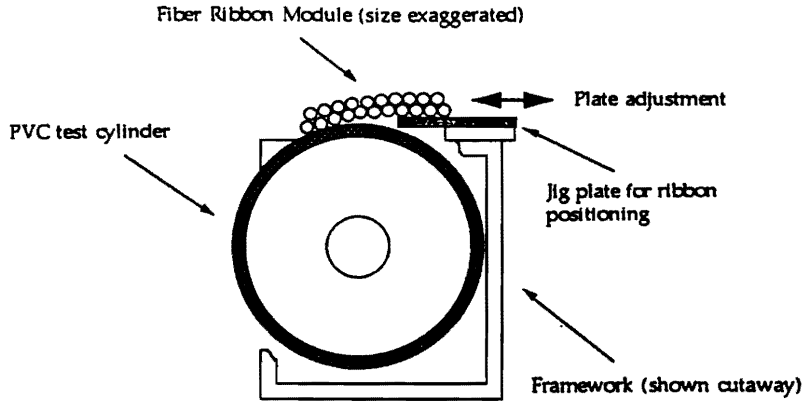

Figure 9: The essential features of the prototype ribbon laying machine include a PVC test cylinder and an aluminum jig plate supported by a rigid steel framework. The jig plate is positioned for ribbon mounting by adjusting its position along a horizontal linear track.

7.4 Verification of Axial Ribbon Alignment

Using the technique of CMM control of the mounting procedure, a total of ~10 axial and stereo ribbons have been mounted to date. The placement accuracy improved as each ribbon was mounted and as we iterated the technique. We have mounted ribbons to within ~25 μm of their target positions along their full length of ~2m. We have achieved relative alignment of one ribbon with respect to another of ~30 μm.

7.5 Doublet Resolution

The estimated doublet measuring resolution is then given by: $\sigma^2_{doublet} \approx \sigma^2_{geometry} + \sigma^2_{alignment}$

where $\sigma_{geometry} \approx \frac{\Delta}{2\sqrt{12}}$ is the limiting resolution of a tightly-spaced doublet ribbon geometry with fibers of a finite fiber diameter Δ, and $\sigma_{alignment}$ is the contribution due to the misalignment of placing the ribbon onto the surface of the cylinder. For the case of the prototype tests, Δ=830 μm which yields $\sigma_{geometry}$ ~125 μm. Having achieved values of $\sigma_{alignment}$ ~ 25μm without calibration of each ribbon location and values for $\sigma_{alignment}$ ~17μm with calibration, these results show that the placement error achieved has almost no effect on the resolution obtained with a fiber tracking system. We have achieved these results for both axial ribbons mounted parallel to the axis of the cylinder as well as for stereo mounted ribbons. We have achieved the same success for ribbons mounted on top of ribbons previously placed on the cylinder. Fig. 10 shows the results of stereo ribbons mounted on top of previously mounted ribbons.

By making direct CMM measurements of the absolute fiber positions for each of the ribbons as they are mounted on the cylinder, we have established a powerful means by which a fiber tracker can be calibrated prior to installing it. The number of calibration constants necessary is reduced to just two per ribbon. For example, we can calibrate each ribbon for an "offset" in its overall position in $r\delta\phi$, and for any "skew" (i.e. a slope) from

end to end with respect to the axial alignment. We found that these two corrections alone resulted in a calibrated value of $\sigma_{alignment}$<20 μm for test ribbons. This is sufficient to achieve $\sigma_{doublet} \approx \sigma_{geometry}$ for doublets with fibers of $D \geq 500$ μm.

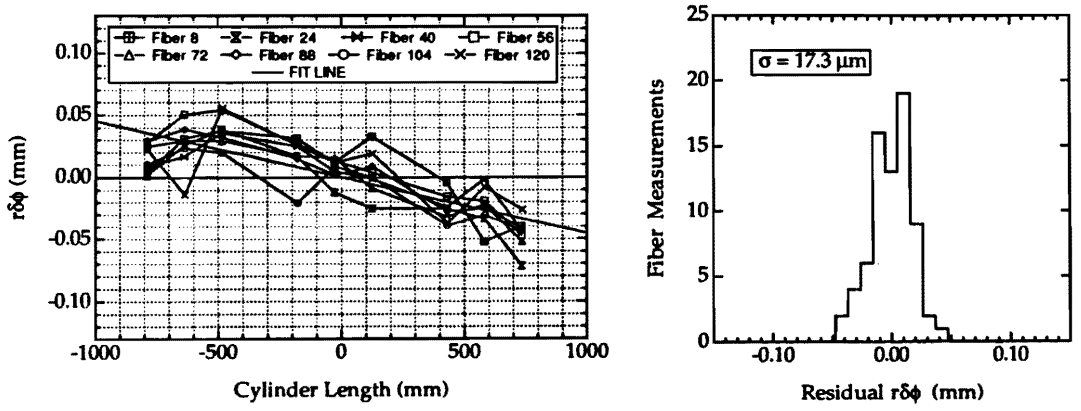

Figure 10 a) Measured deviation of the positions of fibers in a mounted ribbon with respect to the target position. The vertical scale has been exaggerated to indicate the magnitude of any misalignment. b) Measured deviation of fiber positions from parallelity with the cylinder axis for an axially mounted ribbon.

8. CONNECTORS

There are two discontinuities in the fiber tracking system that has been outlined. They occur at the scintillating fiber to wave guide fiber junction and the wave guide interface to the transducer system. It is possible to eliminate both of these. The system has been operated with one end of the wave guide fibers at 7°k, connected to the solid state photo-multipliers and the other end at room temperature connected to the scintillating fibers. However this approach causes any electronics problem to turn into the need to disconnect the entire wave guide. This in turn would require access to the active detector volume, a situation to be avoided at a hadron collider.

At the scintillating fiber to wave guide junction, fusion techniques have been developed that soften the fibers. Since the wave guide and scintillating fibers are identical except for the dopants, they readily form an excellent transmitting joint. The problem associated with this approach is that the scintillating fiber ribbons effectively have "hair". This "hair" can interfere with the precise placement of the ribbons onto the cylinder, the transportation and alignment of the cylinder and is in general difficult to manage.

In order to avoid these difficulties, the approach we have taken is to require two joints bridged by connectors. However, mass termination of scintillating fibers to wave guide fibers has not been achieved without a large and untenable cross-sectional area increase at the joint. The requirements for high spatial resolution require that the system work at the limits of the fibers light yield. Doing so calls for a connector with high, >90%, transmission across the joint. Therefore all connectors developed to date effectively treat each fiber individually in order to be assured of excellent transmission. A true mass termination approach is required.

Presently work is underway to achieve a one-to-one mapping connector that depends on the scintillating fiber and wave guide fiber having the same diameter

9. SOLID STATE PHOTOMULTIPIERS

The requirements of a photon transducer for a scintillating fiber tracking system operating at a hadron colliders must meet a number of requirements:

(1) The transducer must have high quantum efficiency for single photon detection. Quantum efficiency in the 530-550nm (yellow-green) wavelength region should exceed 50%. (2)The device must be low cost because of the large number of channels, 10^5-10^6, required. (3) The active element size must be compatible with an individual fiber diameter, ~1mm. The coupling should be low cost and mechanically robust. (4)The device should be insensitive to magnetic fields. (5) Fabricated devices should exhibit a high degree of homogeneity in response and reliability. (6) The device must be capable of operating at frequencies above 60MHz.

While there are a large number of devices capable of photon detection, only one device satisfies all the requirements. This is the solid state photomultiplier developed by Rockwell International Science Center. These devices are arsenic-doped silicon Impurity Band Conduction (IBC) devices and quantum efficiencies approaching 85% in the green have been measured. A program has been underway to optimize these devices for operation in the visible light region $\lambda < 1\mu m$ and such devices have been given the name Visible Light Photon Counters (VLPCs). Present devices have pulse rise times of <5nsec and, because the gain region is limited to ~10μm in diameter, a 1mm pixel sized device is capable of counting $>10^7$ photons/sec. Typical gain for a VLPC is $>10^4$. The only draw back to these device is that they must operate at cryogenic temperatures. While running electronic devices for a high energy physics experiment at cryogenic temperature is unusual, experience with these devices has shown that in small systems (~128 channels) stable operation is easily achievable, so that cryogenic operation is not a significant impediment to the practical use of the devices.

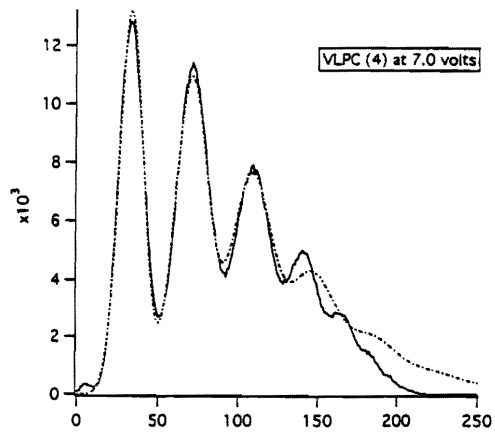

Figure 11. The pulse hieght spectrum taken using the new VLPCs from Rockwell. These device have quantum efficiencies ranging between 60%-70%. The pixel size is 1mm.

A run consisting of ~100,000 pixels with a number of perturbative variations in structure parameters and anti-reflective coatings was completed by Rockwell in February 1993. Careful analysis of these device variations are now underway. Fig. 11 shows response of a typical VLPC to a light source. The excellent gain dispersion of the device allows clear differentiation between events containing 1, 2, 3 and more photo-electrons. The absolute quantum efficiency of these devices range between 60-70%, adequate to serve as an excellent transducer for a fiber tracking system.

10. CRYOGENICS

To achieve practical application of scintillating fiber technology, it is essential to have an excellent cryogenic system. The success and efficiency of the system depends on the simplicity and robustness of the cryogenics. This system should have the following properties: (1) It should be compact implying a high density of VLPC and fiber channels. (2) It should be highly reliable and capable of continuous operation without intervention for up to 6 months. (3)It should have removable cassette or submodules so that repairs can be easily effected. (4)It should provide a stable operating temperature between $6^{o}k$ -$8^{o}k$ with a variation of $<0.2^{o}k$ away from the set temperature over the entire cryostat's working volume. (5)It should have a coast time of ~24 hours, to allow for electrical outages or other interferences with operations. (6)The helium should be recovered and the system should be safe to operate.

Fig. 12 shows examples of the cassette and overall system density that needs to be achieved for operation of a scintillating fiber tracking system. The high density is a requirement because of the great value of the limited space near the hadronic interaction region.

The present approach is to use a forced flow cryostat using super-critical Helium. Fig.13 shows a schematic of the system. The cryostat is extremely simple. It consists of 3 Helium intercept stations, two of which provide a large volume for the VLPC to sit in at constant temperature.

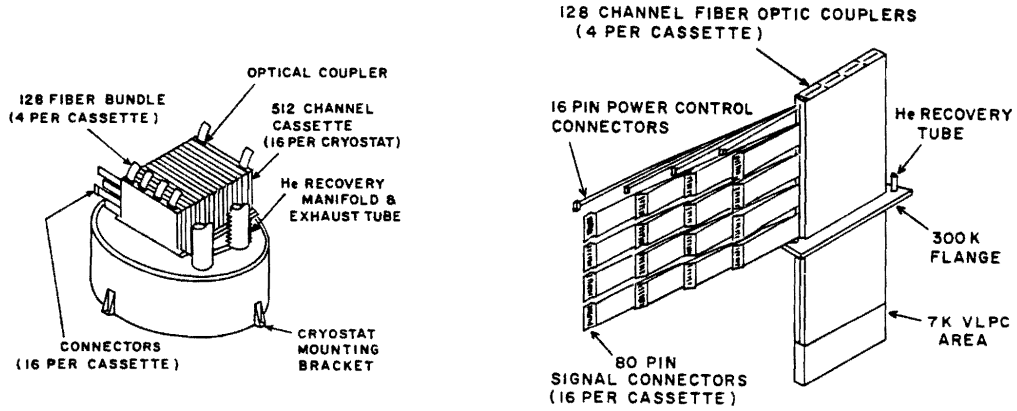

Figure 12. a) VLPC cryostat supporting 8,192 channels. b) VLPC Cassette supporting 512 channels.

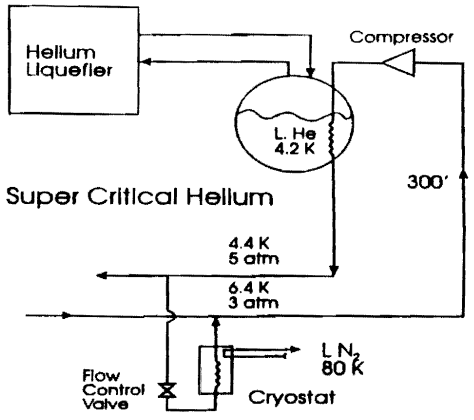

Figure 13. A high pressure helium system now being prototyped.

11. SYSTEM COST

Much effort has gone into the costing of the large scale scintillating fiber system for the SDC detector at the SSC. There are two components to that estimation. One is the cost of the engineering and design function, prototyping and capital investments that form the fixed cost to build such a system. The second is the cost of producing the system once these fixed cost items are in place. It is always difficult to specify a per channel cost for a system since the fixed costs are large and depend on the exact system under consideration. Also the capital investments required are always decreasing in cost as the technology becomes mature and more efficient approaches are discovered. With these provisos, the estimate for a $5 \cdot 10^5$ channel system for SDC was estimated at ~$80 per channel. Again, this includes everything , even the management costs of the construction.

12. REFERENCES

[1]. Conceptual Design: Scintillating Fiber Outer Tracking, January 1992, SDC note, Superconducting Super Collider Laborator, Dallas, Texas; B. Abbott, et al, "Test Beam Results using Scintillating Fibers Read out by a Multianode Phototube and Visible Light Photon Counters, Nuclear Instruments and Methods, July 1992; M.D. Petroff and M.G. Stapelbrock, IEEE Trans. on Nucl. Sci. NS36, 158 (1989); M.D. Petroff and M. Atac, IEEE Trans. on Nucl. Sci. NS36, 163 (1989).; Solenoidal Detector Collaboration, Technical Design Report, SSCL-SR-1215 (1992)

[2.] R. Ruchti, SPIE Proceedings Vol. 2007-09, July 1993

[3] E. Shibata, SPIE Proceedings Vol. 2007-08, July 1993; B. Abbott, et al., SDC-93-514 Superconducting Super Collider Laboratory, 1993.;R. Ruchti, SPIE Proceedings Vol. 2007-9

[4] D. Groom, editor "radiation Levels in the SSC Interation Regions",SSC Central Design Group Task Force Report, SSC-SR-1033 (June, 1988).