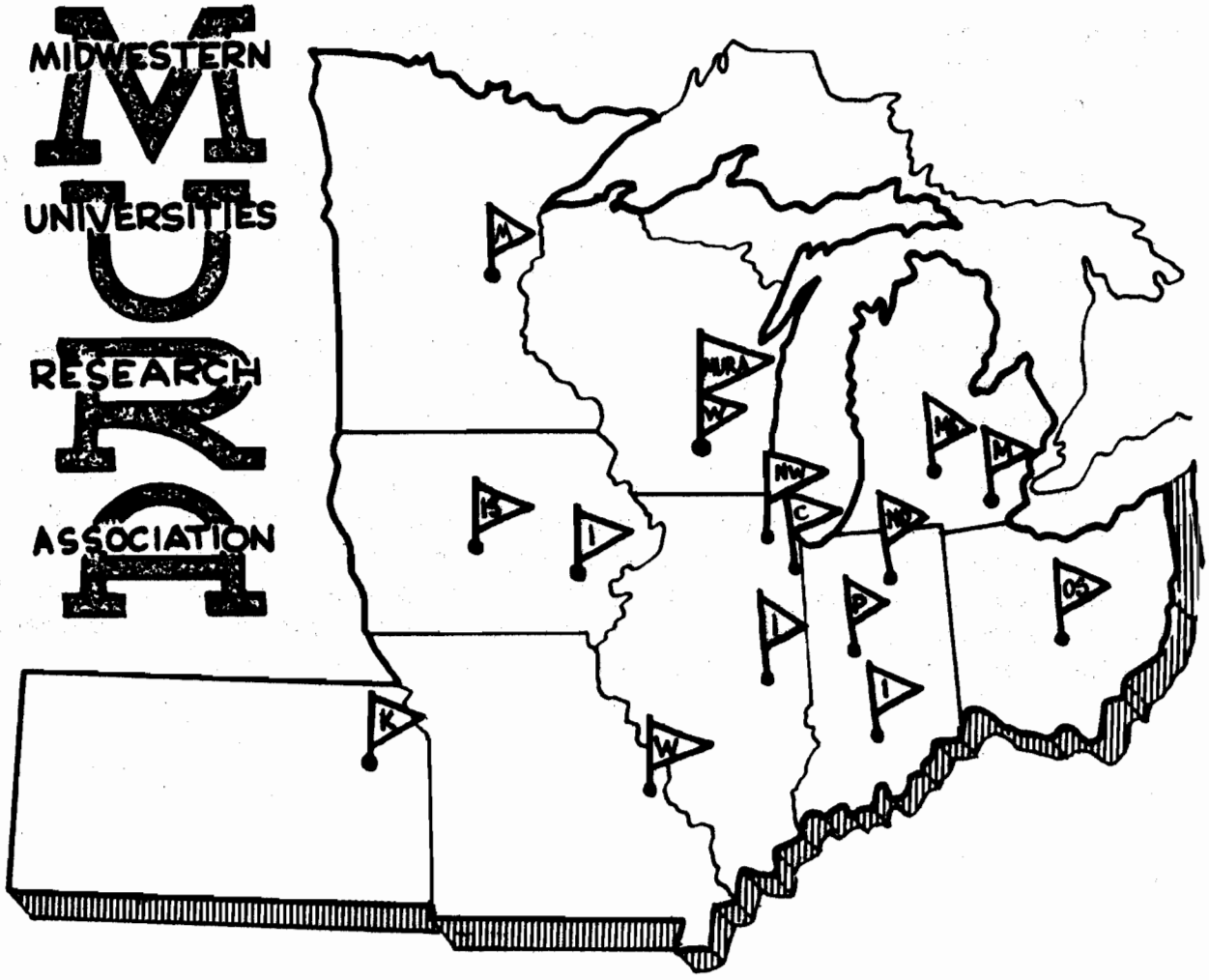

HIGH SPEED DIGITAL DYNAMIC FIELD MEASURING SYSTEM

G. E. Bush

REPORT **NUMBER** 716

LEGAL NOTICE

This report was prepared as an account of Government sponsored work. Neither the United States, nor the Commission, nor any person acting on behalf of the Commission:

A. Makes any warranty or representation, expressed or implied, with respect to the accuracy, completeness, or usefulness of the information contained in this report, or that the use of any information, apparatus, method, or process disclosed in this report may not infringe privately owned rights; or

B. Assumes any liabilities with respect to the use of, or for damages resulting from the use of any information, apparatus, method, or process disclosed in this report.

As used in the above, "person acting on behalf of the Commission" includes any employee or contractor of the Commission, or employee of such contractor, to the extent that such employee or contractor of the Commission, or employee of such contractor prepares, disseminates, or provides access to, any information pursuant to his employment or contract with the Commission, or his employment with such contractor.

Printed in USA. Price $0.50. Available from the

Office of Technical Services
U. S. Department of Commerce
Washington 25, D. C.

MURA-716
UC-28: Particle Accelerators and
High-Voltage Machines
TID-4500 (43rd Edition)

MIDWESTERN UNIVERSITIES RESEARCH ASSOCIATION*
P. O. Box 6, Stoughton, Wisconsin

HIGH SPEED DIGITAL DYNAMIC FIELD MEASURING SYSTEM

G. E. Bush

August 31, 1965

ABSTRACT

A facility for measuring high gradient time variant magnetic fields has been developed. The system consists of pickup coils, integrators, a multiplexer, one analog-to-digital converter, and an IBM 1401 computer. There are nine precision-wound dipole pickup coils that are placed in the unknown field. The induced coil voltages are fed into nine precision integrating amplifiers whose outputs are proportional to the ΔB that is seen by the nine coils. These outputs plus the signal from a current shunt placed in the magnet excitation line are then sequentially scanned by a ten-channel multiplexer. The multiplexer feeds a high speed analog-to-digital converter which feeds the computer through a parallel to serial converter. This measuring system was designed to be fast enough so that interpolation to any point in time is possible. The coils were designed to be insensitive to the second and third spatial field harmonics and thereby effectively measure fields at a point instead of over the whole coil area. The direct link to the computer is a two-way tie, with data flowing to the computer and control signals flowing to the measuring system.

*AEC Research and Development Report. Supported by the U. S. Atomic Energy Commission through ANL by Subcontract 31-109-38-1707.

INTRODUCTION

The MURA study of time-independent magnetic fields has recently been expanded to include the time variant fields characteristic of large AG accelerators. The experimental phase of this investigation required the development of a high speed dynamic field measuring system. The system must measure fields at discrete points in space and time and digitize these measurements in order to utilize existing MURA orbit study computer programs such as Datam[1] and Parmesh.[2]

A careful analysis of existing "state-of-the-art" commercial components was made in order to minimize system design time and cost. From this study design parameters were chosen as the best over-all compromise between speed, accuracy, cost, and complexity.

SYSTEM DESIGN GOALS

Magnetic Field Requirements

A peak field measuring capability of 20 kG was chosen since this value represents approximately the upper limit of median plane fields in accelerator magnets. The accuracy specification depends strongly on the minimum measured field value, because at low fields additional sources of measuring error become significant. Some of these sources include amplifier and integrator drift rates, quantizing errors, offsets, thermal emf's, hum and noise. For this reason the minimum field specification (the field at which a certain over-all accuracy must be met) was set at 160 gauss, which corresponds to a typical accelerator injection field. Of course, much smaller fields than this can be measured with the instrument (i.e., for examining fringe fields), but with an attendant decrease in accuracy. Because of the problems associated with data storage (memory

capacity) and information flow speeds, an initial data acquisition interval of one second was selected. Most time variant fields of interest have an accelerating ramp of this time length or shorter. For any magnetic structures utilizing a longer ramp, one second measuring intervals can be staggered over various parts of the ramp on subsequent magnet pulses to obtain the whole time field plot.

It can be assumed that any reasonable magnet structure to be investigated will have a long time constant associated with it, and so a design rate of 20 kG/sec was used to define the bandwidth of the system amplifiers and integrators.

Magnetic Field Sensing

Many magnetic field measuring devices are unsuitable for the measurement of high gradient dynamic fields. Proton and electron resonance methods function only in quite uniform fields . Peaking strips require an opposing field which distorts a nonuniform field. Flux gate or third harmonic detection methods are generally applicable only to small fields. To follow the rapidly changing field rotating coil gauss meters of the Rawson type would have to rotate too fast for acceptable brush life. Flip and vibrating coils would be difficult mechanically to operate. Hall effect and magnetoresistive devices have good sensitivities only for relatively large areas. The measurement of an inhomogeneous field to reasonable accuracy requires a detector of very small area, with low sensitivity.

The method of integrating the induced voltage from a stationary coil mounted in a dynamic field was finally chosen. The integrated induced voltage is proportional to ΔB at the coil, during the integration time interval. There are two main advantages that make this scheme attractive: (1) integrators for one second time intervals and signal levels attainable with a coil are available

with an accuracy of 0.01%,* and (2) there exist certain coil configurations that enable one to measure fields at a point and not over the average coil area. A coil of this type is shown in Fig. 1.

MURA has had considerable success in fixed field measurements with this type of rotating coil and ac digital voltmeters.[3] The coils were designed according to Laslett's[4] formulas which render the coil response essentially insensitive to all derivatives of the field. The dimensions and equations relating coil parameters are shown in Fig. 2.

Speed

The system speed specification is determined by the requirement that the time quantization error be commensurate with the other sources of error. This requirement automatically allows interpolation to any point in time without excessive error build-up. For example, given a peak field of 20 kG, any sort of well behaved time ramp, and measuring duration of approximately 1 second, a measuring rate of 1000 readings/sec (1 krs) will allow the field to change only 20 gauss between readings. This means that one can interpolate between readings to an accuracy of better than 10 gauss, or to an accuracy of 0.05% at a reading rate of 1 krs.

A secondary consideration is the total time required to secure a complete field map. A rate of 1 krs will enable one to completely measure a field point in each magnet cycle. When considering large experimental magnet structures, one field point every 3 or 4 seconds (one magnet cycle) accumulates data very

---

*All values that are expressed as percents will be percents of full scale, unless otherwise defined.

slowly. Most analog-to-digital converters (ADC's) are capable of rates of 10 krs which means our measuring rate is using only one-tenth the speed capacity of the digitizer. An obvious way to increase the overall measuring system speed by a factor of 10 would be to have ten field pickups time sharing the ADC instead of only one. Ten channel multiplexers with sequencing rates of 10 krs also are standard items. Any further increase of system speed at the present time would require special nonstandard equipment. For this reason a system rate of 10 krs was chosen. Since the magnet excitation current is also important, it was decided to use one channel to monitor the current and have nine field transducer channels.

Accuracy

The speed which gives adequate time resolution dictates the accuracy to which the system can be designed. MURA has been using five-digit precision voltmeters to measure time-invariant fields for three years, but most five-digit voltmeters are too slow in digitizing by a factor of at least 100. Using faster four-digit ADC's limits the accuracy obtainable from the system.

Four-digit resolution gives a quantizing error of 1/2 digit or 0.005%. Converters of this type are available with accuracies (excluding quantizing error) of 0.01%. Multiplexer linearity adds another 0.005% error. Integrator accuracy is 0.01%, which includes gain stability, linearity and drift. Thus we have a maximum of about three bits in the least significant digit of uncompensable error. This three-bit error is reasonably independent of signal amplitude because the effects that contribute errors proportional to signal amplitude are effective at high levels, and effects that contribute errors independent of signal amplitude (drift, noise, offset, etc.) are effective at low signal levels. In summing these sources, the error expressed as bits of uncertainty is relatively

constant over the whole range. These three bits of uncertainty act like a quantizing (resolution) error--the reading error increases with decreasing field. One way to alleviate this problem is to use many scales (or scale factors, i.e., preceding switchable amplifiers or attenuators) to keep the converter decades full, or work as near as possible to full scale. The limiting factor here is amplifier drift on low ranges. This soon offsets any advantages of the added resolution obtained by using more gain. The normal practice is to put scales in the ratios of 10:1 between ranges and use the scale selector to set the decimal point. With such a scheme, our range of expected field values could have been covered in two ranges, but the 1/10 of full scale switchover point reading error would be 0.3% at 2 kG and the low field reading error would then be 0.38% at 160 gauss.

With three ranges to cover the whole range of expected field values, the switchover point can be picked at 1/5 of full scale or 4 kG thereby cutting the switchover point error in half. Unfortunately, in the third or added range another three digits of amplifier drift must be added in making the lowest range full scale reading error 0.06%, and the 160 gauss reading error now is only 0.3%. The third range does not improve the low level accuracy appreciably but reduces the mid-level error by a factor of two. This can be seen more clearly by referring to Fig. 3.

A guaranteed system accuracy specification of 0.38% (excluding transducers) was the best that was returned from the various manufacturers queried. An examination of Fig. 4 will show that over 90% of field values (randomly distributed in magnitude) read will have an accuracy exceeding ten times the stated accuracy, or about 0.03%.

Data Handling and Storage

An IBM 1401 computer was programmed to store and handle the large quantities of data coming from the converter. Since this small computer was already modified to communicate directly with other equipment, only a data interface was necessary to transfer data from the measuring system to the computer. Such an interface is much cheaper than a complete magnetic tape system. This 1401 input-output option had been previously installed to drive an incremental 30-in. plotter. Using this option operational flexibility was gained, because now the measuring system could use the computer core memory as a large buffer to temporarily store measurement data. Also the logical benefits of software control of the data system could be realized, eliminating the need for complex control logic hardware. Final storage of the data is on magnetic tape through one of the 1401-associated tape units.

Data Transfer Interface

For a more detailed look at the various aspects of data transfer, let us consider some of the interface components:

Parallel to Serial Converter. The main functions of the interface were the conversion of the parallel ADC data to the serial character-by-character form required by the 1401 computer and the logic and timing necessary to transfer the data.

Code Converter. The data system uses an internal code different from the 1401 code, so another function of the interface was to convert from the internal 1242 code to the computer 1248 code.

System Clock. Since all readings are dependent on time, another function of the interface was to relate all measurements to a precise time base. This

time base, or clock rate, was set at 10 kc for 10-channel operation with a switchable optional rate of 1 kc for use with one channel only. The system clock is generated by a 1 Mc crystal oscillator, accurate to 0.001%, that is divided by 100. The high order of timing accuracy assures a timing error of less than the quantizing error over a one-second interval.

Timing Pulses. Four timing pulses are generated by a shift register that successively gates the four digits into the computer. The shift register is advanced by the computer after each digit is successfully received. It takes four cycles of about 20 microseconds each to transfer one ADC conversion. Besides the ADC reading, it was also necessary to transfer channel number, selected scale, sign and overrange information, but because of the restriction to 100 microseconds total cycle time (10 kc rate), this auxiliary information is transferred into the machine as "overpunches" on the A and B lines used for alphabetical information. Figure 5 indicates the format of this information.

System Control. The system as a whole has three separate computer selected operating states. Computer control was chosen to allow maximum operating flexibility. The states are stop, start, and run. The stop state consists of no data transfer, integrators clamped, multiplexer clamped on the shunt channel and no conversions. In the start mode the ADC starts converting at the system clock rate and the multiplexer is still locked at the shunt channel. In this mode the shunt voltage is repetitively "read" by the computer until it exceeds some preprogrammed value which indicates that a magnet cycle has started.

The computer then switches the measuring system to the "run" mode which unclamps the integrators and allows the multiplexer to sequentially scan the integrators and the shunt channel.

This data transfer continues until a preset amount of the computer memory is filled. Then the computer terminates the transfer and logically disconnects the measuring system. Upon sensing this disconnection, the measuring system switches back to the stop mode.

Programming. In the discussion of system control the programming aspects were briefly referred to. In this section they will be covered in more detail.

The computer can check the measuring system to see if it is ready (connected, turned on, positioned, etc.). This feature was added so that if the system were not ready, then the computer could do other jobs. If ready, the computer calls for one reading. This call changes the measuring system from the stop to the start mode and the shunt voltage is read. The computer then compares this with a prestored value , and if the shunt voltage is greater, then the computer switches the measuring system to the run mode and calls for more data. This time the measuring system is in the run mode, so the coils and the shunt are sequentially scanned. This data comes in "continuously" at a 10 krs rate while the computer clock is effectively turned off. In a sense, during this transfer, the computer timing is slaved to the measuring system timing. This feature led to much simplification in the synchronizing circuits.

This data transfer continues until a special character (group mark, word mark) is sensed from memory, which turns the computer clock back on and terminates the "read" instruction. The program next transfers the data to magnetic tape, and makes a quick check to see if any values were overrange. If they were, the program takes appropriate action (backspace tape, error printout, etc.). The program then loops back to the read shunt instruction after the operator signals

that the coils have been moved to a new position in the magnet. These programming steps are shown symbolically in Fig. 6.

Controlling the measuring system by computer results in high operational flexibility, which provides the following interesting modes of operation: immediate print out, immediate plotting, initial data reduction, printing and plotting, and sophisticated automatic system checkout and calibration. The overall measuring system logical control and data flow paths are shown on the system block diagram, Fig. 7.

CONCLUSION

This system was designed to extend the MURA experimental magnet program and as a result a very general system evolved with broad capabilities; a system of this complexity or speed would probably not be required for the final magnetic field map of a large future accelerator. The use of the system in the initial magnetic investigations, however, should lead to simplifcation of the system needed to install and align the magnets of a large accelerator. This system should make a serious contribution to the question of what magnet tolerances are realistic, and as such, this system represents what is capable in accuracy and speed with off-the-shelf electronic components today. A subcontractor, Adage Corporation, is presently installing and checking the system; the actual system accuracy will be the subject of a future report.

ACKNOWLEDGEMENTS

The author is most grateful to John Hicks of MURA who carefully checked the integrator specifications and designed the search coils, to Roswell Brown also of MURA who precision hand wound the coils, and to John Holman of Adage Corporation who designed the computer-measuring system interface.

REFERENCES

1. C. H. Pruett, R. S. Christian, G. del Castillo, R. O. Haxby, J. R. Mulady, R. A. Otte, G. Parzen, W. A. Wallenmeyer, and D. E. Young, Rev. Sci. Instr. 35, 1435 (1964).
2. J. Anderson and G. Parzen, "The Parmesh Dynamics Program-III", MURA-635 (unpublished).
3. J. R. Mulady, G. E. Bush, R. O. Haxby, C. H. Pruett, and W. A. Wallenmeyer, Rev. Sci. Instr. 35, 1437 (1964).
4. L. J. Laslett, "Some Aspects of Search Coil Design," Brookhaven National Laboratory, LJL-1 (July 5, 1954, unpublished). See also, M. W. Garrett, Appl. Phys. 22, No. 9, 1091-1107 (1951).

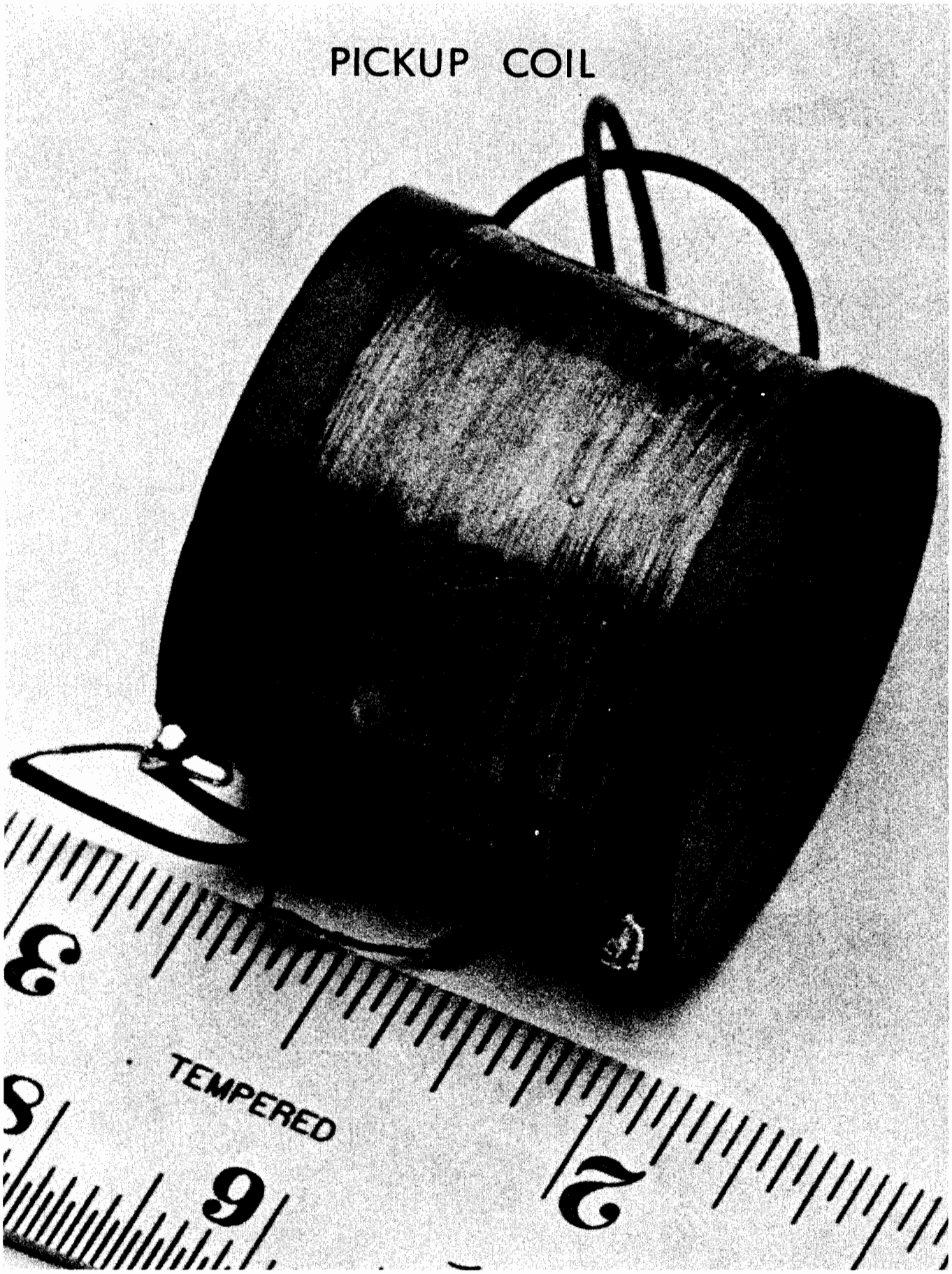

Fig. 1

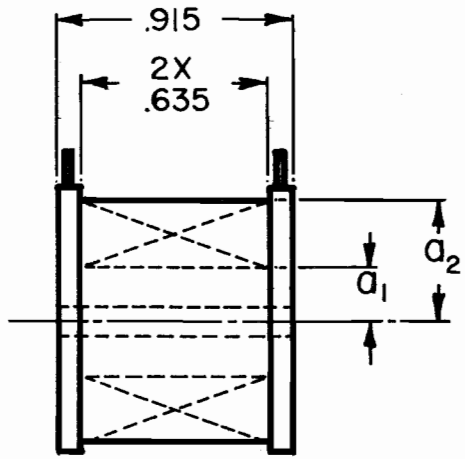

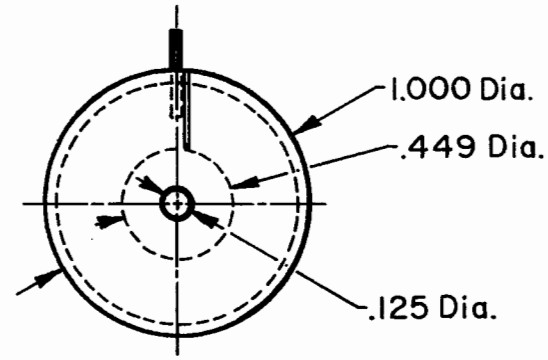

Response To $\frac{d^3v}{dx^3}$ Vanishes

If $X^2 = \frac{9}{20} \frac{a_2^5 - a_1^5}{a_2^3 - a_1^3}$

For $a_1 = .2245$

$a_2 = .4490$

Then $X = .3175$

The Other Coil Parameters Are; —

5511 Turns Of # 36 Bondeze # 1 Wire

456 Ohms Resistance

Q Of 4.15

299 mh Inductance

23.739 Volts/Kg Sensitivity @ 2100 rpm Or
.1528 Volt Second / Kilogauss

Coil Form — Boron Nitride

PICKUP COIL DESIGN AND PARAMETERS

Fig. 2

HIGH SPEED DIGITAL DYNAMIC FIELD MEASURING SYSTEM

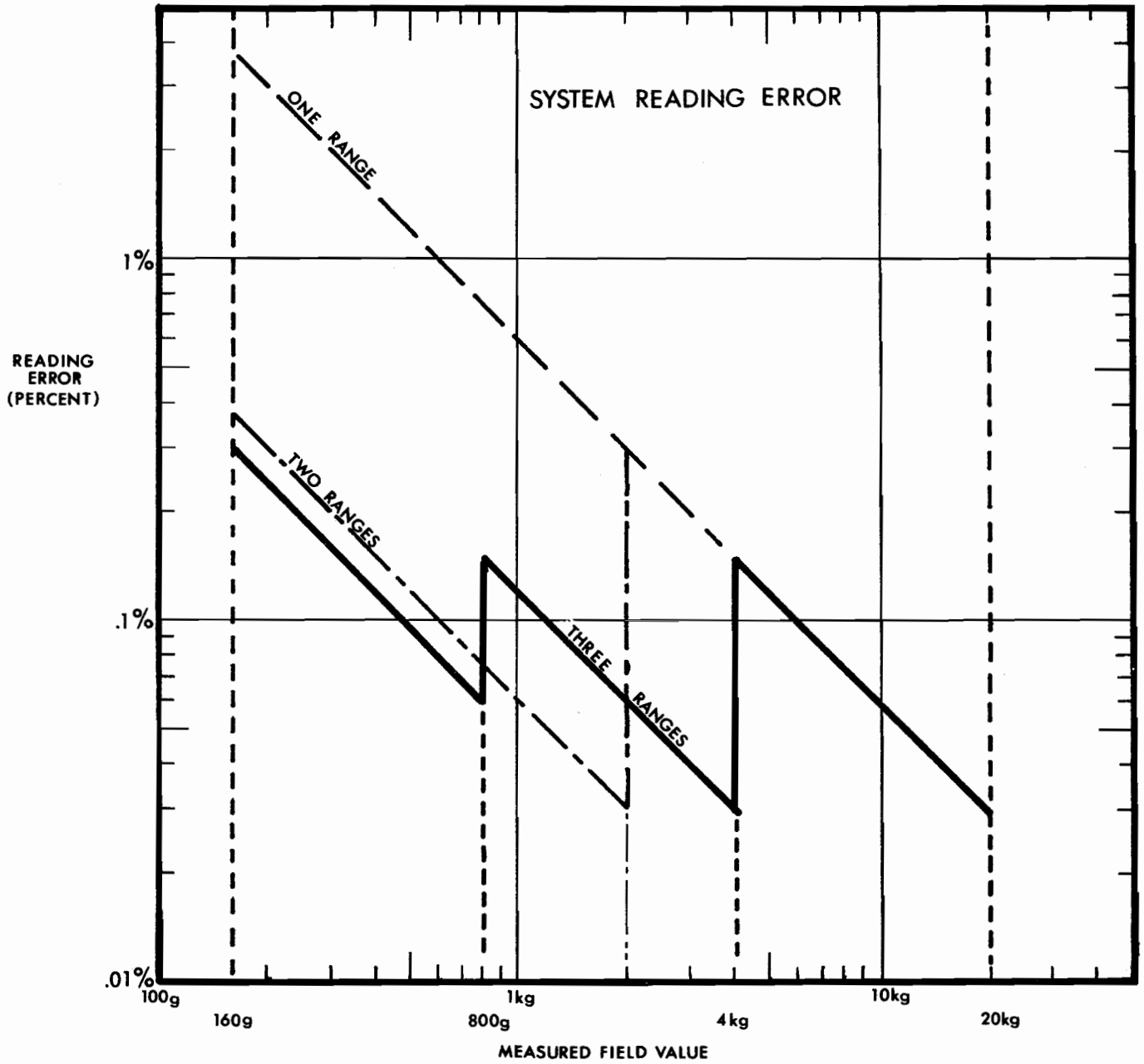

Fig. 3

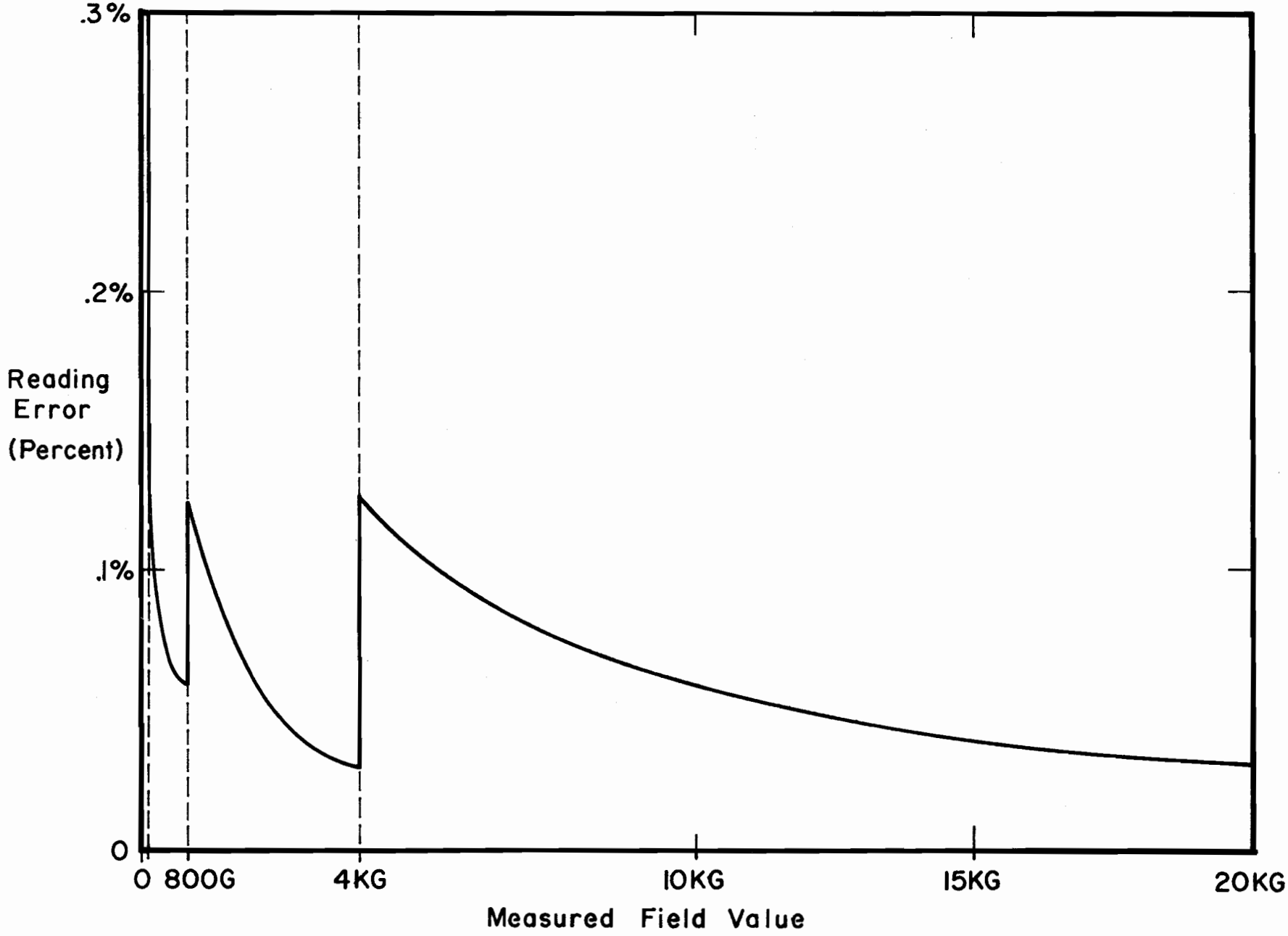

SYSTEM READING ERROR
(Linear Plot)

Fig. 4

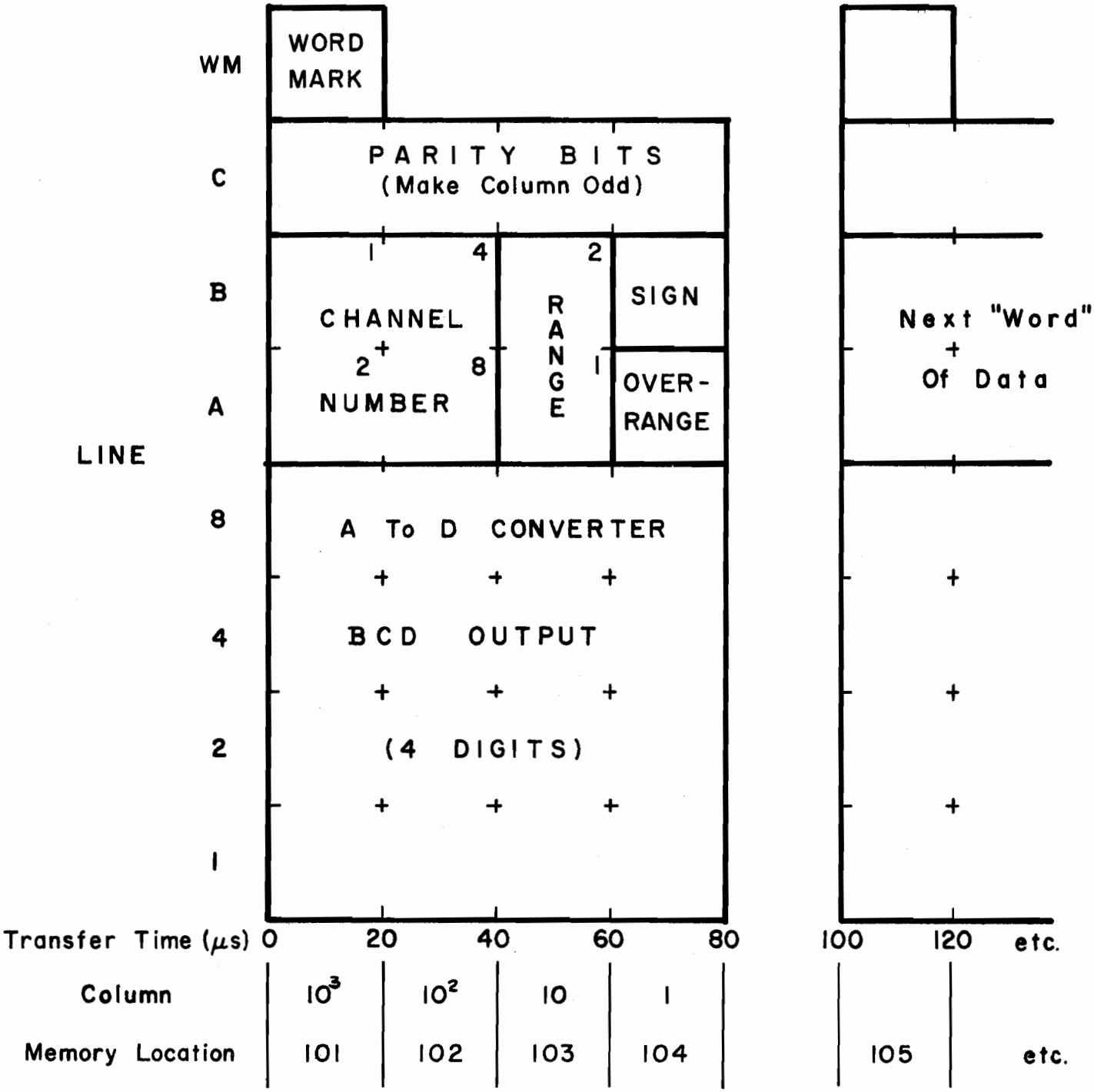

FORMAT OF DATA

(ON TRANSFER LINES)

Fig. 5

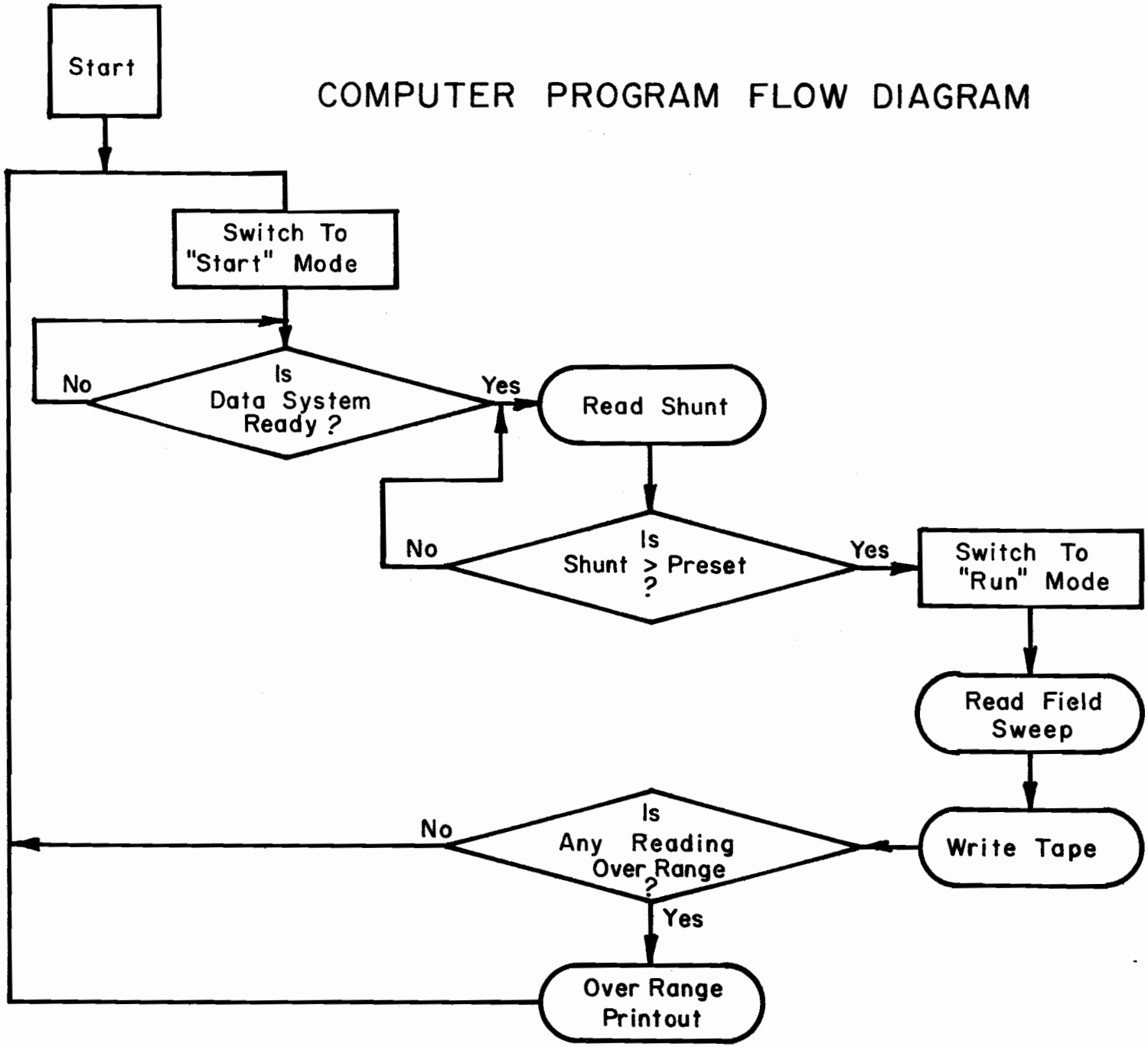
COMPUTER PROGRAM FLOW DIAGRAM
Start
Switch To "Start" Mode
Is Data System Ready ?
No
Yes
Read Shunt
Is Shunt > Preset ?
No
Yes
Switch To "Run" Mode
Read Field Sweep
Write Tape
Is Any Reading Over Range ?
No
Yes
Over Range Printout

Fig. 6

HIGH SPEED DIGITAL DYNAMIC FIELD MEASURING SYSTEM

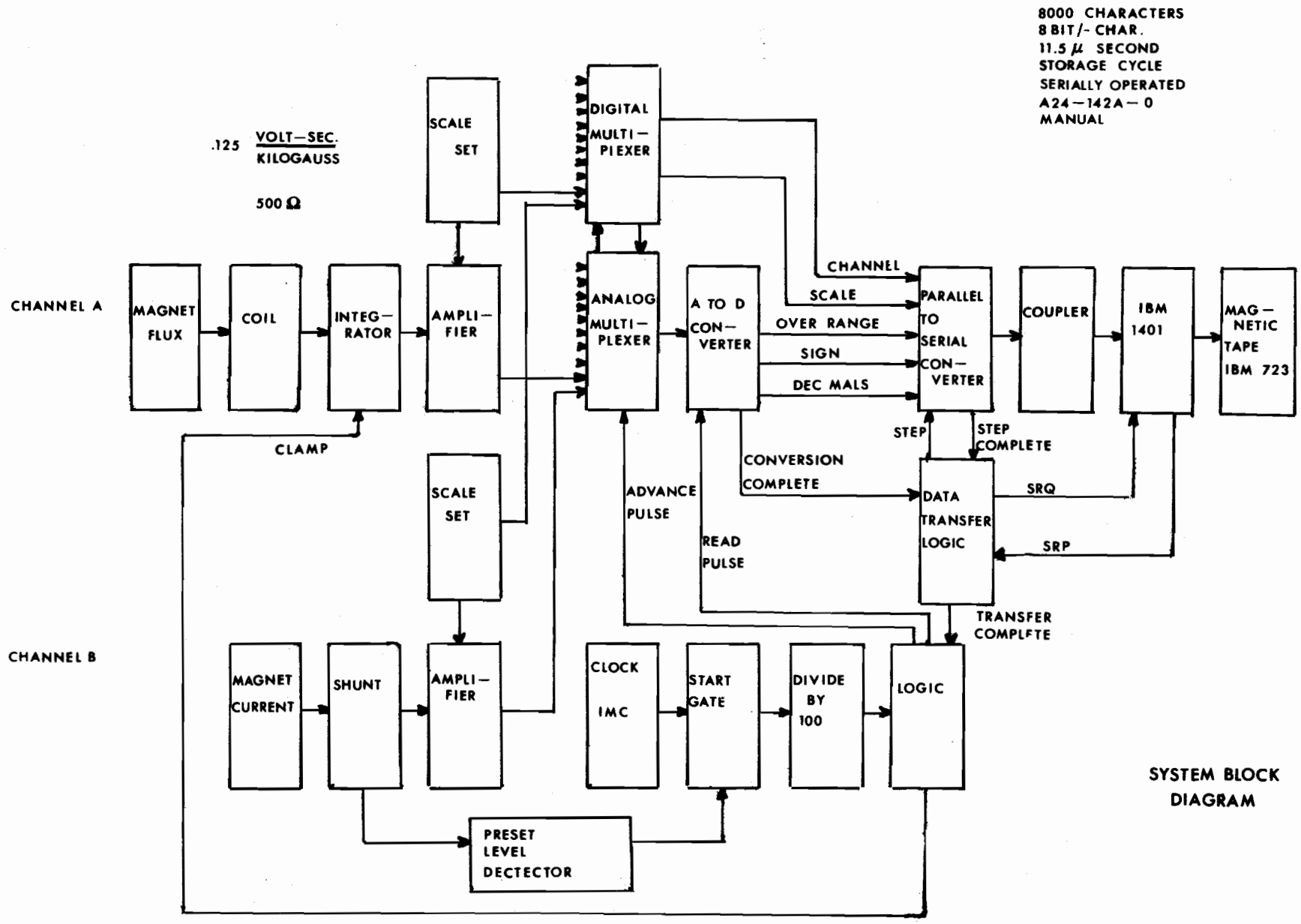

SYSTEM BLOCK DIAGRAM

Fig. 7