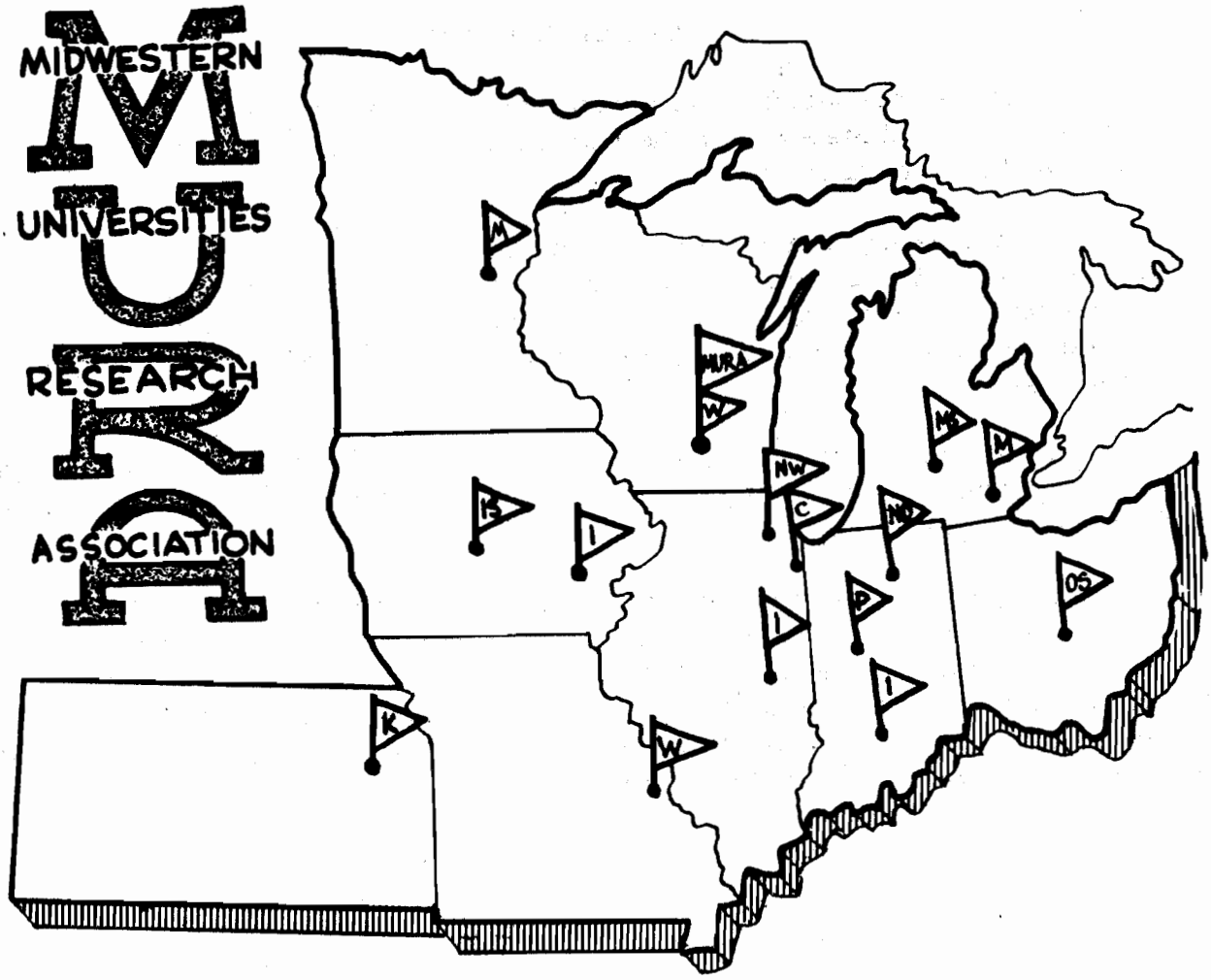

MAGNETIC FIELD CALCULATIONS SUITABLE FOR A HEAVY LIQUID BUBBLE CHAMBER MAGNET

F. J. Kriegler and S. C. Snowdon

REPORT **NUMBER** 708

LEGAL NOTICE

This report was prepared as an account of Government sponsored work. Neither the United States, nor the Commission, nor any person acting on behalf of the Commission:

A. Makes any warranty or representation, expressed or implied, with respect to the accuracy, completeness, or usefulness of the information contained in this report, or that the use of any information, apparatus, method, or process disclosed in this report may not infringe privately owned rights; or

B. Assumes any liabilities with respect to the use of, or for damages resulting from the use of any information, apparatus, method, or process disclosed in this report.

As used in the above, "person acting on behalf of the Commission" includes any employee or contractor of the Commission, or employee of such contractor, to the extent that such employee or contractor of the Commission, or employee of such contractor prepares, disseminates, or provides access to, any information pursuant to his employment or contract with the Commission, or his employment with such contractor.

Printed in USA. Price $0.50. Available from the

Office of Technical Services
U. S. Department of Commerce
Washington 25, D. C.

MURA-708
UC-28: Particle Accelerators and
High-Voltage Machines
TID-4500 (37th Edition)

MIDWESTERN UNIVERSITIES RESEARCH ASSOCIATION*

P. O. Box 6, Stoughton, Wisconsin

MAGNETIC FIELD CALCULATIONS SUITABLE FOR A HEAVY LIQUID BUBBLE CHAMBER MAGNET

F. J. Kriegler and S. C. Snowdon

February 23, 1965

ABSTRACT

A simplified method of calculating two-dimensional magnetic fields including the effects of finite permeability in the iron is presented. The geometry chosen is that of an H magnet and is suitable for considerations of magnetic fields desired in connection with heavy liquid bubble chambers.

*AEC Research and Development Report. Supported by the U. S. Atomic Energy Commission through ANL by Subcontract 31-109-38-1707.

INTRODUCTION

The assumption of infinite permeability for iron in magnetostatic calculations generally yields a good approximation to the field distribution expected from actual iron. The largest discrepancy comes in predicting the required excitation. The method to be described utilizes notions inherent in a magnetic circuit to handle the flux flow in the iron.[1] Any flux, however, that enters the iron from regions other than the pole tips is also inserted. Thus, the magnetic circuit assumption reduces a two-dimensional calculation in the iron to an equivalent one-dimensional calculation. This use of a magnetic circuit not only gives a better estimate of the magnet excitation but, since the magnetostatic potential on the surface of the iron can be determined from the flux, these boundary potentials can be utilized to increase the accuracy of the field distribution in the air.

BOUNDARY VALUE PROBLEM

A quarter section cross section of the magnet structure to be considered is shown in Fig. 1.

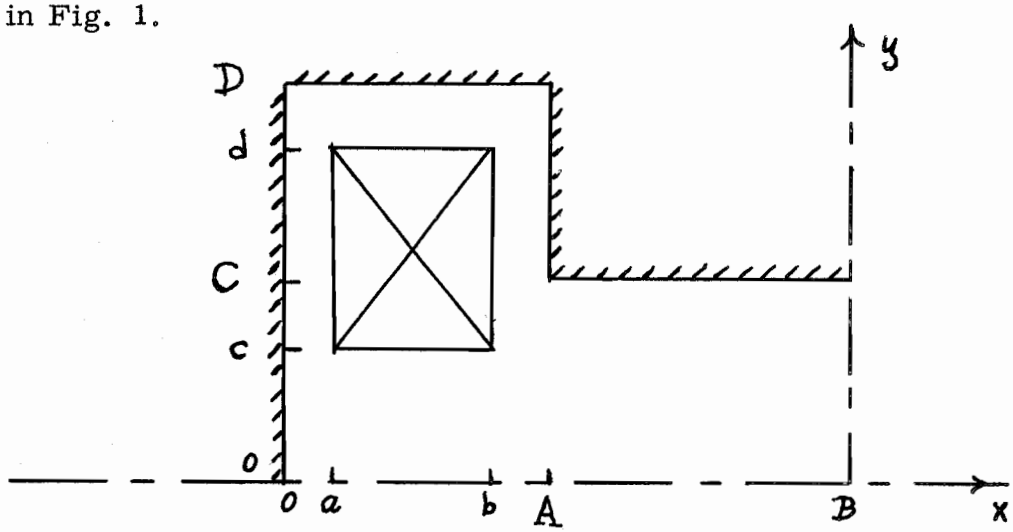

Figure 1. Quarter Section of Magnet Structure

The magnetic field within the current-carrying region may be represented by[2]

$$\vec{H} = 4\pi j_0 (d - y)\,\vec{i} - \nabla V . \tag{1}$$

Ampere's law gives $\nabla \times \vec{H} = 4\pi \vec{k} j_0$ indicating a constant current density along the z-axis. Since the sypplementary term is linear in y, it follows from $\nabla \cdot \vec{H} = 0$ that

$$\nabla^2 V = 0 . \tag{2}$$

Thus the boundary value problem that results is as follows. Solutions to Eq. (2) are to be found that are excited by single-layer and double-layer singularities resulting from the inclusion of the supplementary term in Eq. (1) in regions of current and its omission in the air region. In addition, boundary potentials will be placed on the iron that are determined by the flow of magnetic flux in the iron. Determination of these potentials will be discussed at a later stage.

ALGORITHM DEVELOPMENT

In general, only five-point algorithms[3] will be utilized since the accuracy required for the bubble chamber is only about one percent. A mesh is introduced such that

$$\Delta x = h \quad , \quad \Delta y = \ell \tag{3}$$

are the unit mesh sizes in the x and y directions. It is convenient for programming purposes to alter the origin label from (0, 0) to (1, 1). Thus

$$x = h(I-1) \qquad y = \ell(J-1) , \tag{4}$$

where (I, J) are integer measures.

Figure 2 shows the actual magnet outline of a quarter section in the mesh designation.

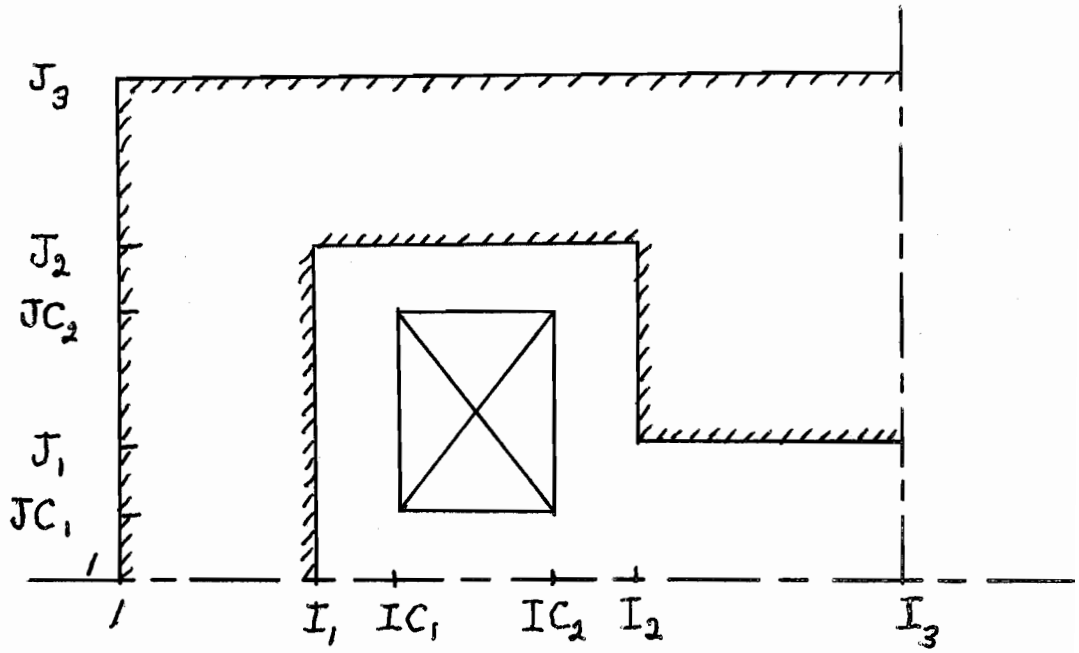

Figure 2. Mesh Coordinates for Quarter Section

The conservation of flux gives

$$\oint_S \left[\nabla V - 4\pi j_0 (d-y)\hat{i} \right] \cdot d\vec{S} = 0 \ . \tag{5}$$

Applying this to the standard point shown in Fig. 3 gives

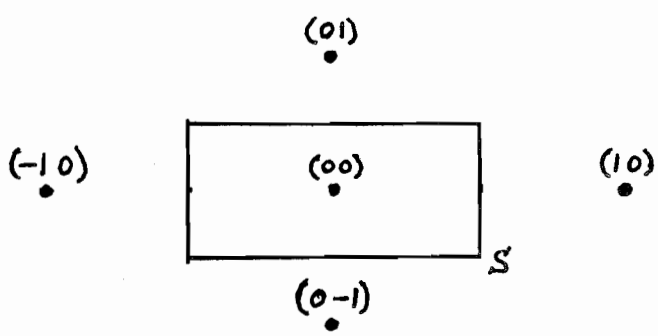

Figure 3. Standard Point (0, 0) and Surface S

$$\frac{V_{10}-V_{00}}{h}\,\ell + \frac{V_{01}-V_{00}}{\ell}\,h + \frac{V_{-10}-V_{00}}{h}\,\ell + \frac{V_{0-1}-V_{00}}{\ell}\,h = 0 \ . \tag{6}$$

If this is placed in the normal form,

$$\sum \omega_{ij} V_{ij} = 0 , \tag{7}$$

then the weights may be chosen to be

$$\omega_{10} = \omega_{-10} = \ell^2 \tag{8}$$

$$\omega_{01} = \omega_{0-1} = h^2 \tag{9}$$

$$\omega_{00} = -2(h^2 + \ell^2) . \tag{10}$$

The weights in Eqs. (8) - (10) hold for all standard points (0, 0) located at every point both inside and outside of the current with the following exceptions. The coil surfaces IC_1 and IC_2, the boundaries I_1, I_2, I_3, J_1 and J_2. In addition, directly below the coil a supplementary term is introduced to avoid the necessity of introducing double layer cuts.

These special considerations are now enumerated.

Coil Surface IC_1:

Equation (5) applied to Fig. 3 where the point (0, 0) lies on the surface IC_1 gives

$$\frac{V_{10} - V_{00}}{h} \ell - 4\pi j_0 \ell^2 (JC_2 - J)$$

$$+ \frac{V_{01} - V_{00}}{\ell} h + \frac{V_{-10} - V_{00}}{h} \ell + \frac{V_{0-1} - V_{00}}{\ell} h = 0 . \tag{11}$$

This equation has the algorithm form

$$\sum \omega_{ij} (V_{ij} + CV_{ij}) = 0 , \tag{12}$$

where the weights are the standard weights of Eqs. (8) - (10) and the current value is

$$CV_{10} = - \frac{(JC_2 - J)\, V_0}{(JC_2 - JC_1)(IC_2 - IC_1)} , \tag{13}$$

and the potential of the coil is

$$V_0 = 4\pi j_0 h \ell \, [IC_2 - IC_1][JC_2 - JC_1] . \tag{14}$$

All other current values are zero for this surface.

Coil Surface IC_2:

By similar reasoning the algorithm for which the point (0, 0) resides on the surface IC_2 becomes

$$\sum \omega_{ij} \left(V_{ij} + CV_{ij} \right) = 0 , \tag{15}$$

where the only current value is

$$CV_{-10} = \frac{(JC_2 - J)}{(JC_2 - JC_1)} \cdot \frac{V_0}{(IC_2 - IC_1)} . \tag{16}$$

Special Region Below Coil:

In order to avoid double layer cuts in the air region, the supplementary term in Eq. (1) is retained but given a constant value. Being constant, this term does not produce a current density in this region. Thus

$$\vec{H} = 4\pi j_0 (d - c) \vec{i} - \nabla V . \tag{17}$$

The result of Eq. (17) is to continue the single layers previously found. This gives the following current values.

Special Region Surface IC_1:

$$CV_{10} = - \frac{V_0}{IC_2 - IC_1} . \tag{18}$$

Special Region Surface IC_2:

$$CV_{-10} = \frac{V_0}{IC_2 - IC_1} \quad . \tag{19}$$

BOUNDARY VALUES

Since it is desired to have median plane symmetry, H_x must be zero on the median plane. Equation (17), therefore, requires a discontinuity in $\frac{\partial V}{\partial x}$ to cancel the supplementary term on the median plane. This can all be accomplished if, instead of $V = 0$, the median plane potential is chosen to be

$$V = \begin{cases} 0 & I \leq IC_1 \\ \frac{I - IC_1}{IC_2 - IC_1} V_0 & IC_1 < I < IC_2 \\ V_0 & IC_2 \leq I \end{cases} \tag{20}$$

At $I = I_3$, symmetry requires that

$$\frac{\partial V}{\partial x} = 0 \quad . \tag{21}$$

This gives for the points on this line

$$V_{10} = V_{-10} \quad , \tag{22}$$

which, when applied to the standard algorithm of Eq. (6), yields

$$\frac{V_{01} - V_{00}}{\ell} h + 2 \frac{V_{-10} - V_{00}}{h} \ell + \frac{V_{0-1} - V_{00}}{\ell} h = 0 \, . \tag{23}$$

On the boundaries of the iron

$$V = V_{BOUNDARY} \, , \tag{24}$$

where the boundary potential is to be determined from a flux condition to be

discussed later. On the pole face $J = J_1$, the potential is assumed to have a constant value determined from the flux condition.

MAGNETIC FIELD

The field H may be calculated from the potential V according to Eq. (1). Thus, for standard points (0, 0):

$$H_x = -\frac{V_{10} - V_{-10}}{2h} + \frac{V_0}{(IC_2 - IC_1)(JC_2 - JC_1)h} \begin{cases} 0 & \text{in air.} \\ JC_2 - J & \text{for} \begin{bmatrix} JC_1 < J < JC_2 \\ IC_1 < I < IC_2 \end{bmatrix} \\ JC_2 - JC_1 & \text{for} \begin{bmatrix} 1 < J < JC_1 \\ IC_1 < I < IC_2 \end{bmatrix} \end{cases} \tag{25}$$

$$H_y = -\frac{V_{01} - V_{0-1}}{2\ell} \tag{26}$$

for all regions.

On the coil surfaces IC_1 or IC_2, the supplementary terms in Eq. (25) are multiplied by $\frac{1}{2}$.

In order to construct the vector potential, it is useful to know the magnetic field H_x at the point $(0, -\frac{1}{2})$. This is given by

$$H_x(0,-\tfrac{1}{2}) = -\frac{1}{4h}\left[V_{10} + V_{1-1} - V_{-10} - V_{-1-1}\right] + \frac{V_0}{(IC_2 - IC_1)(JC_2 - JC_1)h} \begin{cases} 0 & \text{in air.} \\ JC_2 - J + \frac{1}{2} & \text{for} \begin{bmatrix} JC_1 < J \leq JC_2 \\ IC_1 < I < IC_2 \end{bmatrix} \\ JC_2 - JC_1 & \text{for} \begin{bmatrix} 2 < J \leq JC_1 \\ IC_1 < I < IC_2 \end{bmatrix} \end{cases} \tag{27}$$

Again, on the surfaces IC_1 and IC_2, the supplementary term in Eq. (27) is multiplied by $\frac{1}{2}$.

VECTOR POTENTIAL

A convenient method for representing the resulting flux pattern in the air and current is to have available the vector potential A_z. This may be calculated from the formula

$$A_z = -\int_{0,0}^{x,0} H_y \, dx + \int_{x,0}^{x,y} H_x \, dy \, . \tag{28}$$

The first integral requires H_y on the median plane at the point $(-\frac{1}{2}, 0)$.

$$H_y(-\tfrac{1}{2},0) = -\frac{1}{12\ell}\left[8V_{-11}+8V_{01}-7V_{-10}-7V_{00}-V_{-12}-V_{02}\right] . \tag{29}$$

Thus the increment in A_z in moving one mesh unit in the x-direction is

$$\Delta A_z = \frac{h}{12\ell}\left[8V_{-11}+8V_{01}-7V_{-10}-7V_{00}-V_{-12}-V_{02}\right] \tag{30}$$

The corresponding increment in the vector potential in moving one mesh unit in the y-direction is obtained by using Eq. (27) for H_x.

$$\Delta A_z = \ell \, H_x(0,-\tfrac{1}{2}) \tag{31}$$

Successive accumulations of ΔA_z from Eq. (30) yield the first integral in Eq. (28). Following this successive accumulations of ΔA_z from Eq. (31) yield the second integral in Eq. (28).

Thus, given the solution for the scalar potential V as obtained by iteration, it is possible to build up the corresponding vector potential distribution by the method outlined. A search for lines of constant vector potential then yields the lines of the magnetic field.

MAGNETIC CIRCUIT

The only element as yet undetermined is the procedure whereby the boundary potential on the iron may be determined. Figure 4 shows the elements of a magnetic circuit representing the actual magnet.

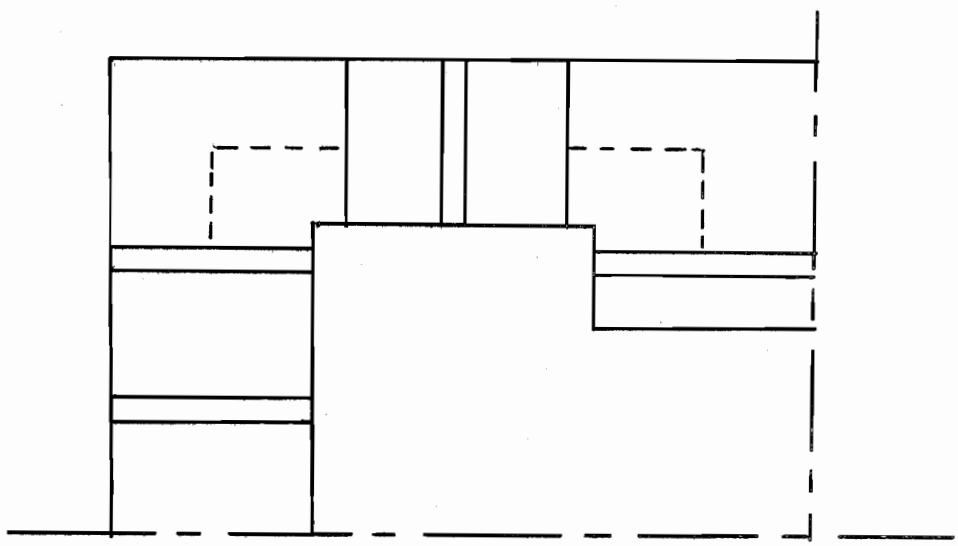

Figure 4. Elements of Magnetic Circuit

Initially a solution to the magnetostatic problem in which the boundary potential is set equal to zero is found. This solution is used to obtain the total median plane flux in the air. The magnetic circuit now is employed with the entire median plane flux in the quarter section sent through the return yoke on the left. Let the median plane flux be Φ_1 . The flux at J = 2 in the return leg is given by

$$\Phi_2 = \Phi_1 + H_x \ell L , \tag{32}$$

$$H_x = -\left(\frac{V_{10} - V_{00}}{h}\right)_{J=2} \tag{33}$$

on the boundary $I = I_1$ at the height $J = 1$. The magnet is assumed to be of length L in the z-direction.

The potential at the level $J = 2$ in the iron is given by

$$V_2 = H(B)\,\ell\,, \tag{34}$$

where H (B) is the H (B) curve appropriate for the iron used in the magnet. The flux density B to be used in Eq. (34) is given by

$$B = \frac{\Phi_2}{L h (I_1 - 1)} \quad . \tag{35}$$

In a similar manner for the level $J = 3$

$$\Phi_3 = \Phi_2 - \frac{\ell L}{h}\left(V_{10} - V_{00}\right)_{J=3} \tag{36}$$

$$V_3 = V_2 + \ell\, H\left[\frac{\Phi_3}{h L (I_1 - 1)}\right] \quad . \tag{37}$$

This process is continued until $J = J_2 - 1$. At this point, the V for $J = J_2$ is estimated according to

$$V_{J_2} = V_{J_2 - 1} + \tfrac{1}{2}\ell\left(J_3 - J_2 + 1\right) H\left[\frac{\Phi_{J_2}}{h L (I_1 - 1)}\right] \quad . \tag{38}$$

In turning the corner, the first potential will be designated as $V_{I_1} + 1$ and the corresponding flux Φ_{I_1+1} . Thus

$$\Phi_{I_1+1} = \Phi_{J_2} - \frac{h L}{\ell}\left(V_{0-1} - V_{00}\right)_{I = I_1 + 1}\,, \tag{39}$$

and

$$V_{I_1+1} = V_{J_2} + \tfrac{1}{2} h I_1\, H\left[\frac{\Phi_{I_1+1}}{\ell L (J_3 - J_2)}\right] \quad . \tag{41}$$

This process is continued clockwise around the iron path in a similar manner, putting in mesh increments for the length of the reluctance elements except at the corners where the mean length of the corner is inserted. On the $J = J_2$ face of the pole tip the potential is held constant at the last value in the above process.

In this manner a new set of boundary potentials is determined for the next iteration of potentials in the air and current regions. A further determination of boundary potentials is made and again used to specify the next iterative process. These cycles are repeated until the boundary potentials stabilize. About three or four cycles are required.

COMPUTER PROGRAM USAGE

The MURA computer program F-115 calculates the magnetic field for the geometry of Fig. 1. The computer identification of variables is shown in Fig. 2. A subroutine[4] MURCD3 is used to effect the input of the variables whose storage locations are shown in Table I. Since MURCD3 reads in a mixture of integer and floating point variables, care must be exercised as to the necessity of including or not including decimal points on the input data cards. The program is written in FORTRAN; therefore, variables with a leading I, J, K, L, M, and N are taken as integers. The B - H curve is read in as two separate arrays; first the flux density is read in ascending order; then the corresponding field intensity is read in the same order. Sense switch options are as follows:

SS1	Up: Normal operation Down: Saves the core on Tape 0
SS2	Up: Provides on-line print of the iteration number and residual Down: Stops the on-line print
SS3	Up: Normal operation Down: Terminates the scalar potential iteration and boundary adjustment and causes program to go to finishing up calculations
SS4	Up: Normal operation Down: Bypasses the plotting of the field
SS5 & 6	Not used

TABLE I

Parameter	Address	Description
I1A I2A I3A J1A J2A J3A IC1A IC2A JC1A JC2A	1 4 7 10 13 16 19 22 25 28	These are fixed point input variables specifying the shape of the magnet and position of coil. These must be read in. Note, Fig. 2 has the variables listed without the "A." The "A" is interpreted as actual in human usage where the origin is taken as (0, 0), while it is necessary to take the origin as (1, 1) internally in the computer. Thus all variables are converted internally (i.e., I1 = I1A + 1).
ELINCH $\equiv \Delta Y$ HINCH $\equiv \Delta X$	43 46	These are specified in inches.
EL $\equiv \Delta Y$ H $\equiv \Delta X$	44 47	These are specified in centimeters.
		One set of ΔX, ΔY's must be specified. The other set is then computed.
SF	49	Nominally set to 0.5; if not read in, it is a scale factor for the field plot size.
Alpha	51	Nominally set to 1.5; it is the overrelaxation parameter.

TABLE I (continued)

Parameter	Address	Description
Epalp	52	Nominally set to 0.001 test value to see if the residuals are uniformly decreasing so that an optimum alpha may be computed.
Fresid	53	Nominally set to 2×10^{-6}. Iterations continue until the normalized RMS residual is less than this value.
Amptrn	55	Nominally set to $0.795775 = \frac{10}{4\pi}$. This is the amp-turns.
Ampftr	56	Computed, this is the ratio of Amptrn ÷ 0.795775 since all calculations are made with the amp-turns set to 0.795775. This factor is necessary when referring to the B - H curve and just before outputting.
IRUN	57	Run number for easy identification.
DREST	58-67	Extra storage locations.
ID(62)	62	Maximum number of potential changes to be made on iron boundary (if zero, the iron is considered perfect).
D(63)	63	Nominally set to 0.1. If $\left\lvert \frac{V_{new} - V_{old}}{V_{new}} \right\rvert < ID(63)$ at the center of the pole, the calculations are terminated, otherwise they are terminated when the number of potential changes equals ID(62).

REFERENCES

1. S. C. Snowdon, "Use of Magnetic Circuit in FFAG Magnet Design," MURA TN-447 (unpublished).
2. L. Jackson Laslett, "Use of a Scalar Potential in Two-Dimensional Magnetostatic Computations with Distributed Currents," MURA-211 (unpublished). Also, S. C. Snowdon, "Relaxation Calculation of Integral Scaling Magnetic Fields Produced by Distributed Currents," MURA-591 (unpublished).
3. S. C. Snowdon, "Heavy Liquid Bubble Chamber Magnetic Fields," MURA TN-464 (unpublished).
4. T. W. Edwards, The MURA Input Subroutines MURCD2 and MURCD3, MURA-710 (unpublished).