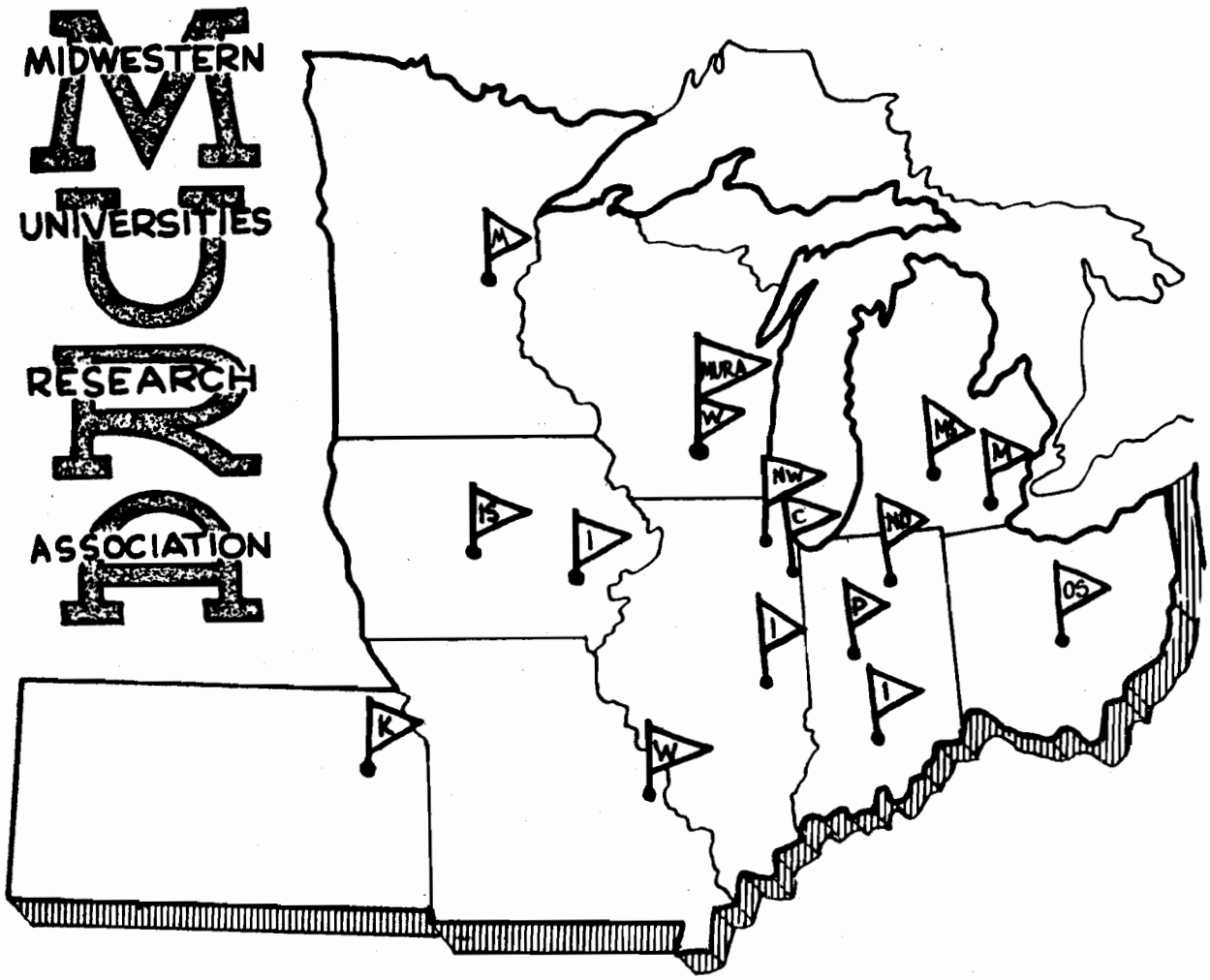


# STUDY OF A 500 MEV HIGH INTENSITY INJECTOR

September 8, 1964

S. C. Snowdon

**REPORT** **NUMBER** 700

LEGAL NOTICE

This report was prepared as an account of Government sponsored work. Neither the United States, nor the Commission, nor any person acting on behalf of the Commission:

A. Makes any warranty or representation, expressed or implied, with respect to the accuracy, completeness, or usefulness of the information contained in this report, or that the use of any information, apparatus, method, or process disclosed in this report may not infringe privately owned rights; or

B. Assumes any liabilities with respect to the use of, or for damages resulting from the use of any information, apparatus, method, or process disclosed in this report.

As used in the above, "person acting on behalf of the Commission" includes any employee or contractor of the Commission, or employee of such contractor, to the extent that such employee or contractor of the Commission, or employee of such contractor prepares, disseminates, or provides access to, any information pursuant to his employment or contract with the Commission, or his employment with such contractor.

Printed in USA. Price $1.75. Available from the Office of Technical Services, Department of Commerce, Washington 25, D. C.

MURA-700
UC-28, Particle Accelerators and
High Voltage Machines
TID-4500 (31st Edition)

MIDWESTERN UNIVERSITIES RESEARCH ASSOCIATION*

P.O. Box 6, Stoughton, Wisconsin

# STUDY OF A 500 MEV HIGH INTENSITY INJECTOR

S. C. Snowdon

September 8, 1964

## ABSTRACT

A design study is presented for a 500 Mev FFAG accelerator capable of producing $10^{14}$ protons per second. A 20 Mev linac is used to inject $.83 \times 10^{12}$ protons 120 times per second into the accelerator. If desired, up to 16 pulses may be stacked at 500 Mev thereby yielding $1.33 \times 10^{13}$ protons per ejected pulse. The study also includes a cost analysis.

*AEC Research and Development Report. Research supported by the U. S. Atomic Energy Commission, Contract No. AT(11-1)-384.

## TABLE OF CONTENTS


| | | | Page |
|---|---|---|---|
| I. | INTRODUCTION | | 1 |
| II. | ACKNOWLEDGMENTS | | 2 |
| III. | ACCELERATOR | | |
| | 3.1 | GENERAL DESCRIPTION | 4 |
| | 3.2 | ORBIT CALCULATIONS | |
| | | 3.2.1 EFFECT OF RADIAL STRAIGHT SECTIONS | 8 |
| | | 3.2.2 FIELD ERROR AND MIS-ALIGNMENT TOLERANCES | 9 |
| | | 3.2.3 INTENSITY CONSIDERATIONS | 11 |
| | | 3.2.4 BEAM SIZES | 13 |
| | 3.3 | MAGNET SYSTEM | |
| | | 3.3.1 GENERAL DESCRIPTION | 14 |
| | | 3.3.2 MAGNET BLOCK DESIGN AND FABRICATION | 16 |
| | | 3.3.3 COIL DESIGN AND FABRICATION | 17 |
| | | 3.3.4 FIELD TERMINATION | 30 |
| | | 3.3.5 SPECIAL MAGNETS | 30 |
| | | 3.3.6 MAGNET POWER SUPPLY AND COOLING | 31 |
| | | 3.3.7 MAGNETIC FIELD MEASUREMENTS | 32 |
| | | 3.3.8 MAGNET SUPPORT AND ALIGNMENT | 33 |
| | 3.4 | VACUUM SYSTEM | |
| | | 3.4.1 VACUUM ENVELOPE | 33 |
| | | 3.4.2 PUMPING SYSTEM | 34 |
| | 3.5 | INJECTION SYSTEM | |
| | | 3.5.1 GENERAL DESCRIPTION | 35 |
| | | 3.5.2 ION SOURCE, PREINJECTOR, AND BUNCHER | 35 |
| | | 3.5.3 LINEAR ACCELERATOR | 37 |
| | | 3.5.4 BEAM TRANSPORT SYSTEM | 37 |
| | | 3.5.5 MULTITURN INJECTION SYSTEM | 37 |

TABLE OF CONTENTS (continued)


| | | | Page |
|---|---|---|---|
| | 3.6 | RADIO FREQUENCY ACCELERATING SYSTEM | |
| | | 3.6.1 ACCELERATION CYCLE | 40 |
| | | 3.6.2 RF SYSTEM | 40 |
| | 3.7 | BEAM EXTRACTION SYSTEM | |
| | | 3.7.1 KICKER MAGNET | 46 |
| | | 3.7.2 DEFLECTOR MAGNET | 46 |
| | 3.8 | RADIATION PROBLEMS | |
| | | 3.8.1 SHIELDING REQUIREMENTS | 47 |
| | 3.9 | PHYSICAL PLANT | |
| | | 3.9.1 PHYSICAL PLANT | 47 |
| IV. | UTILITY OF ACCELERATOR | | |
| | 4.1 | EXPECTED BEAM INTENSITIES | 50 |
| | 4.2 | USE AS AN INJECTOR | 50 |
| V. | CONSTRUCTION SCHEDULE AND MANPOWER AND COST ESTIMATES | | |
| | 5.1 | CONSTRUCTION SCHEDULE | 53 |
| | 5.2 | COST ESTIMATE | 53 |

## TABLES


| Table Number | Title | Page |
|---|---|---|
| I | Estimated Costs | 3 |
| II | Accelerator Parameters | 5 |
| III | Magnet Excitation and Coil Design | 19 |
| IV | Coil Weight, Power and Cooling | 29 |
| V | Performance Parameters of Injection System | 36 |
| VI | Linear Accelerator Parameters | 38 |
| VII | Acceleration Parameters | 41 |
| VIII | Parameters of RF Accelerating Stage | 43 |
| IX | RF Acceleration Drift Tube Parameters | 44 |
| X | Ferrite Tuning Parameters | 45 |
| XI | Shielding Requirements | 48 |
| XII | Building Dimensions, Shielding and Cranes | 49 |
| XIII | Space Charge Limits | 52 |

FIGURES


| Figure Number | Title | Figure Follows Page |
|---|---|---|
| 1 | Plan View of Accelerator | 1 |
| 2 | Resonance Diagram | 9 |
| 3 | Magnet Superperiod | 14 |
| 4 | Typical Magnet Block | 14 |
| 5 | Typical 590 Amp Coil | 18 |
| 6 | Typical 290 Amp Coil | 18 |
| 7 | Special Magnet Block | 30 |
| 8 | Typical Vacuum Chamber Segment | 33 |
| 9 | R. F. Drift Tube in Superperiod | 40 |
| 10 | Tuning Inductor | 41 |
| 11 | Building Plan | 48 |
| 12 | Building Cross Section | 48 |

# I. INTRODUCTION

In keeping with the improvement programs currently being considered for the Brookhaven AGS and the Argonne ZGS, it was thought advisable to determine the effectiveness with which an FFAG booster accelerator could meet the injection demands presently of interest. A 500 Mev FFAG synchrotron seems to be a reasonable way of producing $10^{14}$ protons per second. The following report is a design study which demonstrates the feasibility of constructing such an accelerator. For reasons of efficiency, the format of our 12.5 Bev proposal is followed. The general details of orbit theory, magnet calculations and fabrication methods presented in the 12.5 Bev proposal also apply here and are not repeated. Only the details specific to a 500 Mev FFAG synchrotron are presented in this study.

The proposed accelerator, shown in plan view in Fig. 1, has an outer orbit diameter of 45 feet. The 72 magnet blocks have a total weight of approximately 450 tons and require a total power of approximately 3.4 megawatts for excitation. An additional 400 kilowatts of radio frequency power are required for acceleration.

Table I gives a resumé of the estimated costs of the components of the accelerator.

We estimate that a staff of 125 people, including 35 physicists and engineers, will be required for the construction period of four years. Of this time, roughly one year will be spent in component modeling, one year in component construction, one year in testing and measurement, and one year in final assembly and operational testing.

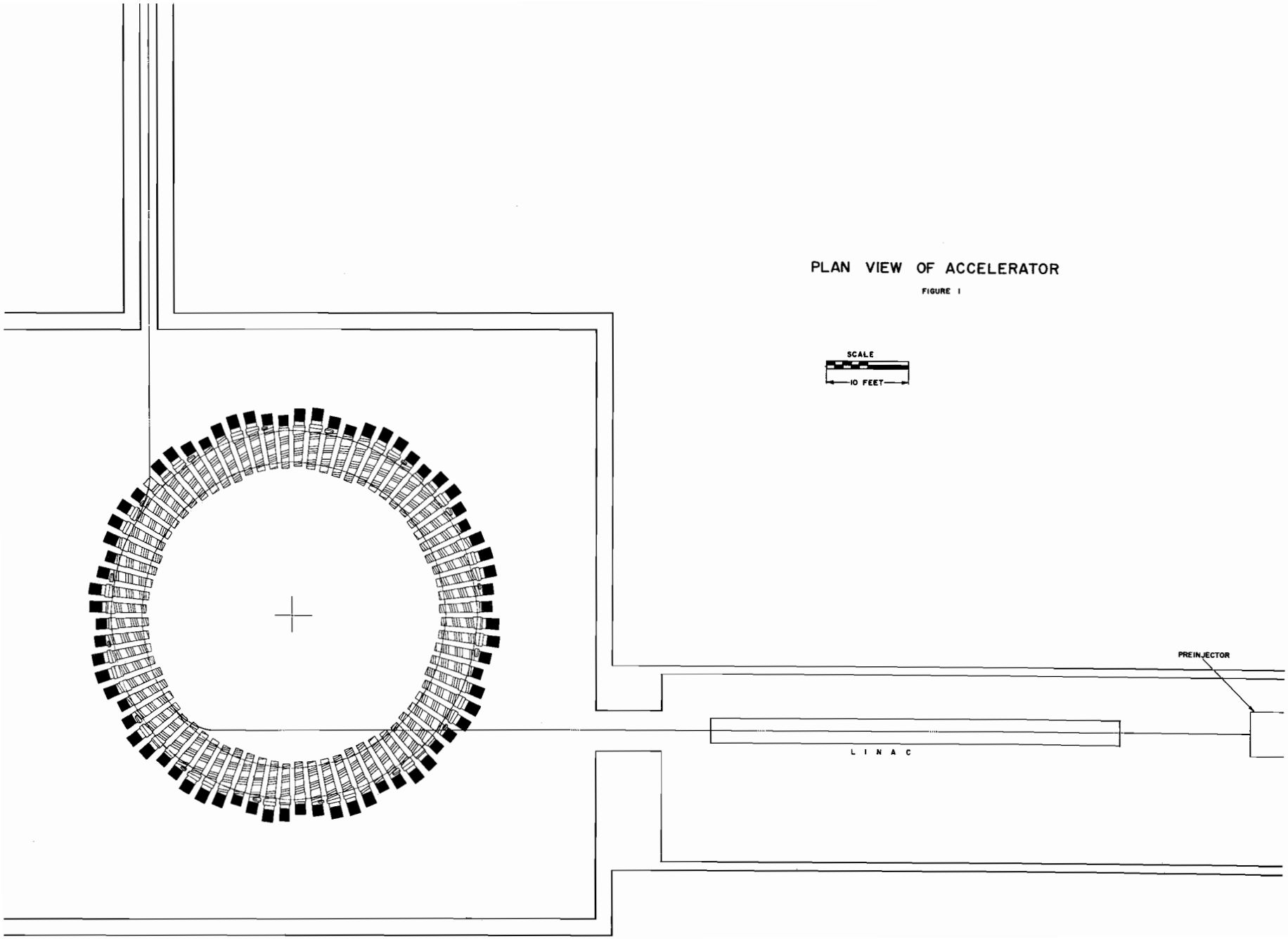


PLAN VIEW OF ACCELERATOR

FIGURE 1

## II. ACKNOWLEDGMENTS

The following persons have contributed to the 500 Mev accelerator study either directly or through published articles.

Orbit Theory - G. Parzen*, H. K. Meier
Field Error Tolerances - S. C. Snowdon
Space Charge Limitations - D. A. Swenson, S. C. Snowdon
Injection Considerations - C. D. Curtis, S. C. Snowdon
Magnet Ring - R. S. Christian**, S. C. Snowdon, W. R. Winter
Magnet Coils - H. Kamei, S. C. Snowdon, W. R. Winter
Magnet Coil Shunts - J. W. Hicks
Magnet Power Supply - F. L. Peterson
Magnetic Field Measuring System - J. W. Hicks, S. C. Snowdon
Vacuum System - C. W. Owen
Ion Source and Preinjection - C. D. Curtis
Beam Transport - D. A. Swenson
Linear Accelerator - D. E. Young
R. F. Accelerating System - E. M. Rowe, R. H. Hilden
Extraction System - M. F. Shea***, E. M. Rowe
Shielding Requirements - A. Galonsky****
Physical Plant - W. R. Winter
Cost Estimation - M. W. Keith, F. T. Cole*****, W. R. Winter, D. E. Young, E. M. Rowe, S. C. Snowdon
Editor - S. C. Snowdon

* - Now at Brookhaven National Laboratory
** - Now at Purdue University
*** - Now at Lockheed Missile and Space Company
**** - Now at Michigan State University
***** - Now at Lawrence Radiation Laboratory

## TABLE I

### ESTIMATED COSTS

| | |
|---|---|
| Accelerator Components | |
| Magnet System | 1,869,000 |
| R. F. Acceleration System | 578,000 |
| Injection System | 1,229,000 |
| Vacuum System | 285,000 |
| Extraction System | 495,000 |
| Controls and Miscellaneous | 386,000 |
| Subtotal | 4,842,000 |
| Engineering, Design, Inspection and Administration | 8,075,000 |
| Accelerator Building and Site Development | 1,480,000 |
| Total Estimated Cost | 14,397,000 |
| Escalation and Contingency | 1,862,000 |
| Total | 16,259,000 |

# III. ACCELERATOR

## 3.1 GENERAL DESCRIPTION

A plan view of the accelerator is shown in Fig. 1. Protons are formed in an ion source and accelerated to an energy of 750 Kev in a Cockroft-Walton preinjector. At this energy they are transported by a series of bending and matching lenses through a prebuncher into the injector, an Alvarez standing wave linear accelerator of one tank. In the injector, protons are accelerated to an energy of 20 Mev. The beam emerging from the linear accelerator passes through a drift space, and then undergoes a parallel displacement down five feet to the elevation of the median plane of the accelerator and enters the FFAG accelerator through a series of bending and matching magnets. The beam is then bent onto the desired orbit by a pulsed magnetic inflector located inside the main vacuum chamber.

Parameters of the accelerator are given in Table II. The radial straight sections split the magnet into 72 blocks, of weight varying between 5.4 and 7.4 tons. The magnetic field repeats after a period of two spiral sectors, or nine radial straight sections. Thus there are 8 superperiods per revolution, each containing nine different magnet blocks with 8 magnet blocks of each type.

The direction of the particle motion is that closest to the direction of the field spiralling. Then the angle between the spirals and the equilibrium orbit varies only by $\pm 3^{\circ}$ about the mean of $12^{\circ}$. Extraction of the beam is aided by this direction of spiralling.

# TABLE II

## ACCELERATOR PARAMETERS

### MAGNET SYSTEM

$R_o$ = 270'' = 6.858 m (radius of 500 Mev equilibrium orbit)

$R_{Max}$ = 273'' = 6.934 m (maximum good field radius)

$R_{Inj}$ = 223.905'' = 5.687 m (radius of 20 Mev equilibrium orbit)

$R_{Min}$ = 220'' = 5.588 m (minimum good field radius)

$\Delta R$ = 53'' = 1.346 m (radial aperture)

$L_R$ = 9.062'' (length of radial straight section at equilibrium orbit)

$L_M$ = 14.499'' (azimuthal length of magnet at equilibrium orbit)

$G_{Inj}$ = 4.719'' (vertical magnet aperture at injection)

$g_{Inj}$ = 2.0 = 5.08 cm (available aperture inside vacuum tube at injection)

$G_{Min}$ = 3.00'' (vertical magnet aperture at $R_{Max}$)

$g_{Min}$ = 1.00 = 2.54 cm (minimum available aperture inside vacuum tank at $R_{Max}$)

$B_{Ave}(R_o)$ = 5,301.8 gauss

$B_{Ave}(R_{Max})$ = 5,784.9 gauss

$B_{Ave}(R_{Inj})$ = 1,142.3 gauss

Total Magnet Weight = 450 Tons

Total Coil Weight = 27 Tons

Total Magnet Power = 3.4 megawatts (including power in shunts)

N = 16 (number of spiral sectors)

M = 72 (number of radial straight sections)

N' = 8 (number of superperiods per revolution)

## ORBIT PARAMETERS

$\nu_x$ = 3.211 (horizontal betatron oscillation frequency)

$\nu_y$ = 2.256 (vertical betatron oscillation frequency)

$A_x = \pm 2.45''$ at injection (average amplitude)

$A_y = \pm .84''$ at injection (average amplitude)

k = 8.2

$1/w = 75$

Angle of spiral with circle = $12.0389^{\circ}$

## R. F. SYSTEM

| | | |
|---|---|---|
| Injection Frequency | = | 1.705 Mc |
| Transition Energy | = | 1908 Mev (outside range of interest) |
| Final Frequency | = | 5.273 Mc |
| Total R. F. Power | = | 320 Kw |

The choice of injection energy has been examined. As the injection energy is raised, the main accelerator ring is simplified, because the low energy, low field end of the magnet, which is a difficult part in which to maintain field tolerances, becomes superfluous. Further, the radial aperture decreases, making the vacuum chamber and the frequency modulation swing of the radio frequency accelerating system both smaller. Finally, the space charge limit of the accelerator increases rapidly with increasing injection energy. For a 500 Mev accelerator it seems that 20 Mev is a reasonable injection energy.

With the acceleration repetition rate of 120 cycles per second, our design intensity of $10^{14}$ particles per second is achieved by injecting 10 turns from the linear accelerator, whose current during the pulse is about 24 milliamperes. The multiturn injection system employs four pulsed magnets located inside the vacuum chamber, which move the equilibrium orbit away from the inflector in the radial direction and up from the median plane in the vertical direction over a period of up to approximately 200 turns.

Particles are accelerated from injection at a repetition rate of 120 cycles per second to the final energy of 500 Mev. No stacking in the FFAG is contemplated but up to 16 bunches could be stacked at the final energy to give $1.35 \times 10^{13}$ circulating protons; about a factor of two under the space charge limit. If stacking is employed, the design intensity of $10^{14}$ protons per second is achieved by ejecting the final charge about 8 times per second. Otherwise, if no stacking is

employed, the injected charge is ejected 120 times per second to give $10^{14}$ protons per second. The 4 accelerating drift tubes are distributed uniformly around the accelerator. There is one drift tube in each two superperiods.

## 3.2 ORBIT CALCULATIONS

3.2.1 EFFECTS OF RADIAL STRAIGHT SECTIONS. The general effects on orbit dynamics of the introduction of radial straight sections were discussed in the 12.5 Bev proposal. The proposed design has nine radial straight sections in every two spiral sectors. The vertical field component drops to about 30 per cent of its value in adjacent magnets.

The effects due to the introduction of radial straight sections have been shown by digital computation to be acceptably small. First, the nonscaling changes of $\nu_x$ and $\nu_y$ with energy or radius are small compared to the distance between resonances. We find

$$\Delta \nu_x \lesssim .025$$

$$\Delta \nu_y \lesssim .007$$

In any discussion of the effects of nonlinear resonances, the definition of the stability limits must be specified. The value of the radial stability limit $A_x$ we quote in Table II and use throughout is the threshold amplitude at which the vertical motion begins to grow from very small values.

It may be that the vertical motion is stable for some large amplitudes, but stability is much more certain below the threshold, and we therefore use this value.

The value $A_y$ of the vertical stability limit is the amplitude at which $\nu_y$ has changed by .25, bringing it to the integral resonance $\nu_y = 2.0$. Here our computer studies have found stable vertical motion with a wide range of field perturbations, including those which drive the resonance at larger amplitudes. As in the radial motion, the value we use can be conservatively guaranteed to give stable motion.

The introduction of radial straight sections reduces the periodicity from $N = 16$ to $N' = 8$. The new essential resonances which might have harmful effects are $\nu_x = 4$ or $\frac{1}{2} N'$ and $\nu_x = 2.667$ or $\frac{1}{3} N'$ in the radial motion, $\nu_y = 2$ or $\frac{1}{4} N'$ in the vertical motion and the coupling resonance $\nu_x + 2\nu_y = N' = 8$. These essential resonances and nearby field error resonances are shown on the working point diagram in Fig. 2.

Our computational studies have found no lowering of the stability limits or other harmful effects of these resonances. The stability limits given in Table II include all the effects of radial straight sections as well as the effects of the scaling nonlinearities.

3.2.2 FIELD ERROR AND MISALIGNMENT TOLERANCES. The effect of field errors and misalignments in an FFAG accelerator are similar to those in AG synchrotrons, except for the additional effects of nonlinear forces. These effects are small in the design of the proposed accelerator.

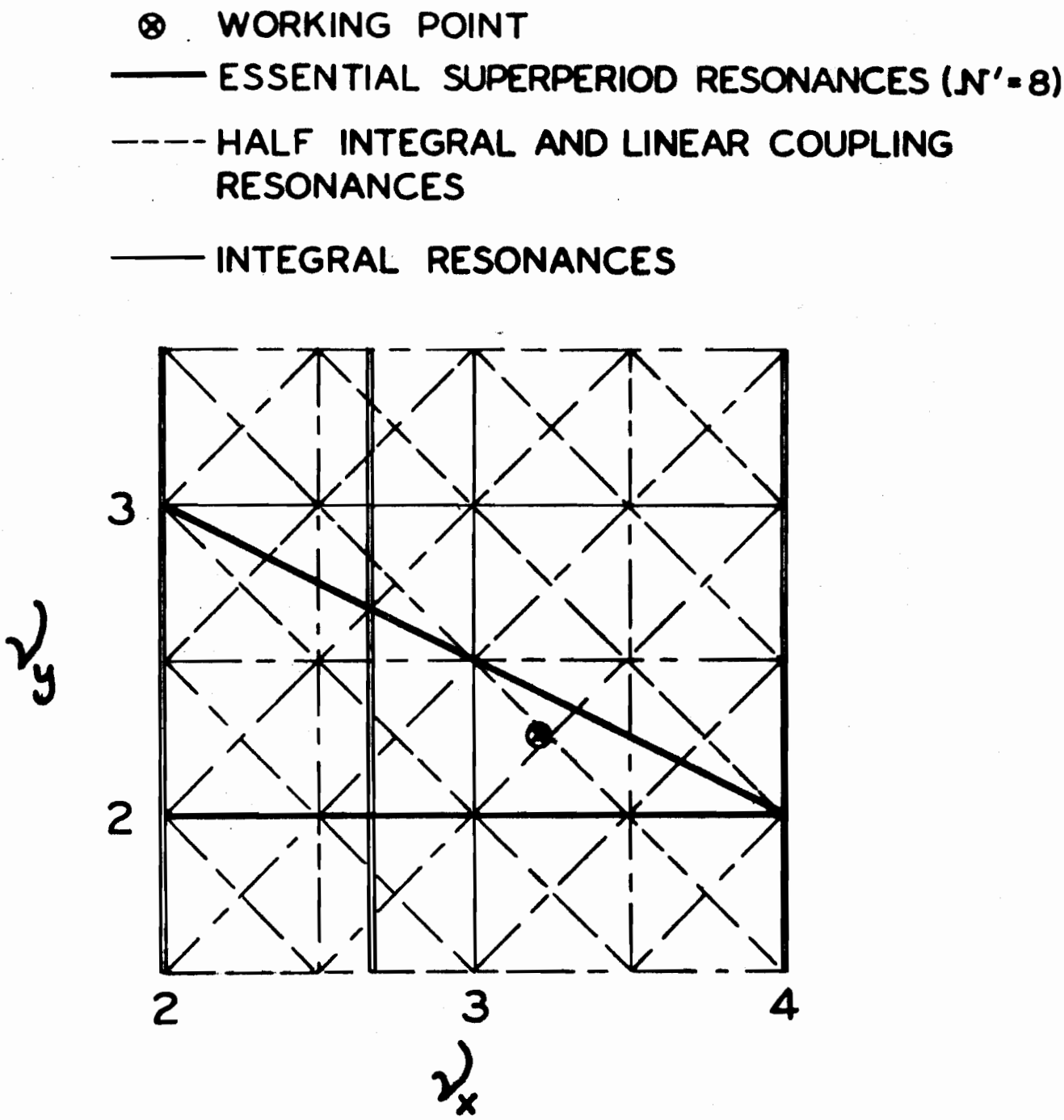


FIG. 2 RESONANCE DIAGRAM

In the radial motion, most of the change of $\nu_x$ with amplitude takes place at amplitudes beyond the threshold for y - growth, which we do not plan to use. In the vertical motion, we again plan to use smaller amplitudes, so that $\nu_y$ will not be changed to a resonance.

Integral resonances give rise to the tightest tolerances on field errors in our design. Field errors which disturb the median plane symmetry and give rise to resonances involving the vertical motion have the most serious effects because of the smaller vertical aperture and because of the change of $\nu_y$ with amplitude. Our analytical and digital studies show that the error harmonics of the field close to $\nu_y$ must be kept to less than .033 per cent in order to keep forced vertical equilibrium orbit displacements less than .2". These harmonics arise from random errors in the fields of individual magnets; harmonics of .033 per cent correspond to rms field errors of .28 per cent of the average field. These tolerances arise from

| | |
|---|---|
| Twisted magnet block (.020"/60") | .026% |
| Relative Radial Displacement of Poles (.010") | .007% |
| Radial Displacement of Single Pole (.010") | .013% |
| Fluctuation in Radial Gap between Magnet Blocks (.025") | .003% |
| Fluctuation in Excitation from Block to Block (.05%) | .007% |
| Net RMS | .031% |

These tolerances can be achieved quite easily. Actually one will try to achieve somewhat better tolerances and thereby reduce the equilibrium orbit displacement.

The direct effects of field errors which do not disturb median plane symmetry are considerably smaller. Here the harmonics close to $\nu_x$ must be .1 per cent of the average field to give rise to displacements of the equilibrium orbit of .133", while harmonics far from $\nu_x$ can be much larger.

Complete stability studies equivalent to those in our 12.5 Bev proposal have not as yet been carried out. These will be performed should further interest in this accelerator arise.

3.2.3 INTENSITY CONSIDERATIONS. The radial phase space area available in the FFAG accelerator is approximately 300 $\pi$ millirad-cm and the vertical phase space area available is approximately 25 $\pi$ millirad-cm. The output emittance from the 20 Mev linac is 1.65 $\pi$ millirad-cm per transverse mode. Hence, the radial phase space will contain 180 turns and the vertical 15 within the limits set by Liouville's theorem. The design intensity of $10^{14}$ particles per second is achieved by injecting and accelerating $.83 \times 10^{12}$ particles 120 times per second. This injected charge corresponds to a circulating current of .23 amperes or about 10 turns of a 24 ma. linear accelerator.

The multiturn injection system utilizes the vertical phase space by injection off the median plane where it occupies about 26 per cent of the phase area available, and 10 turns of the radial phase space where it occupies 5.5 per cent of the available phase area.

The limitations of Liouville's theorem need only be calculated at injection, because adiabatic damping, a consequence of Liouville's theorem, reduces the beam amplitudes during acceleration. The limitations imposed by Liouville's theorem in synchrotron phase space during acceleration are closely related to the radio frequency system design. Adequate synchrotron phase area exists as shown in Table VIII in Section 3.6.1.

The accelerator is somewhat conservative with respect to space charge limitations. With the amplitudes of Table II, an assumed change of $\nu_y$ from 2.256 to 2.0, a bunching factor of 3/8, and a reduction factor of 1.58 that accounts for image effects, the unneutralized space charge limit at injection is $3.56 \times 10^{12}$ protons. This corresponds to accelerating $2.14 \times 10^{14}$ particles per second, a factor of 2.14 higher than our design intensity.

Particle betatron oscillation amplitudes damp by a factor of 2.366 during acceleration; whereas, the stability limits do not damp, but grow in proportion to radius. Amplitudes at injection which are equal to the stability limits damp to $A_x = \pm 1.037''$, $A_y = \pm .355''$ at 500 Mev. With these amplitudes, the corresponding unneutralized space charge limit including the image effects (factor of 1.65 reduction) and the bunching factor of 3/8 is $2.37 \times 10^{13}$ protons. If stacking is used the injected charge of $.83 \times 10^{12}$ protons will be stacked 16 times to give $1.33 \times 10^{13}$ protons circulating at 500 Mev, a factor of 1.78 under the space charge limit. If no stacking is employed there are no space charge problems at

500 Mev in the FFAG accelerator.

3.2.4 BEAM SIZES. If the emittance of the 24 ma. linear accelerator beam is perfectly matched into the FFAG accelerator, a single turn will have a radial amplitude $a_x = .21''$ and a vertical amplitude $a_y = .25''$. The 10 turns required for our design intensity would then, assuming 100 per cent efficiency in the filling of radial phase space, be contained within amplitudes $a_x = .21\sqrt{10} = .66''$ and $a_y = .25''$. Filling efficiencies this high cannot be achieved in practice and, in any event, this beam will contain only $.43 \times 10^{12}$ particles within the bunched space charge limit, whereas $.83 \times 10^{12}$ must be injected. The beam size in our accelerator is in fact determined by the requirements of the multiturn injection system, for the radial stepover per turn of the perturbed equilibrium orbit must be large enough that the orbit moves the beam width plus septum width in four turns. In the present case, with a total beam width of .42'' and a septum width of .04'', the beam must move radially 1.15'' in 10 turns. In the vertical direction the beam must be injected off the median plane by .25'' in order to reduce the charge density. Misalignment effects will also affect the beam size, the principal effect occurring in the vertical motion (.17''). We, therefore, have a beam of amplitudes $a_x = 1.15''$, $a_y = .67''$. The bunched space

charge limit of a beam of this size at injection is $1.46 \times 10^{12}$ particles, a factor of 1.76 over the required number. The radial extent of the beam due to its energy spread is less than .04" at injection.

This beam damps in size to $a_x$ = .49", $a_y$ = .41" at 500 Mev. The vertical amplitude is not damped by the adiabatic damping factor of 2.366 since only .50" of its initial amplitude was considered in betatron oscillation, the remaining .17" due to magnet misalignments actually grows to .20". The radial extent of the beam due to its energy spread is less than .01" per pulse giving a total beam size 1.00" by .82".

## 3.3. MAGNET SYSTEM

3.3.1 GENERAL DESCRIPTION. The nine magnets of a superperiod are shown in Fig. 3. A typical magnet block is shown in Fig. 4 and typical coils in Figs. 5 and 6.

Except for one special magnet, which will be discussed separately in Section 3.3.5, each magnet block is a truncated wedge 14.5 inches wide at the 270 inch radius, 11.8 inches wide at the 220 inch radius, 60 inches in height and with radial widths varying from 77 to 90 inches depending on its position in the superperiod. The magnet aperture is 53" in radial extent, from the maximum good field radius, where the nonscaling gap is 3 inches, to the minimum good field radius, where the scaling gap is 4.77 inches. The magnet blocks vary in weight from 5.4 tons to 7.4 tons, again depending on their position in the superperiod.

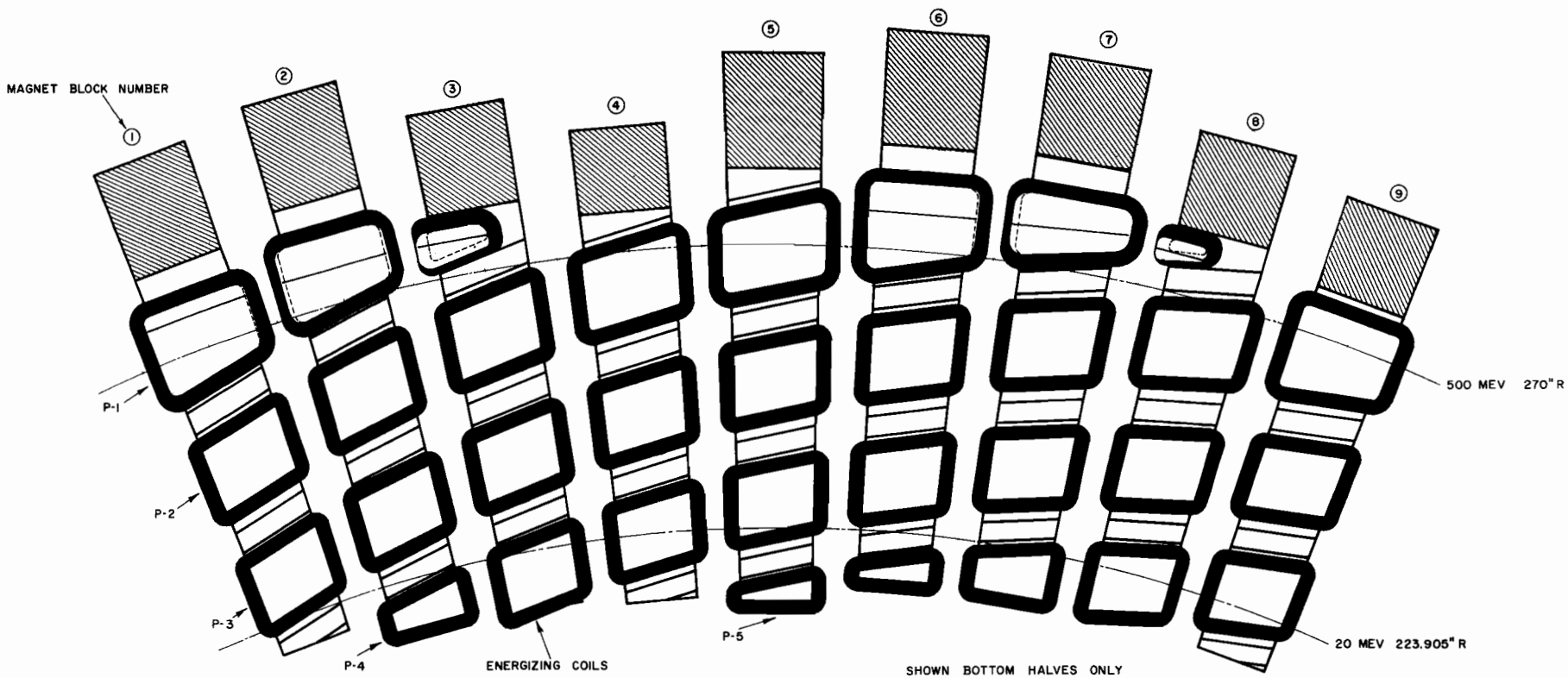


MAGNET SUPERPERIOD

FIGURE 3

SCALE

20 INCHES

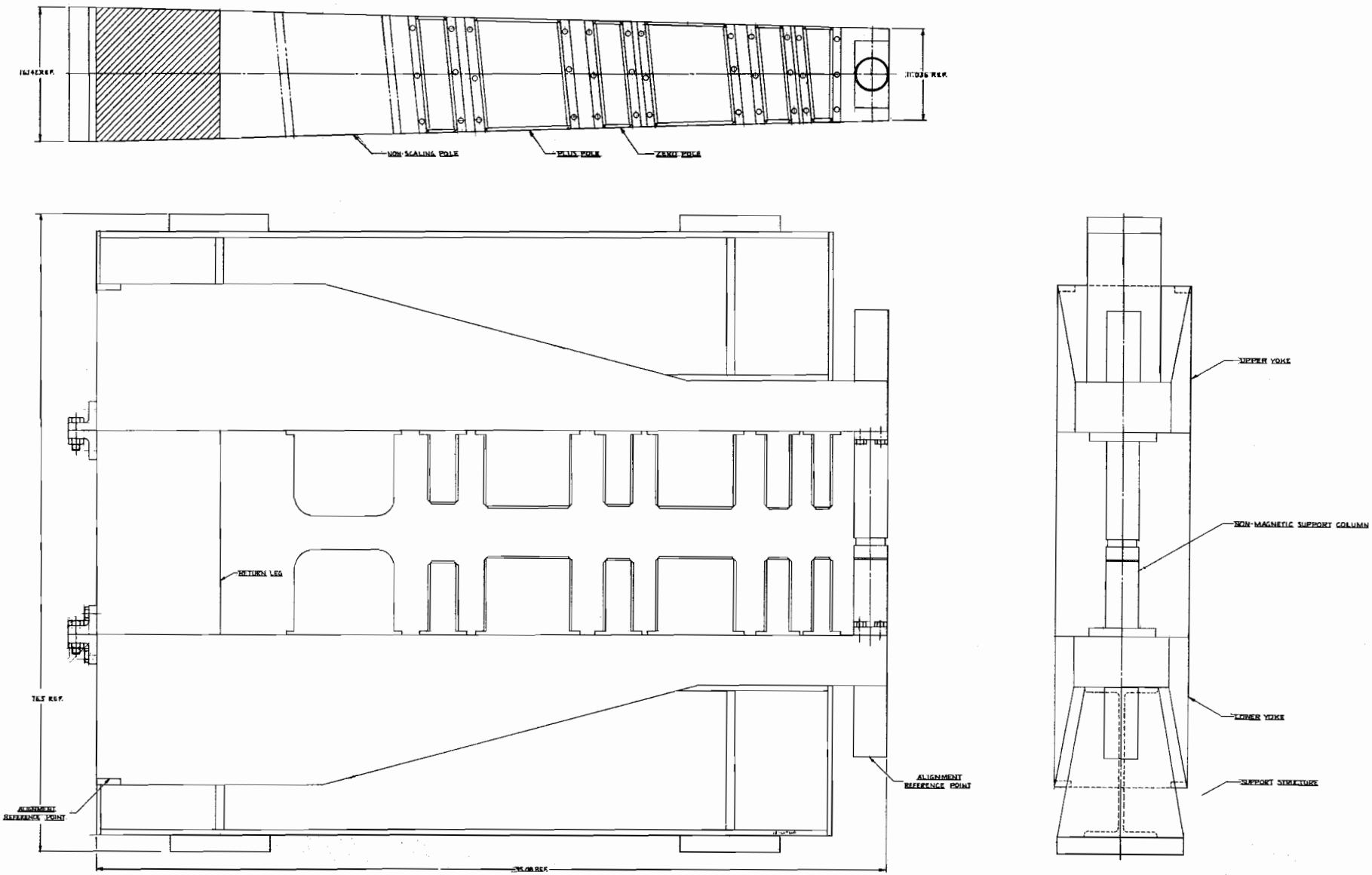


TYPICAL MAGNET BLOCK

Figure 4

A block is assembled from top and bottom halves which are mirror images of one another. Each half is constructed around a yoke that is 6 inches thick in the scaling pole region, increasing to thicknesses ranging from 14 inches to 19 inches in the nonscaling pole region in order to carry the magnetic flux. The vertical return leg is also 14 to 19 inches thick, depending on the total flux carried. On the back of each slab an I-beam is welded to stiffen the slab. The other cross member of the I-beam is welded to two plates which, on the bottom half, is the supporting pad for the magnet assembly. The top yoke is supported from the bottom yoke by the vertical return leg on one end and by nonmagnetic support columns at the other (low-field) end.

The spiral poles are to be machined separately and bolted to the yoke surfaces. Each scaling spiral pole is a chamfered rectangular block in the cross section perpendicular to the azimuthal direction. Between each pair of positive spiral poles of a block is a zero pole. Since zero poles are not energized except for small corrections, there are no nonscaling zero poles.

The positive poles are energized by separate windings, wound on jigs and mounted on the poles. The eight main coils of a typical magnet block will weigh about 750 pounds altogether. Power and cooling water are fed to the coils by bus bars and manifolds mounted on the top and bottom of each magnet block.

Magnet power will be located in a generator room and will be accessible at all times.

Each magnet block supports the vacuum tank segment it contains against the air load. Support rods pass through the zero poles to a support beam which rests on the yoke and on the support column at the low field end of the magnet.

3.3.2 MAGNET BLOCK DESIGN AND FABRICATION. Our magnet design has evolved from our experience in production of the 50 Mev accelerator magnets, a nine-ton radial sector model magnet, the scale model spiral sector magnet and from extensive consultations with steel producers and fabricators. Commercial SAE-1010 steel offers a suitable compromise between the saturation induction and retentivity properties of pure iron and the mechanical properties of steel and will be utilized for the magnet.

The upper and lower poles, including the thicker yokes at large radius will each be a single forged piece. The vertical return leg will be a separate forged piece. Forging has the advantage of insuring a high degree of uniformity of magnetic and mechanical properties. Subsequent machining and welding will be followed by stress-relieving anneals to preserve magnetic properties and dimensional stability.

With the exception of the nonscaling poles, all machined surfaces are flat and lend themselves to routine production and machining. The tolerance on radial displacements of the spiral poles will be held to $\pm$ .005 inches

although ± .010" is allowed. The tolerance on the vertical gap will be held to ± .005 inches. In this case it should be noted that individual adjustments in coil excitation can offset machining tolerances. Machining of the nonscaling poles will be accomplished through the use of a numerically controlled contour milling technique which was successful on the nonscaling poles of our scale model spiral sector magnet.

3. 3. 3 COIL DESIGN AND FABRICATION.

1. Nominal 590 ampere conductor. These will be water-cooled, hollow, copper conductor and typically of rectangular cross section 1/2 inch by 1/4 inch outside dimensions, with a .130 inch diameter hole. Turns, layers, and coils will be wrapped with glass tape and potted with an epoxy resin for insulation. The insulation will consist of a double wrap of .010 inch glass tape on each turn with a .020 inch spacer between turns, a single wrap of .010 inch glass tape on each layer with a .030 inch spacer between layers, yielding altogether .060 inch thickness between turns and .090 inch thickness between layers. Current density in these windings is about 5000 amperes per square inch. The coil is shown in Fig. 5.

2. Nominal 290 ampere conductor. These will be water-cooled, hollow, copper conductor of rectangular cross section .375 inch by .181 inch outside dimensions, with a .100 inch diameter hole. Insulation will be the same as for the .590 ampere conductor. Current density in these windings is again about 5000 amperes per square inch. This coil is shown in Fig. 6.

3. Nominal 50 ampere conductor. These will be solid copper wire of square cross section 1/4 inch by 1/4 inch. The insulation build will be such that there will be .050 inches between conductors. The current density will be about 800 amperes per square inch and will not be water-cooled.
4. Nominal 10 ampere conductor. These will be solid copper wire .150 inch by .150 inch. Insulation will be about .030 inch between turns. The current density will be about 450 amperes per square inch and will not be water-cooled.

These coils are determined by the use of a magnetic circuit to account for the reluctance drops in the iron, air gap reluctances being determined by the magnetostatic field computational program UNICYL. The magnetic circuit predictions have been checked against field measurements in the scale model spiral sector magnet with good success. The agreement which is better than 10 per cent, extends to the calculation of all positive pole fields and zero pole fields as a function of excitation. It is therefore felt that the use of the magnetic circuit enables one to predict the required windings within 10 per cent.

The remaining 10 per cent uncertainty is caused by the inability to produce steel to a specified normal induction curve. Typical discrepancies in various heats of steel are about $\pm$ 40 oersteds at 200 oersteds or $\pm$ 20%. Sufficient steel can be incorporated into the poles and yokes so that the

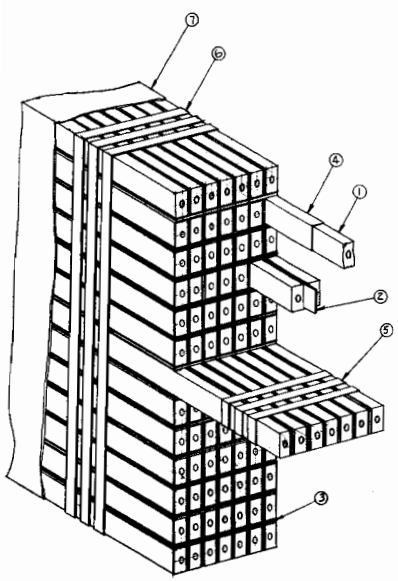


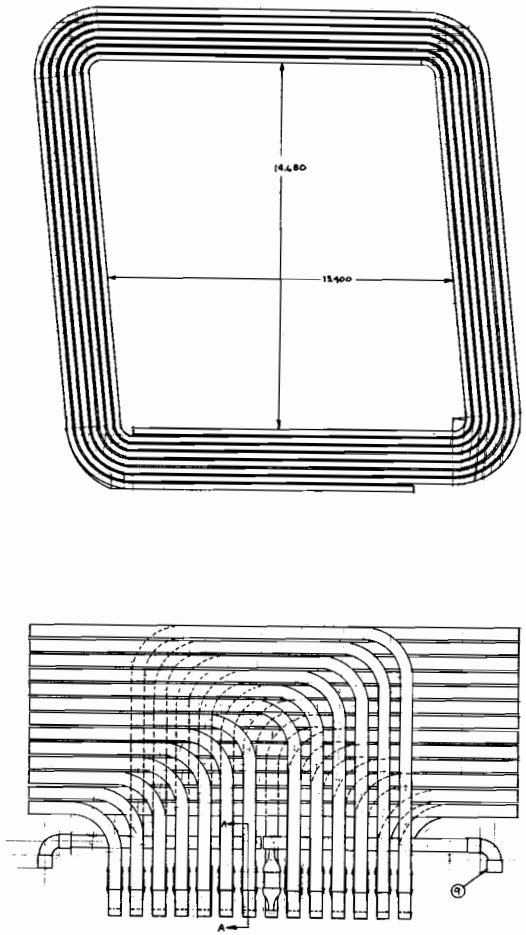


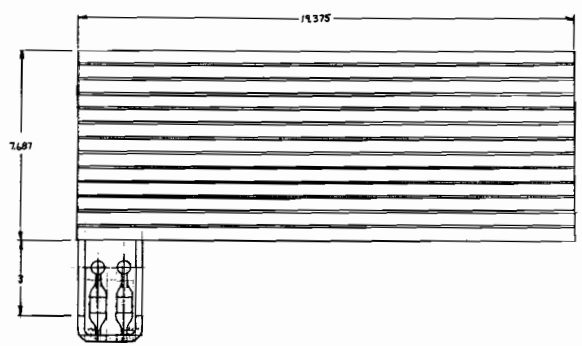


TYPICAL 590 AMP COIL

Figure 5

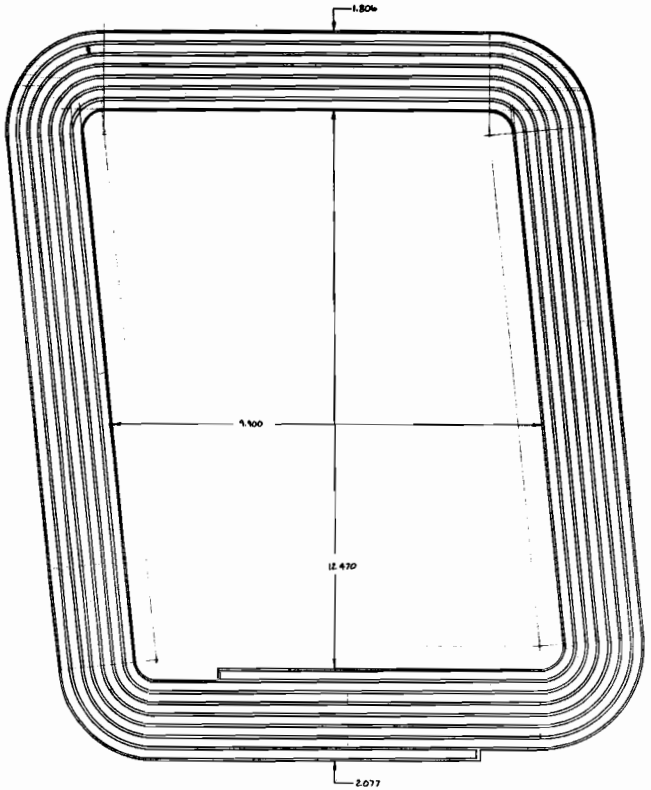


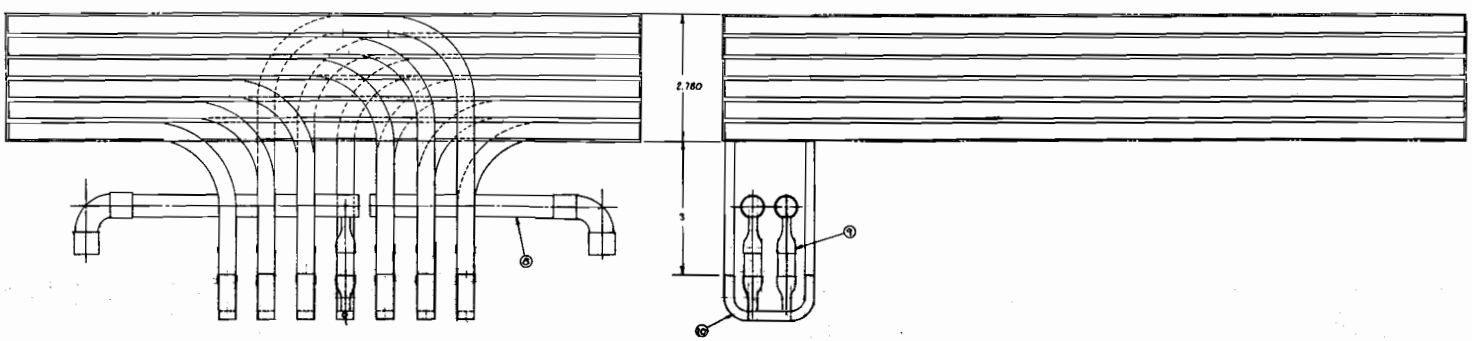


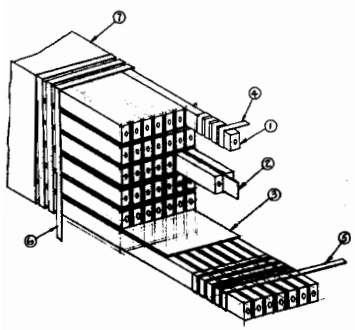

TYPICAL 290 AMP COIL

Figure 6

## TABLE III A

### EXCITATION AND COIL DESIGN OF MAGNET NO. 1

| Block | | Magnetic Induction (Gauss) | Air Gap Amp-Turns ** | Required Amp-Turns | COIL DESIGN Turns of Nominal: 590A Circuit | 290A Circuit | 50A Circuit | 10A Circuit | COIL DATA* Weight (pounds) | Power (kw) | Cooling (Gal/Min) | Temperature Rise (°C) |
|---|---|---|---|---|---|---|---|---|---|---|---|---|
| Plus Poles | P1 | 10976.1 | 63867.7 | 52680 | 91 | | | | 210.55 | 12.3 | 0.26 | 14 |
| | P2 | 5522.1 | 29549.8 | 29990 | 49 | | | | 98.63 | 6.5 | 0.27 | 13 |
| | P3 | 2778.2 | 13671.9 | 13771 | | 49 | | | 51.09 | 2.4 | 0.14 | 9 |
| | P4 | | | | | | | | | | | |
| Zero Poles | Z(1-2) | | | 1436 | | 5 | | | 3.60 | 0.2 | | |
| | Z(2-3) | | | 149 | | | | 15 | 3.76 | | | |
| | Z3 | | | 34 | | | | 3 | 0.68 | | | |
| Yoke | Y1 | | | 78 | | | | 8 | 4.00 | | | |
| | Y2 | | | 5772 | | 21 | | | 22.77 | 1.0 | | |
| | Y3 | | | 45 | | | | 5 | 1.93 | | | |
| | Y4 | | | 450 | | | 9 | | 7.32 | | | |
| | Y5 | | | -17 | | | | 2 | 0.56 | | | |
| | Y6 | | | 138 | | | | 14 | 3.84 | | | |
| | Y7 | | | | | | | | | | | |
| Back Leg | | | | 3474 | | 12 | | | 15.34 | 0.8 | | |
| | | | | | | TOTAL ----- | | | 424.07 | 23.2 | | |

* Top Magnet Halves Only

** Scaling Air Gap



3.3.3

## TABLE III B

### EXCITATION AND COIL DESIGN OF MAGNET NO. 2

| Block | | Magnetic Induction (Gauss) | Air ** Gap Amp-Turns | Required Amp-Turns | COIL DESIGN Turns of Nominal: 590A Circuit | 290A Circuit | 50A Circuit | 10A Circuit | COIL DATA* Weight (pounds) | Power (kw) | Cooling (Gal/Min) | Temperature Rise (°C) |
|---|---|---|---|---|---|---|---|---|---|---|---|---|
| Plus Poles | P1 | 12786.5 | 75799.5 | 48294 | 78 | | | | 167.43 | 11.2 | 0.30 | 11 |
| | P2 | 6432.9 | 35070.3 | 36079 | 63 | | | | 131.64 | 7.6 | 0.27 | 12 |
| | P3 | 3236.4 | 16226.0 | 16348 | | 56 | | | 55.63 | 2.8 | 0.15 | 9 |
| | P4 | 1628.2 | 7507.3 | 7552 | | 28 | | | 25.85 | 1.1 | 0.15 | 7 |
| Zero Poles | Z(1-2) | | | 3674 | | 13 | | | 7.30 | 0.4 | | |
| | Z(2-3) | | | 193 | | | | 19 | 4.73 | | | |
| | Z(3-4) | | | 61 | | | | 6 | 1.83 | | | |
| Yoke | Y1 | | | 181 | | | | 18 | 8.83 | | | |
| | Y2 | | | 4750 | | 16 | | | 16.97 | 0.9 | | |
| | Y3 | | | 102 | | | | 10 | 3.82 | | | |
| | Y4 | | | 1614 | | 6 | | | 4.59 | 0.2 | | |
| | Y5 | | | 22 | | | | 2 | 0.56 | | | |
| | Y6 | | | 505 | | | 10 | | 7.65 | | | |
| | Y8 | | | 46 | | | | 5 | 1.36 | | | |
| Back Leg | | | | 3334 | | 12 | | | 8.18 | 0.4 | | |
| | | | | | | TOTAL ----- | | | 446.37 | 24.6 | | |

* Top Magnet Halves Only
** Scaling Air Gap

3.3.3

## TABLE III C

### EXCITATION AND COIL DESIGN OF MAGNET NO. 3

| Block | | Magnetic Induction (Gauss) | Air ** Gap Amp-Turns | Re-quired Amp-Turns | COIL DESIGN Turns of Nominal: 590A Cir-cuit | 290A Cir-cuit | 50A Cir-cuit | 10A Cir-cuit | COIL DATA* Weight (pounds) | Power (kw) | Cooling (Gal/Min) | Temp-erature Rise (°C) |
|---|---|---|---|---|---|---|---|---|---|---|---|---|
| | P1 | 14895.2 | 89960.0 | | | | | | | | | |
| Plus | P2 | 7493.8 | 41622.0 | 43769 | 72 | | | | 150.13 | 9.7 | 0.31 | 10 |
| Poles | P3 | 3770.1 | 19257.3 | 19422 | | 72 | | | 73.89 | 3.2 | 0.14 | 10 |
| | P4 | 1896.8 | 8909.8 | 8959 | | 32 | | | 30.72 | 1.4 | 0.14 | 10 |
| Zero | Z(1-2) | | | 265 | | | 5 | | 3.67 | | | |
| Poles | Z(2-3) | | | 70 | | | | 7 | 1.91 | | | |
| | Z(3-4) | | | | | | | | | | | |
| | Y1 | | | 98 | | | | 10 | 4.11 | | | |
| | Y2 | | | 4325 | | 15 | | | 16.52 | 0.8 | | |
| | Y3 | | | 35 | | | | 4 | 1.31 | | | |
| Yoke | Y4 | | | 331 | | | 7 | | 6.16 | | | |
| | Y5 | | | | | | | | | | | |
| | Y6 | | | 103 | | | | 10 | 2.40 | | | |
| | Y7 | | | | | | | | | | | |
| Back Leg | | | | 2651 | | 9 | | | 10.01 | 0.5 | | |
| | | | | | | TOTAL ----- | | | 368.15 | 15.6 | | |

* Top Magnet Halves Only

** Scaling Air Gap

3.3.3

## TABLE III D

### EXCITATION AND COIL DESIGN OF MAGNET NO. 4

| Block | | Magnetic Induction (Gauss) | Air ** Gap Amp-Turns | Re-quired Amp-Turns | COIL DESIGN Turns of Nominal: 590A Cir-cuit | 290A Cir-cuit | 50A Cir-cuit | 10A Cir-cuit | COIL DATA* Weight (pounds) | Power (kw) | Cooling (Gal/Min) | Temp eratur Rise (°C) |
|---|---|---|---|---|---|---|---|---|---|---|---|---|
| | P1 | | | | | | | | | | | |
| Plus | P2 | 8729.7 | 49397.7 | 46770 | 78 | | | | 170.33 | 10.7 | 0.28 | 11 |
| Poles | P3 | 4391.9 | 22854.9 | 23113 | | 77 | | | 78.71 | 4.3 | 0.15 | 10 |
| | P4 | 2209.6 | 10574.3 | 10634 | | 40 | | | 38.83 | 1.6 | 0.14 | 9 |
| Zero | Z(2-3) | | | 444 | | | 9 | | 6.44 | | | |
| Poles | Z(3-4) | | | 81 | | | | 8 | 1.93 | | | |
| | Z4 | | | 25 | | | | 3 | 0.66 | | | |
| | Y1 | | | 114 | | | | 11 | 4.65 | | | |
| | Y2 | | | 11227 | | 42 | | | 51.88 | 2.2 | | |
| | Y3 | | | 42 | | | | 4 | 1.36 | | | |
| Yoke | Y4 | | | 430 | | | 9 | | 6.34 | | | |
| | Y5 | | | -18 | | | | 2 | 0.51 | | | |
| | Y6 | | | 175 | | | | 18 | 4.44 | | | |
| | Y7 | | | | | 7 | | | | | | |
| Back Leg | | | | 1934 | | 7 | | | 8.80 | 0.4 | | |
| | | | | | | TOTAL ----- | | | 374.88 | 19.2 | | |

*Top Magnet Halves Only

** Scaling Air Gap

3.3.3

## TABLE III E

### EXCITATION AND COIL DESIGN OF MAGNET NO. 5

| Block | | Magnetic Induction (Gauss) | Air ** Gap Amp-Turns | Re-quired Amp-Turns | COIL DESIGN Turns of Nominal: 590A Cir-cuit | 290A Cir-cuit | 50A Cir-cuit | 10A Cir-cuit | COIL DATA* Weight (pounds) | Power (kw) | Cooling (Gal/Min) | Temperature Rise (°C) |
|---|---|---|---|---|---|---|---|---|---|---|---|---|
| Plus Poles | P2 | 10169.5 | 58626.0 | 50850 | 91 | | | | 179.87 | 9.8 | 0.29 | 10 |
| | P3 | 5116.3 | 27124.6 | 27553 | 48 | | | | 92.99 | 5.4 | 0.29 | 10 |
| | P4 | 2574.0 | 12549.8 | 12630 | | 42 | | | 41.01 | 2.2 | 0.14 | 10 |
| | P5 | 1295.0 | 5806.4 | 6071 | | 21 | | | 16.80 | 0.8 | 0.15 | 7 |
| Zero Poles | Z(2-3) | | | 994 | | | 20 | | 14.81 | | | |
| | Z(3-4) | | | 117 | | | | 12 | 2.95 | | | |
| | Z(4-5) | | | 44 | | | | 4 | 0.91 | | | |
| Yoke | Y1 | | | 127 | | | | 13 | 5.24 | | | |
| | Y2 | | | 7342 | | 25 | | | 27.97 | 1.4 | | |
| | Y3 | | | 72 | | | | 7 | 2.69 | | | |
| | Y4 | | | 403 | | | 8 | | 6.44 | | | |
| | Y5 | | | 19 | | | | 2 | 0.54 | | | |
| | Y6 | | | 202 | | | 4 | | 3.04 | | | |
| | Y8 | | | 18 | | | | 2 | 0.50 | | | |
| Back Leg | | | | 4329 | | 15 | | | 19.80 | 1.0 | | |
| | | | | | | TOTAL ----- | | | 415.56 | 20.6 | | |

*Top Magnet Halves Only

** Scaling Air Gap

3.3.3

## TABLE III F

### EXCITATION AND COIL DESIGN OF MAGNET NO. 6

| Block | | Magnetic Induction (Gauss) | Air** Gap Amp-Turns | Re-quired Amp-Turns | COIL DESIGN Turns of Nominal: 590A Cir-cuit | 290A Cir-cuit | 50A Cir-cuit | 10A Cir-cuit | COIL DATA* Weight (pounds) | Power (kw) | Cooling (Gal/Min) | Temperature Rise (°C) |
|---|---|---|---|---|---|---|---|---|---|---|---|---|
| Plus Poles | P2 | 11846.7 | 69578.3 | 52743 | 91 | | | | 211.23 | 12.4 | 0.26 | 14 |
| | P3 | 5960.1 | 32191.9 | 32937 | 56 | | | | 114.37 | 6.9 | 0.27 | 12 |
| | P4 | 2998.5 | 14894.3 | 14999 | | 49 | | | 49.45 | 2.8 | 0.15 | 10 |
| | P5 | 1508.6 | 6891.2 | 6966 | | 24 | | | 19.33 | 1.0 | 0.14 | 9 |
| Zero Poles | Z(2-3) | | | 2009 | | 7 | | | 4.79 | 0.3 | | |
| | Z(3-4) | | | 143 | | | | 14 | 3.53 | | | |
| | Z(4-5) | | | 54 | | | | 5 | 1.16 | | | |
| Yoke | Y1 | | | 164 | | | | 16 | 8.10 | | | |
| | Y2 | | | 5064 | | 20 | | | 11.95 | 0.5 | | |
| | Y3 | | | 86 | | | | 9 | 3.47 | | | |
| | Y4 | | | 938 | | | 18 | | 15.16 | | | |
| | Y5 | | | 21 | | | | 2 | 0.64 | | | |
| | Y6 | | | 368 | | | 7 | | 5.36 | | | |
| | Y8 | | | 306 | | | 6 | | 4.44 | | | |
| Back Leg | | | | 3322 | | 12 | | | 8.27 | 0.4 | | |
| | | | | | | TOTAL ----- | | | 461.25 | 24.3 | | |

*Top Magnet Halves Only

**Scaling Air Gap

3.3.3

## TABLE III G

### EXCITATION AND COIL DESIGN OF MAGNET NO. 7

| Block | | Magnetic Induction (Gauss) | Air** Gap Amp-Turns | Required Amp-Turns | COIL DESIGN Turns of Nominal: 590A Circuit | 290A Circuit | 50A Circuit | 10A Circuit | COIL DATA* Weight (pounds) | Power (kw) | Cooling (Gal/Min) | Temperature Rise (°C) |
|---|---|---|---|---|---|---|---|---|---|---|---|---|
| Plus Poles | P2 | 13800.6 | 82576.7 | 46370 | 78 | | | | 156.57 | 9.7 | 0.31 | 9 |
| | P3 | 6943.1 | 38205.9 | 39805 | 70 | | | | 145.21 | 8.2 | 0.28 | 11 |
| | P4 | 3493.1 | 17676.8 | 17814 | | 64 | | | 65.16 | 3.0 | 0.13 | 11 |
| | P5 | 1757.4 | 8178.6 | 8226 | | 28 | | | 26.19 | 1.4 | 0.14 | 9 |
| Zero Poles | Z(2-3) | | | 7167 | | 24 | | | 17.91 | 1.0 | | |
| | Z(3-4) | | | 202 | | | 4 | | 2.85 | | | |
| | Z(4-5) | | | 65 | | | | 6 | 1.40 | | | |
| Yoke | Y1 | | | 227 | | | 5 | | 6.72 | | | |
| | Y2 | | | 4861 | | 16 | | | 17.73 | 0.9 | | |
| | Y3 | | | 162 | | | | 16 | 6.10 | | | |
| | Y4 | | | 6441 | | 21 | | | 16.50 | 1.0 | | |
| | Y5 | | | 28 | | | | 3 | 0.81 | | | |
| | Y6 | | | 2930 | | | | 10 | 7.26 | 0.4 | | |
| | Y8 | | | 68 | | | | 7 | 1.78 | | | |
| Back Leg | | | | 3525 | | 12 | | | 15.63 | 0.8 | | |
| | | | | | | TOTAL ----- | | | 487.82 | 26.4 | | |

* Top Magnet Halves Only

**Scaling Air Gap

3.3.3

## TABLE III H

### EXCITATION AND COIL DESIGN OF MAGNET NO. 8

| Block | | Magnetic Induction (Gauss) | Air** Gap Amp-Turns | Re-quired Amp-Turns | COIL DESIGN Turns of Nominal: 590A Cir-cuit | 290A Cir-cuit | 50A Cir-cuit | 10A Cir-cuit | COIL DATA* Weight (pounds) | Power (kw) | Cooling (Gal/Min) | Temperature Rise (°C) |
|---|---|---|---|---|---|---|---|---|---|---|---|---|
| | P2 | | | | | | | | | | | |
| Plus | P3 | 8088.2 | 45343.5 | 44952 | 78 | | | | 166.94 | 9.7 | 0.28 | 10 |
| Poles | P4 | 4069.2 | 20979.1 | 21188 | | 70 | | | 71.34 | 3.9 | 0.15 | 10 |
| | P5 | 2047.2 | 9706.4 | 9760 | | 35 | | | 33.19 | 1.5 | 0.15 | 8 |
| Zero | Z(3-4) | | | 329 | | | 7 | | 5.07 | | | |
| Poles | Z(4-5) | | | 77 | | | | 8 | 1.89 | | | |
| | Z5 | | | | | | | | | | | |
| | Y1 | | | 86 | | | | 9 | 3.80 | | | |
| | Y2 | | | 5753 | | 21 | | | 19.92 | 0.9 | | |
| | Y3 | | | 34 | | | | 4 | 1.32 | | | |
| Yoke | Y4 | | | 305 | | | 6 | | 4.23 | | | |
| | Y5 | | | | | | | | | | | |
| | Y6 | | | 142 | | | 3 | | 2.05 | | | |
| | Y7 | | | | | | | | | | | |
| Back Leg | | | | 968 | | | 19 | | 26.74 | (0.04) | | |
| | | | | | | TOTAL ----- | | | 336.49 | 16.0 | | |

* Top Magnet Halves Only

**Scaling Air Gap

3.3.3

## TABLE III I

### EXCITATION AND COIL DESIGN OF MAGNET NO. 9

| Block | | Magnetic Induction (Gauss) | Air** Gap Amp-Turns | Required Amp-Turns | COIL DESIGN Turns of Nominal: 590A Circuit | 290A Circuit | 50A Circuit | 10A Circuit | COIL DATA* Weight (pounds) | Power (kw) | Cooling (Gal/Min) | Temperature Rise (°C) |
|---|---|---|---|---|---|---|---|---|---|---|---|---|
| | P2 | | | | | | | | | | | |
| Plus | P3 | 9422.1 | 53814.4 | 49969 | 84 | | | | 190.49 | 11.8 | 0.27 | 14 |
| Poles | P4 | 4740.3 | 24898.4 | 25217 | | 84 | | | 83.73 | 4.5 | 0.14 | 10 |
| | P5 | 2384.9 | 11519.8 | 11589 | | 48 | | | 39.21 | 2.0 | 0.14 | 11 |
| Zero | Z(3-4) | | | 630 | | | 12 | | 9.26 | | | |
| Poles | Z(4-5) | | | 97 | | | | 10 | 2.44 | | | |
| | Z5 | | | 26 | | | | 3 | 0.68 | | | |
| | Y1 | | | 102 | | | | 10 | 4.50 | | | |
| | Y2 | | | 9822 | | 35 | | | 34.90 | 1.6 | | |
| | Y3 | | | 38 | | | | 4 | 1.41 | | | |
| Yoke | Y4 | | | 394 | | | 8 | | 6.09 | | | |
| | Y5 | | | -17 | | | | 2 | 0.53 | | | |
| | Y6 | | | 130 | | | | 13 | 3.33 | | | |
| | Y7 | | | | | | | | | | | |
| Back Leg | | | | 6290 | | 22 | | | 27.35 | 1.3 | | |
| | | | | | | TOTAL ----- | | | 403.92 | 21.2 | | |

* Top Magnet Halves Only

**Scaling Air Gap

3.3.3

reluctance effects are less than 25% of the air gap excitations, giving excitation uncertainties of $\pm .20 \times .25 = \pm 5\%$.

Because of this uncertainty in the actual excitations to be applied to the magnet, it is of interest to consider the use of current shunts. Each excitation can then be designed to give the circuit theory value and then adjusted to give the correct field distribution. A study of current shunts for this purpose has been underway for some time at MURA and has included the use of such shunts on our scale model spiral sector magnets. The results as regard the stability of any given current setting seems sufficiently promising that this method is proposed as a reliable method for obtaining $\pm$ 10 per cent excitation adjustments.

In order to obtain the excitation of each magnet, three computer programs were employed. First the magnetostatic fields were found assuming infinite permeability for the iron from the UNICYL program. Secondly the fluxes flowing from the plus poles to the median plane and to the adjacent zero poles, as given by UNICYL, were used to determine what excitations were necessary to force the required flux through the iron configuration with a specified normal induction curve. These excitations given by the EXCEL program were then converted to appropriate coil designs by the COILFINDER program.

The results of the coil design are given in Tables III-A to III-I. The parts of the magnet that receive coil windings are labeled, for example,

P1 for the first sector plus pole, Z(1-2) for the zero pole excitation between the first and second sector plus pole. The windings around the magnet yoke are designated, for example, Y1 meaning that this is the first yoke coil on the high flux side of the highest flux plus pole; Y2 would then be the winding on the low flux side of the highest flux plus pole, etc. The field required under the center of each plus pole as well as the infinite permeability excitations are also listed. The next column gives the results of the EXCEL calculation. The remainder of the table results from the COILFINDER program.

The total coil weight of the copper coils together with the power and cooling requirements is shown in Table IV. This power is exclusive of the power taken by the current adjusting shunts. If the shunt power is estimated at 10 per cent of the total coil power, the magnet power required by the 500 Mev FFAG accelerator is approximately 3.5 megawatts. The total weight of the copper coils is about 27 tons.

TABLE IV

COIL WEIGHT, POWER AND COOLING

| | Coil Weight (Tons) | Power (Kilowatts) | Cooling Water Flow (gal./min.) |
|---|---|---|---|
| 590 Ampere | 16 | 2110 | 709 |
| 290 Ampere | 9 | 960 | 383 |
| Total | 22 | 3070 | 1092 |

3.3.4 FIELD TERMINATION. At $R_{max}$, the maximum good field radius (273 inches), the field is required to have the correct value and gradient within the tolerances of Section 3.2.2. It is necessary to carry the poles to larger radii than $R_{max}$ to make the field good at this radius. Each magnet block presents a different termination problem and must be treated separately. In general a surface of constant magnetomotance is chosen such that the envelope of the various surfaces for each block presents adequate room for the vacuum chamber. For most magnets that are to be shaped the potential is chosen to be 51,569 gilberts or 41,038 ampere turns. For those shaped positive poles which are of a radius sufficiently high to require efficient termination in order to conserve flux, a rough cut-off guide is employed. This states that the field will be accurate within 2 per cent at a distance of one-half gap in from an abruptly terminated magnet. We have in fact doubled this distance to where the rule states that the field will be accurate to within .1 per cent. At this point the pole is beveled back at 45 degrees to a distance that gives a pole base sufficiently wide to reduce the flux density in the pole below 19 kilogauss. Further termination shaping in the form of a parameterized bump will be employed if this proves to be necessary.

3.3.5 SPECIAL MAGNETS. The extraction of the beam will be accomplished by a kicker magnet in the straight section between Blocks 1 and 2 and a deflector in the neutral pole of Blocks 7 and 8. A gap of 2.25 inches must be made available in the region of the median plane in return

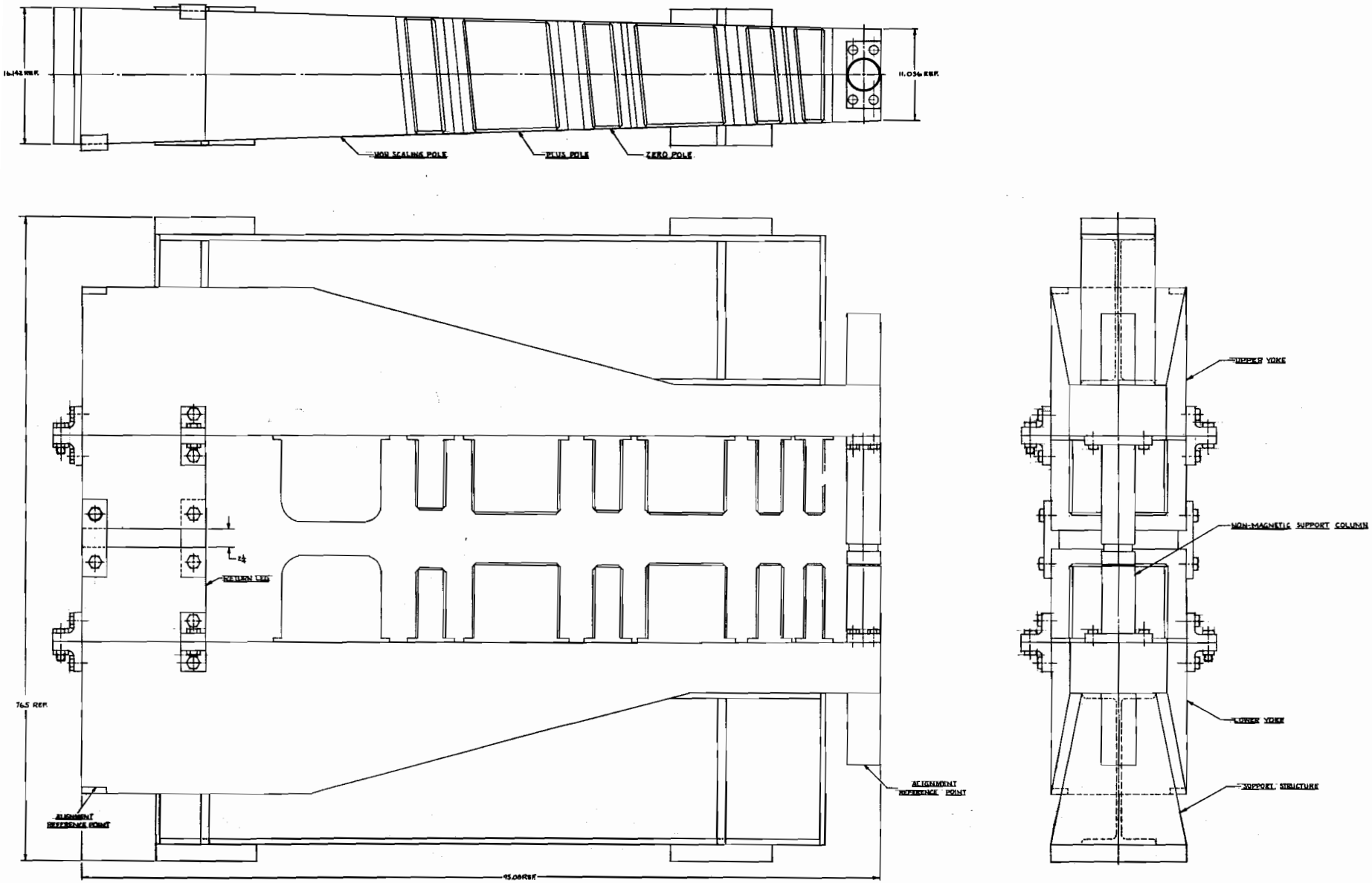


SPECIAL MAGNET BLOCK
Figure 7

flux leg of Block 9. The modified Block 9 is shown in Fig. 7.

3. 3. 6 MAGNET POWER SUPPLY AND COOLING. The nominal 590 ampere plus 10% shunt current or 650 ampere supply will utilize 8 separate power units, each capable of delivering 700 amperes at 600 volts isolated from ground. All nominal 590 ampere coils and power units will be connected in series, with a virtual ground every 4-1/2 magnets. The power unit terminals will then be at ± 230 volts when delivering 650 amperes.

When maintenance is to be performed on one power unit, there is enough reserve capacity so that it can be shunted out. This will change the voltage pattern somewhat and increase the magnet section voltage to ± 260 volts, with a ground existing at the center of the superperiod whose power unit is shunted out.

Each magnet group (a superperiod) fed by one power unit will have overvoltage detection and protection devices, which will short out the magnets and remove the power units if the voltage becomes excessive. Other faults, undervoltage, water failure, temperature, etc., will be provided for. Each power unit will be regulated to better than .01 per cent as required in Section 3. 2. 2.

The nominal 290 ampere plus 10% shunt current or 320 ampere supply will utilize 8 separate power units capable of delivering 375 amperes at 530 volts isolated from ground. All nominal 290 ampere coils and power units will be connected in series, with a virtual ground every 4-1/2 magnets. The power unit terminals will then be at ± 205 volts when delivering 320 amperes. Similar protection and maintenance devices will be available on

the nominal 290 ampere power units. Regulation will be provided to maintain .01 per cent stability.

The nominal 50 ampere and 10 ampere units will be provided with the necessary regulation of .01 per cent.

The cooling system is designed to keep conductor temperature close to ambient ($80^{\circ}$ F), which aids reliability of the magnetic system. A $10^{\circ}$ C ($18^{\circ}$ F) water temperature rise from $71^{\circ}$ F to $89^{\circ}$ F is allowed in the magnet cooling water, which is a closed system of parallel circuits. The cooling requirements are roughly 1000 gallons per minute.

3.3.7 MAGNETIC FIELD MEASUREMENTS. The status of magnetic field measurement on FFAG magnets remains the same as reported in our 12.5 Bev proposal except for the median plane location.

In this connection two rotating coil systems, each driven from the same 70 cycle per second supply, have been phase locked together such that it is possible to measure very accurately the ratio of the two voltages developed. The ratio is measured by a Complex Ratio Bridge which records the in-phase and quadrature components of the voltage ratio. Having set the relative mechanical rotation of the two systems to zero quadrature in a standard magnet, one system can be translated to the fringe field of the magnet where motion off the median plane results in a quadrature reading proportion to the distance from the median plane. Reproducibility of readings indicates that .001 inch can be detected. Further development will include a leveling system to permit installation of one of the rotating systems in the FFAG magnet after calibration in the standard magnet.

3.3.8 MAGNET SUPPORT AND ALIGNMENT. No difficulty is contemplated in the alignment and stability of the magnet structure in meeting the tolerances mentioned in Section 3.2.2.

## 3.4 VACUUM SYSTEM

3.4.1 VACUUM ENVELOPE. The vacuum chamber will be constructed in 24 sections, each section spanning three magnet blocks (Fig. 8). The chamber proper will be constructed of 3/8 inch nitrogen stabilized stainless-steel plate (e.g., Allegheny-Ludlum Type 205 or U. S. Steel Tenelon); cold working and welding do not increase the magnetic permeability of this material beyond $\mu = 1.004$ which is within tolerances. This stainless steel offers a good combination of low permeability, weldability, good vacuum properties and high annealed yield strength.

The vacuum chamber will extend radially from 216 inches to 276 inches, a span of 60 inches. In some segments the span will be reduced to 57 inches to allow room for the field termination poles. In Magnet Blocks 2 and 6, the chamber will extend to 280 inches to allow space for internal ion pumping elements. A single segment of the vacuum tube weighs approximately 510 pounds. In order to provide space for the radio frequency accelerating system, the chamber cross section will closely approximate the magnet gap profile. The height of the chamber will be 4.53 inches at the inner radius and about 2.80 inches at the outer radius. The chamber will be welded together with flexible joints.

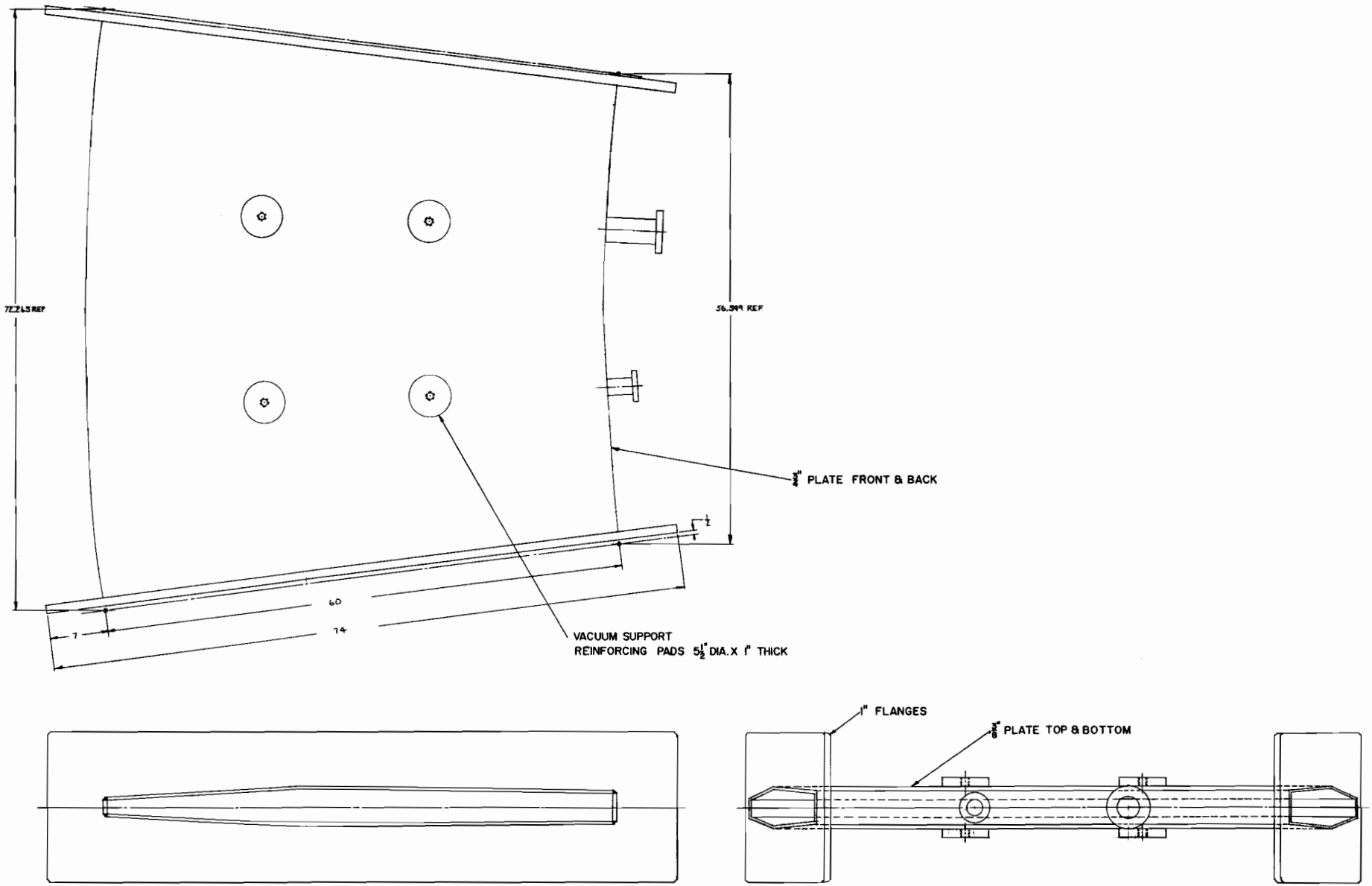


TYPICAL VACUUM CHAMBER

Figure 8

The vacuum chamber will not support the load of atmospheric pressure by itself. It is supported externally by vertical rods passing through ~~holes in the poles~~ the radial straight sections of the magnets. The load is taken by upper and lower support beams, the outer end bearing on the vertical return leg of the magnet yoke and the inner end bearing on extensions of the magnet support brace or nose block. Thus the vacuum load is not taken by the magnet yokes.

The support rods are located in the radial straight sections. With this support, the chamber wall between supports will deflect approximately 1/8 inch.

The maximum stresses occur in the chamber at the positions of the pads to which the support rods attach. The design stress is 40,000 p.s.i., whereas stainless steel of this type has a yield stress of 75,000 - 80,000 p.s.i. A typical superperiod is shown in Fig. 9.

3.4.2 PUMPING SYSTEM. The total system volume is $5 \times 10^3$ liters and the total surface area is $6 \times 10^5$ $cm^2$.

The rough pumping will be accomplished conventionally with mechanical pumps and blowers, all with liquid nitrogen-cooled traps. This pumping system will bring the pressure down to $10^{-3}$ torr in two hours, at which time the getter-ion pumps can be started. After the system is roughed, all mechanical pumps and blowers will be removed.

The high vacuum system will consist of 16 sets of internal getter-ion pumping elements mounted in the fringe magnetic field of Magnet Blocks 2 and 6. Each set of elements will provide a pumping speed in excess of 500 liters/sec. In addition, 4 commercial 500 liter/sec getter-ion

pumps will be provided for use in case of magnet power failure. The total pumping speed of 10,000 liters per second will provide a system time constant of less than 1/2 second and a maximum throughput of about one torr-liter per second.

Degreased and acid-cleaned Type 205 stainless-steel has a short term outgassing rate of about $10^{-9}$ torr-liters/cm$^2$ - sec without baking. A pressure of $10^{-6}$ torr, which is adequate for operation of the accelerator, can thus be achieved in a few hours without baking. Continuous pumping for several days will give pressures in the $10^{-7}$ torr range.

## 3.5 INJECTION SYSTEM

3.5.1 GENERAL DESCRIPTION. The injection system consists of a Cockroft-Walton preinjector, a buncher, a 20 Mev linear accelerator, a beam transport system and an inflector magnet. The performance parameters of the injection system are given in Table V. To achieve the design intensity of $10^{14}$ particles per second, we inject 10 turns of a 24 milliampere linac beam into the FFAG accelerator at a repetition rate of 120 times per second. The total circulating current in the FFAG is .23 ampere. The admittance and space charge limits of the main ring were discussed in Section 3.2.3.

3.5.2 ION SOURCE, PREINJECTOR AND BUNCHER. Commercially available Cockroft-Walton accelerators for the currents of interest are practical and will not be discussed further except to note that the 50 ma requirement in Table V is much more than the 24 ma needed. This high

## TABLE V

## PERFORMANCE PARAMETERS OF INJECTION SYSTEM

| | |
|---|---|
| **PREINJECTOR:** Cockroft-Walton | |
| Energy | 750 kv |
| Source | Duoplasmatron |
| Source Output Current | |
| (total unanalyzed) | 110 ma |
| ($H^+$ only) | 90 ma |
| Emittance at 750 kv | 6 $\pi$ millirad-cm |
| Output Energy Spread | $\pm$ .1 per cent |
| **BUNCHER** | |
| Output Energy Spread | $\pm$ 2 per cent |
| Output Current | 80 ma |
| **LINEAR ACCELERATOR** | |
| Energy | 20 Mev |
| Input Current in Linac | |
| (Synchrotron Phase Acceptance) | 50 ma |
| Transverse Phase Space Acceptance | 10 $\pi$ millirad-cm |
| Output Current | 50 ma |
| Output Energy Spread | $\pm$ .25 per cent |
| Output Emittance | 1.65 $\pi$ millirad-cm |
| Repetition Rate | 120 cycles/sec. |
| Particle Acceleration Pulse Length | 60 $\mu$ sec. |
| Duty Factor (including tank build-up time) | 3.0 per cent |
| Peak R. F. Power | 1.8 Mw |
| Maximum Average R. F. Power | 54 kw |

current is specified since it may be possible to use space charge spreading of the beam to expand the beam size vertically and thereby eliminate the need for off axis injection.

The buncher is a radio frequency cavity, similar in construction to a short linac section, positioned a distance of 1.5 meters from the low energy end of the linac. The cavity is excited at the linac frequency to a peak rf voltage of 15 kv. It introduces a ± 15 kv energy spread in the beam. The higher energy particles overtake the lower energy particles, thereby bunching the beam.

3.5.3 LINEAR ACCELERATOR. The linear accelerator is an Alvarez standing wave type with quadrupole focusing. Since the required energy of 20 Mev is well below that produced by Brookhaven and Argonne no especially new problems are expected. Only one linac tank will be employed. The MESSYMESH program developed at MURA in connection with the 200 Mev linac design yields the design parameters shown in Table VI.

The high vacuum system of the linear accelerator will utilize getter-ion vacuum pumps which will be attached to the bottom of the tank.

3.5.4 BEAM TRANSPORT SYSTEM. The beam transport system required is essentially the same as that discussed in our 12.5 Bev proposal since the injection system will not fit inside the magnet ring. The quadrupoles, however, are only required to handle 20 Mev protons. This system will be designed using the MURA Beam Transport Program.

3.5.5 MULTITURN INJECTION SYSTEM. It is required to inject 10 turns of a 24 milliampere beam to reach the design intensity.

## TABLE VI

## LINEAR ACCELERATOR PARAMETERS

| | |
|---|---|
| Energy Range | .75 - 20 Mev |
| Acceleration Rate | 1.2 Mv/m |
| Tank Length | 16 m |
| Tank Diameter | .94 m |
| Approximate Drift Tube Diameter | 18 cm |
| Drift Tube Aperture Diameter | 2 cm |
| Drift Tube Radius of Curvature | 2 cm |
| Average Shunt Impedance (including transit time) | 45 Megohms/m |
| Cavity RF Losses (including stems, tuners, etc.) | .83 Mw |
| Tank Resonant Frequency | 200 Mc/sec |
| Stable Phase Angle | $64^{\circ}$ |
| Total Accelerating Length | 16 m |
| Total RF Peak Power Required (with beam loading) | 1.8 Mw |
| Average Total R. F. Power (at 3.0 per cent duty factor) | 54 kw |
| Number of Drift Tubes | 85 |
| Maximum Field Strength at Any Point Less Than | 15 Mv/m |

The multiturn injection system consists of a set of field bump magnets which, when fully excited, move the injection equilibrium orbit radially inward to the position of the inflector. The bump excitation is programmed so that the equilibrium orbit moves away from the inflector as the bump is decreased over several turns. If the orbit movement is slow, particles will follow the orbit movement and will miss the inflector septum on later turns. Particles injected later will have larger betatron oscillation amplitudes. Properly chosen betatron oscillation frequencies can aid the operation of the system; if $\nu_x$ differs from an integer by .25, it will require 4 turns before the beam must be displaced by its total size, and the programmed bump can be turned off four times more slowly.

With the single turn amplitude of $a_x = .21''$ and a radial septum width of .04", the orbit must move 2 x .21 + .04 = .46" in four turns to miss the septum. Then particles injected at the end of 10 turns will have radial amplitudes of 1.15". We will utilize two field bump magnets placed within the vacuum chamber. Each magnet must provide 10.7 kg-cm in order to change the amplitude 1.15". The turn off time required is 6 microseconds.

## 3.6 RF ACCELERATING SYSTEM

3.6.1 ACCELERATION CYCLE. The kinetic energies, average radii and revolution frequencies of protons in this accelerator are given in Table VII. Four drift tubes are used to apply the radio frequency accelerating voltages to the protons. Figure 9 shows one drift tube placed in two superperiods. Each drift tube is 60 electrical degrees in length thus allowing the peak effective accelerating voltage to just equal the peak rf voltage applied to the drift tube.

Operation at such a low harmonic number is advantageous for two reasons. First, since a bunch of particles will occupy somewhat less than 180 degrees of azimuth, the rise time of the "kicker" field may be as large as 95 nanoseconds without loss of extracted beam. Secondly, in this frequency range relatively inexpensive ferrite materials for example, Allen-Bradley Type RO-2, exhibit reasonably high $\mu$ Qf products.

3.6.2 RF SYSTEM DESIGN. The capacity of the drift tube is resonated with an external ferrite cored inductor. Variation of the incremental permeability of the ferrite over a range of 9.3:1 permits the frequency to cover the range shown in Table VII. Details of one such inductor may be seen in Fig. 10. It will be noted that the inductor is actually four inductors connected in parallel. This arrangement results from the high capacity of the drift tubes and from the fact

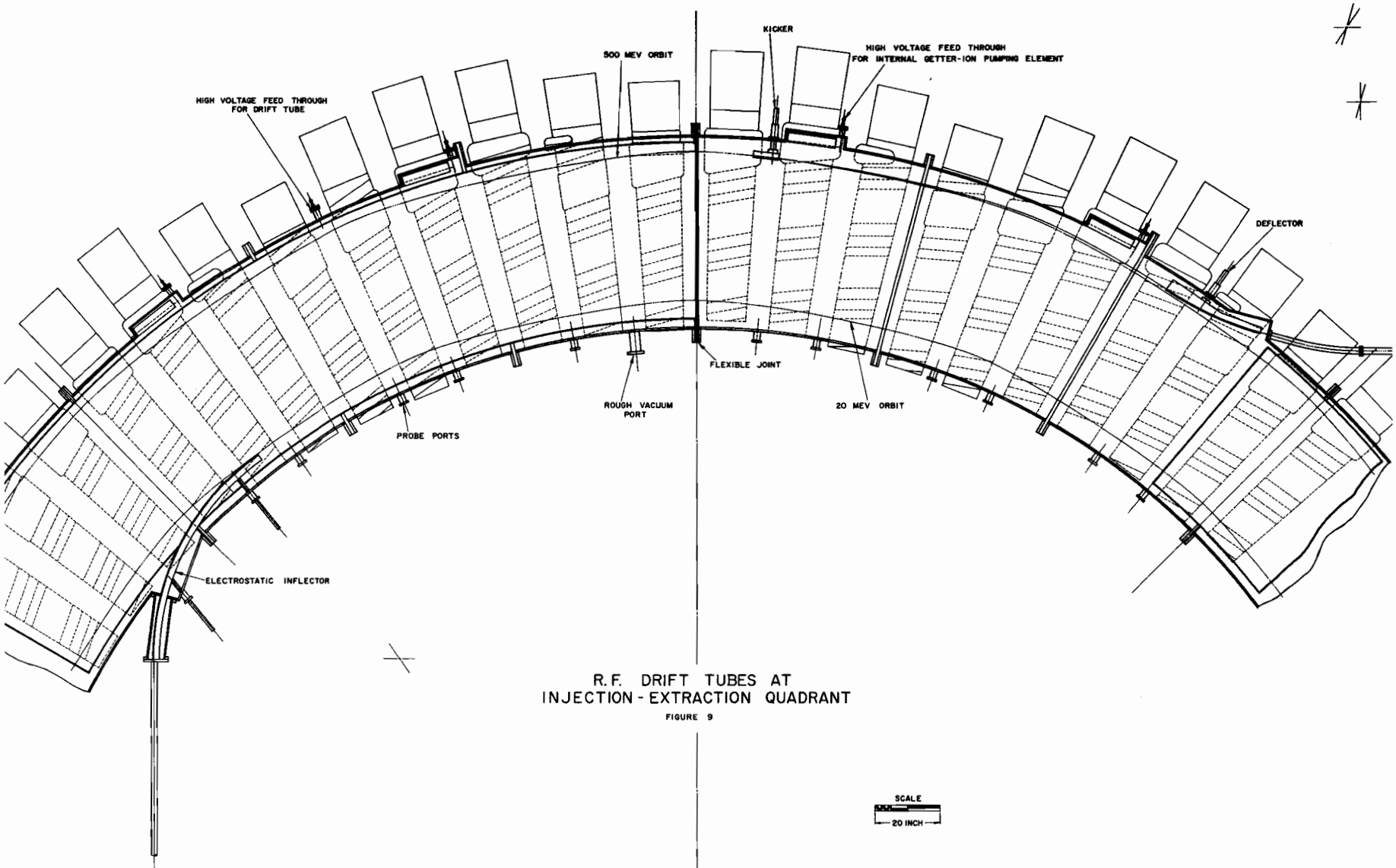


R.F. DRIFT TUBES AT
INJECTION - EXTRACTION QUADRANT

FIGURE 9

SCALE
20 INCH

TABLE VII

ACCELERATION PARAMETERS

| Kinetic Energy (Mev) | Average Radius (meters) | Revolution Frequency Megacycles per second |
|---|---|---|
| 20 | 5.687 | 1.705 |
| 30 | 5.816 | 2.027 |
| 40 | 5.909 | 2.285 |
| 60 | 6.044 | 2.696 |
| 80 | 6.143 | 3.018 |
| 100 | 6.221 | 3.284 |
| 200 | 6.477 | 4.171 |
| 400 | 6.759 | 5.033 |
| 500 | 6.858 | 5.273 |

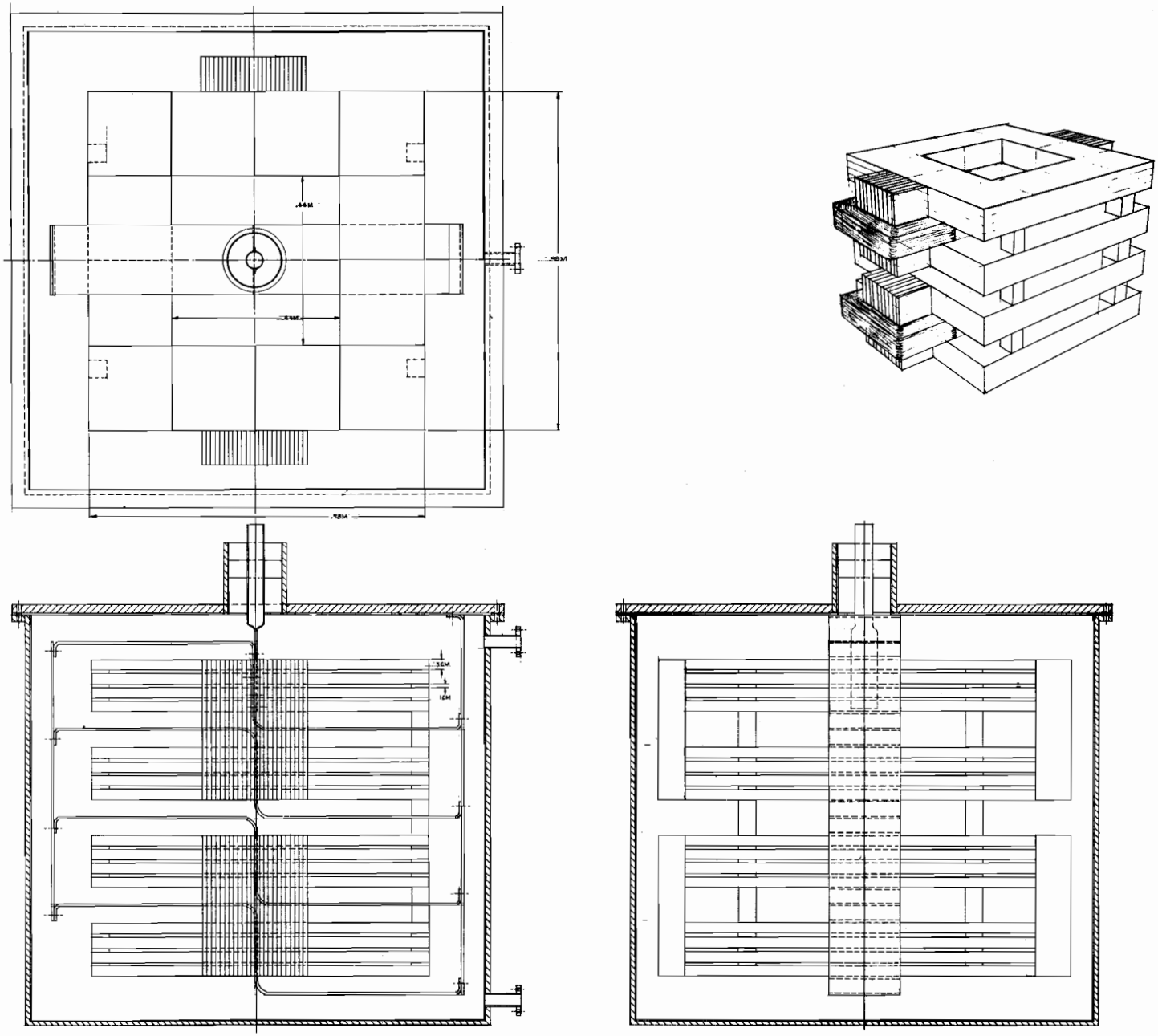


TUNING INDUCT

Figure 10

that the high rf voltage requires a large cross sectional area for the rf flux path.

The four drift tubes are operated with a 90 degree phase displacement between successive tubes. A preprogrammed master oscillator performs the necessary frequency modulation at the required 120 cycle per second rate. The parameters of the rf accelerating system are given in Table VIII and the parameters of the drift tubes in Table IX. Table X lists the parameters for the ferrite tuning inductor.

## TABLE VIII

### PARAMETERS OF R. F. ACCELERATING SYSTEM

| | |
|---|---|
| Initial Energy (Mev) | 20 |
| Final Energy (Mev) | 500 |
| Harmonic Number | 1 |
| Initial Frequency (Mc/sec) | 1.705 |
| Final Frequency (Mc/sec) | 5.273 |
| Ratio of Final to Initial Frequency | 3.093 |
| Acceleration Time (seconds) | .010 |
| Equilibrium Voltage Gain Per Turn (kv) | 19.5 |
| $\Gamma$ = Sin $\phi_s$ at injection* | .5 |
| Peak Voltage per Accelerating Gap (kv) | 13.8 |
| Number of Accelerating Gaps | 4 |
| Accelerating Bucket Area at Beam Capture (volt-sec), $\Gamma$ as above | 2.50 |
| Area Occupied by Beam (volt-sec) | .18 |
| Average Power Input per Power Amplifier (kw) | 80 |
| Average Power Input per Drift Tube (kw)** | 40 |
| Total Power to R. F. System (kw) | 320 |

* $\Gamma$ to be increased rapidly to .7
** Includes beam power

## TABLE IX

### DRIFT TUBE PARAMETERS

| | | |
|---|---|---|
| $L$ (azimuthal length at $R_o$ - $60^o$ sector) | 7.18 | met |
| $R_2$ | 7.00 | met |
| $R_1$ | 5.46 | met |
| $\Delta R$ | 1.54 | met |
| d (average drift tube - vacuum tube separation) | 1.94 | cm |
| A (area of single drift tube) | 20.00 | $met^2$ |
| C (capacitance of single drift tube) | .00912 | uf |
| $Z_o$ | 9.8 | ohms |
| I (peak) circulating | 998 | amps |

## TABLE X

## FERRITE+ TUNING PARAMETERS

Data are given for one drift tube tuning inductor

| | | |
|---|---|---|
| Effective $\mu$ (initial | 100 | |
| Effective $\mu$ (final) | 10.8 | |
| $B_{rf}$ (initial) | 100 | gauss |
| $B_{rf}$ (final) | 32.3 | gauss |
| Ferrite Power Loss (initial) | 25.5 | kw |
| Ferrite Power Loss (final) | 25.5 | kw |
| Volume of Ferrite | .13 | $met^3$ |

+ Ferrite Used is Allen-Bradley RO-2

## 3.7 BEAM EXTRACTION SYSTEM

3.7.1 KICKER MAGNET. Only single turn extraction is considered for this accelerator. The "kicker" magnet is a magnet through which the beam rides on its final equlibrium orbit. It is turned on in the relatively short time of one-half a revolution at the final frequency or in about 95 nanoseconds. One-fourth of a wavelength later, the oscillation will reach its maximum and can clear the septum of a "deflector" magnet.

The kicker must have an aperture large enough to accommodate the final beam, must impart a radial momentum kick to the beam large enough to induce a betatron amplitude larger than the sum of the radial beam width (1.00") and the deflector septum thickness (.08"), and must have a rise time of about 95 nanoseconds. Thus a kicker strength of

$$\frac{1.08 \times 3.211 \times 3636}{270} = 47 \text{ kg-cm must be used.}$$

If the length of the kicker is 8 inches, its aperture 2 inches and its height 4 inches, about 20,000 amperes are required.

3.7.2 DEFLECTOR MAGNET. The deflector magnet is planned as a laminated iron 4-turn magnet similar to that built at CERN. It will have an aperture of 2.0 inches by 1.0 inch, a field of 10 kg, and will be 30 inches long. The magnet will resonate with an energy storage capacitor at a frequency of 1 kc/sec, with a peak voltage of 1 kv and a peak current of 5000 amps. The peak field energy storage is 400 joules. This is excited 120 times per second giving a 5 kilowatt average power if a

Q of 10 is assumed. The resonating capacitor must have a capacitance of about 1500 $\mu$ farads.

## 3.8 RADIATION PROBLEMS

3.8.1 SHIELDING REQUIREMENTS. Since the accelerator is intended only as an injector for a larger energy accelerator no experimental area shielding is planned. On the assumption that there is a steady loss of 10 per cent of the beam, it is estimated that 16 feet of earth be used in the side walls and roof of the building to reduce the dose rate to less than 2.5 milliroentgen per hour. If a beam stop is desired for accelerator monitoring then 25 feet of ordinary concrete ( $\rho$ = 2.4) must be used to achieve the same reduction to 2.5 mr/hr. Table XI gives all the pertinent information.

## 3.9 PHYSICAL PLANT

3.9.1 PHYSICAL PLANT. A reasonable physical layout for the 500 Mev injector accelerator is shown in Figs. 11 and 12. Table XII tabulates the structures included in the physical plant.

## TABLE XI

### SHIELDING DATA FOR $10^{14}$ PROTON/SEC AT 500 MEV

(1) Ordinary concrete ( $\rho \simeq 2.4$) assumed.

(2) To reach tolerance (2.5 mr/hr for 40-hr. week) need 25 feet for beam stop, if there is a beam stop.

(3) Side walls and roof in beam transport area and around FFAG should be 12 feet thick to allow for steady loss of 10% of beam (all the time). This again gives $<$ 2.5 mr/hr.

(4) Can scale for other shielding materials strictly as $\frac{1}{\text{density}}$ .
(Earth $\rho$ = 1.8, Illmenite concrete $\sim \rho$ = 4)

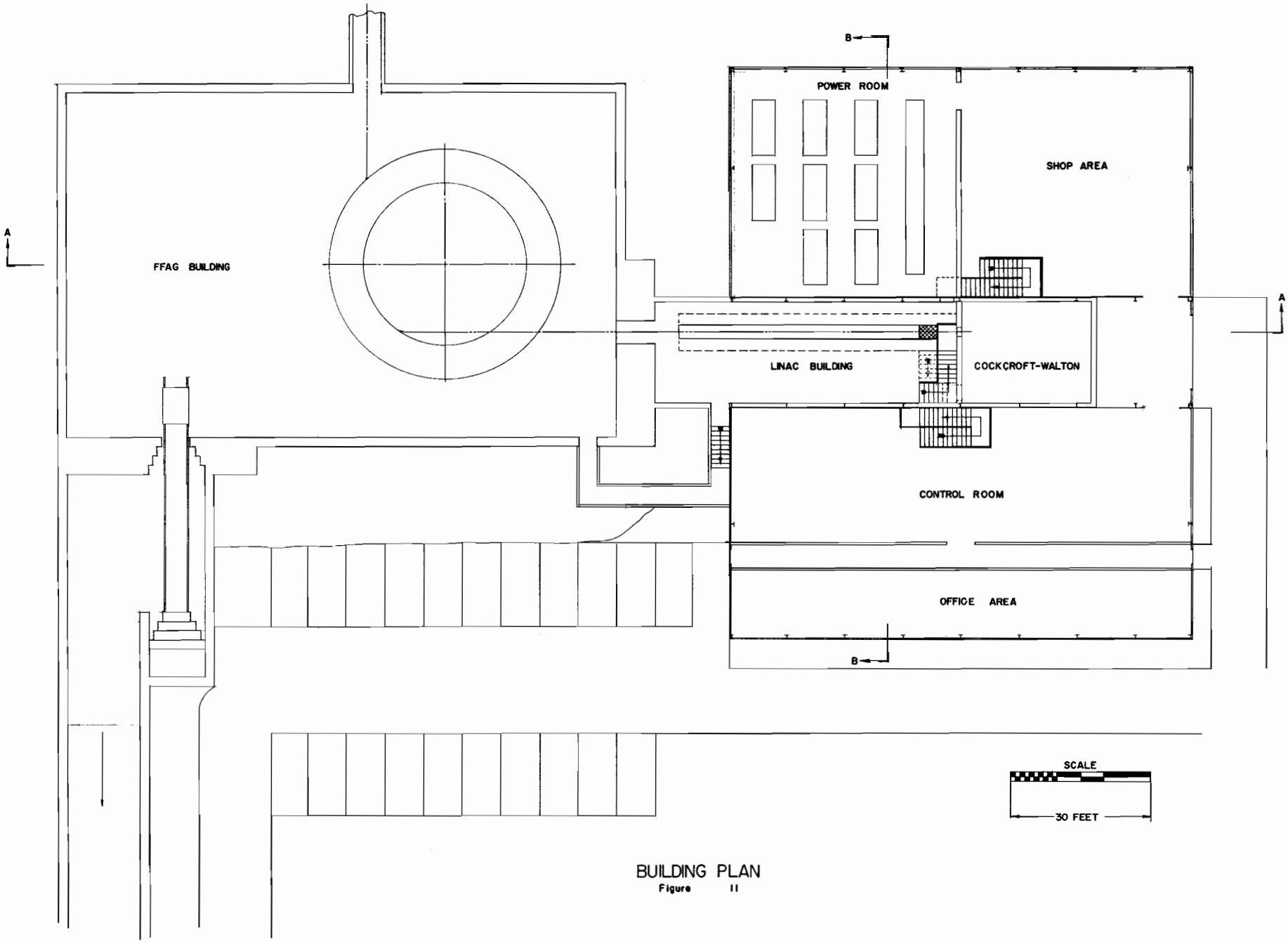


BUILDING PLAN
Figure 11

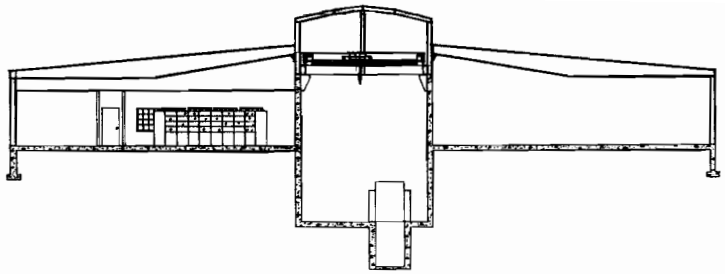

SECTION B-B

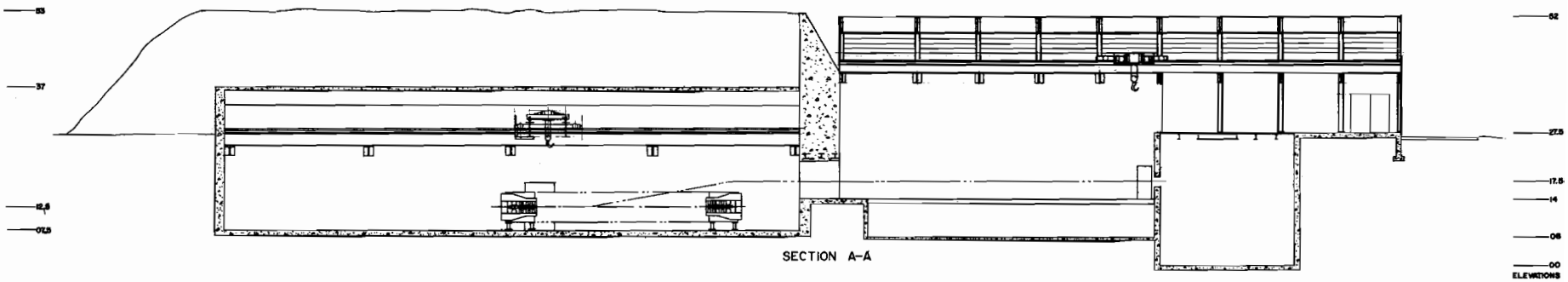


SECTION A-A

BUILDING CROSS SECTION

Figure 12

SCALE

30 FEET

TABLE XII

BUILDING DIMENSIONS, SHIELDING AND CRANES

| | Total Floor Area (sq. ft.) | Dimensions | Shielding | Cranes Capacity and Hook Height | Reference Figure and Section |
|---|---|---|---|---|---|
| Accelerator Building | 9, 000 | 120' x 75' | 16 ft. earth cover | 10 ton<br>75 ft. span<br>16 ft. | 11<br>12/A |
| Linac Building | 3, 000 | 125' x 24' | 1 ft. #150 concrete | 5 ton<br>26 ft. span<br>16 ft. to grade<br>40 ft. to pit | 12/A |
| Control & Office Building | 5, 200 | 100' x 52' | None | None | 11 |
| Power Building and Shops | 4, 800 | 100' x 48' | None | None | 11 |

# IV. UTILITY OF ACCELERATOR

## 4.1. EXPECTED BEAM INTENSITIES

Using the stability limits given in Table II, $a_x = 2.45''$ and $a_y = .84''$, the incoherent space charge limit used in the 12.5 Bev proposal gives a limit of $3.56 \times 10^{12}$ particles of injection. This estimate is for an unneutralized beam but includes a bunching factor of 3/8 and a reduction factor of 1.58 to account for beam images in the RF accelerating plates and in the iron. Since the design limit is $.83 \times 10^{12}$ protons, a safety factor of about 4 is used. At a repetition rate of 120 cycles per second this yields $10^{14}$ particles per second.

## 4.2. USE AS AN INJECTOR

The least cost for a 500 Mev accelerator is obtained if the experimental area is deleted. This allows the accelerator only to be used as an injector into a higher energy accelerator. Two possibilities are conceivably available in connection with the improvement programs of either the Brookhaven AGS or the Argonne ZGS accelerators. Both of these uses require that the beam be stacked in the larger accelerator prior to acceleration.

Application of the same space charge formulae to the ZGS accelerator yields a limit of $3.59 \times 10^{14}$ particles of 500 Mev. If one uses about 1/4 of this limit as an achievable limit, then about one second is required to stack the required charge before acceleration.

With the AGS accelerator the space charge formula gives about $4.1 \times 10^{13}$ particles at 500 Mev. Again using 1/4 of this limit as being attainable about 1/8 of a second is required to stack the charge before acceleration. Alternatively one might load the FFAG accelerator using median plane injection ~~only one vertical turn~~ in the multiturn injection system and deliver $10^{13}$ particles in 1/2 second.

Table XIII gives a summary of the space charge limits of the various accelerators.

TABLE XIII

SPACE CHARGE LIMITS

| Accelerator | Space Charge Limit at Injection (Protons/pulse) | Pulse Rate (cps) | Space Charge Limit (Protons/second) |
|---|---|---|---|
| 500 Mev FFAG | $3.56 \times 10^{12}$ at 20 Mev | 120 | $4.28 \times 10^{14}$ |
| ZGS | $3.59 \times 10^{14}$ at 500 Mev | 1/4 | $8.98 \times 10^{13}$ |
| AGS | $4.1 \times 10^{13}$ at 500 Mev | 1 | $4.1 \times 10^{13}$ |

# V. CONSTRUCTION SCHEDULE AND COST ESTIMATES

## 5.1 CONSTRUCTION SCHEDULE

The construction of the accelerator is based on the following time schedule. One year each for component modeling and detailed design, component fabrication, accelerator assembly, accelerator testing, giving a total of four years. It is estimated that 125 physicists, engineers, technicians, and administrative personnel will be required.

## 5.2 COST ESTIMATE

The costs were generally arrived at by making use of the collective experience of MURA personnel. The 12.5 Bev proposal was used with appropriate scaling factors for those items where scaling was permitted. Finally, a MURA Technical Note (TN-480) by F. T. Cole was of value in obtaining consistency checks with the other estimates.

A summary of the cost of the various items in constructing the accelerator is given below. Note that the beam transport system from the 500 Mev accelerator to the larger accelerator is included in Schedule B whereas it might legitimately be left out as contributing to the cost of the revision of the existing accelerator.

## SUMMARY COST SCHEDULE

| CATEGORY | | AMOUNT (Thousands of Dollars) | SCHEDULE REFERENCE |
|---|---|---|---|
| **Site, Utilities, and Buildings** | | | |
| 1. Site Development | | 65 | |
| 2. Utilities | | 401 | |
| 3. Buildings | | 1,014 | |
| | Subtotal | 1,480 | A |
| **Accelerator Systems** | | | |
| 1. Magnet System | | 1,869 | |
| 2. Vacuum System | | 285 | |
| 3. Injection System | | 1,229 | |
| 4. Radio Frequency System | | 578 | |
| 5. Accelerator Controls | | 386 | |
| 6. Extraction System | | 495 | |
| | Subtotal | 4,842 | B |
| **Research and Operating Equipment** | | | |
| No Entry | | | C |
| **Engineering, Design, Inspection, and Administration** | | | |
| 1. Salaries | | 5,000 | |
| 2. Travel and Communications | | 250 | |
| 3. Power, Light, and Heat | | 175 | |
| 4. Supplies, Office Furniture and Equipment | | 50 | |
| 5. Model Costs | | 500 | |
| 6. Contract Labor (assembly and installation work on accelerator) | | 500 | |
| 7. Architect-Engineer Fees and Reimbursable Costs | | 1,500 | |
| 8. Management Fee | | 100 | |
| | Subtotal | 8,075 | D |
| **Escalation and Contingency** | | | |
| 1. Escalation | | 847 | |
| 2. Contingency | | 1,017 | |
| | Subtotal | 1,864 | E |
| | TOTAL | 16,259 | |

# SCHEDULE A

## SITE, UTILITIES AND BUILDINGS
(Amounts in Thousands of Dollars)

### 1. SITE DEVELOPMENT *

| | | | |
|---|---|---|---|
| a. | Foundation Studies and Soil Exploration | 2.5 | |
| b. | Sanitary Sewers and Disposal Units (30 people) | 6 | |
| c. | Fencing (825 feet) | 4 | |
| d. | Storm Drainage (38,080 sq. ft.) | 29 | |
| e. | Roads and Aprons (800 sq. yds.) | 2.5 | |
| f. | Parking (520 sq. yds.) | 1.5 | |
| g. | Earth Excavation (11,585 cu. yds.) | 4 | |
| h. | Rock Excavation (5,000 cu. yds.) | 15 | |
| i. | Grading and Landscaping (1/40 acre ) | .5 | |
| | Subtotal | 65 | |

### 2. UTILITIES

#### a. Water Systems

| | | | |
|---|---|---|---|
| 1. | Wells and Well Pumps (2,000 gpm) | 31 | |
| 2. | Water Tower (16,000 gal.) | 8 | |
| 3. | Raw Water Piping and Valves (6,000 gpm) | 62 | |
| 4. | Deionizers and Demineralizers (100 gph) | 5 | |
| 5. | Demineralized Water Piping, Pumps and Valves (6,000 gpm) | 35 | |
| 6. | Heat Exchangers (13,000 sq. ft.) | 5 | |
| 7. | Cooling Tower (3,600 gpm) | 65 | |
| 8. | Fire Protection (150 gpm) | 12 | |
| | Subtotal | | 223 |

#### b. Electrical Systems

| | | | |
|---|---|---|---|
| 1. | High Voltage Substation and Distribution (10,000 kva) | 123 | |
| 2. | Secondary Load Substation | 15 | |
| 3. | Low Voltage Distribution | 10 | |
| 4. | Emergency Power | 30 | |
| | Subtotal | | 178 |

* Based on costs around Madison, Wisconsin

## SCHEDULE A (continued)

### 3. BUILDINGS

| | | | |
|---|---|---|---|
| a. | Accelerator Building (9,000 sq. ft., 216,000 cu. ft.) | 467 | |
| b. | Control and Office Building (5,200 sq. ft., 124,800 cu. ft.); occupancy by 20 people | 250 | |
| c. | Linac and Pre-Injector Building (3,000 sq. ft., 95,040 cu. ft.) | 95 | |
| d. | Shops and Power Building (4,800 sq. ft., 115,200 cu. ft.) | 202 | |
| | Subtotal | | 1,014 |
| | Total Schedule A | | 1,480 |

## SCHEDULE B

## ACCELERATOR SYSTEMS
(Amounts in Thousands of Dollars)

### 1. MAGNET SYSTEM

| | | | |
|---|---|---|---|
| a. | Cores, Material and Fabrication | 534 | |
| b. | Coils, Material and Fabrication | 150 | |
| c. | Magnet Accessories (Jacks, Coil Clamps, Manifolds, etc.) | 360 | |
| d. | Power Supplies | 525 | |
| e. | Measuring Equipment (Surveying and Mag. Field Meas.) | 300 | |
| | Subtotal | | 1,869 |

### 2. VACUUM SYSTEM

| | | | |
|---|---|---|---|
| a. | Chamber, Material and Fabrication | 30 | |
| b. | Flexible Couplings | 20 | |
| c. | Support Beams | 60 | |
| d. | Probes and Probe Drives | 70 | |
| e. | Vacuum System | 90 | |
| f. | Controls, Valves and Wiring | 15 | |
| | Subtotal | | 285 |

SCHEDULE B (continued)

| | | | |
|---|---|---|---|
| 3. | INJECTION SYSTEM | | |
| a. | Ion Source and Preinjector | 195 | |
| b. | Beam Transport to Linac and Buncher | 8 | |
| c. | Linac Tank | 130 | |
| d. | Linac Drift Tubes, Supports, and Quadrupoles | 180 | |
| e. | Quadrupole, Power Supplies, | 100 | |
| f. | Phase Modulators and Tuners | 50 | |
| g. | R. F. Power System | 192 | |
| h. | Vacuum System | 84 | |
| i. | Cooling Water Distribution | 20 | |
| j. | Beam Transport to Accelerator (including power supplies) | 220 | |
| k. | Inflector and Multiturn Bump Magnets (including power supplies) | 10 | |
| l. | Controls and Wiring | 40 | |
| | Subtotal | | 1,229 |
| 4. | RADIO FREQUENCY ACCELERATING SYSTEM | | |
| a. | Drift Tube and Support Members (materials and fabrication) | 4 | |
| b. | RF High Power System (including power supplies) | 280 | |
| c. | Ferrite | 6 | |
| d. | Bias Amplifiers and Power Supplies | 14 | |
| e. | Bias Magnets | 10 | |
| f. | Tuning Inductors | 11 | |
| g. | Remote Disconnects | 67 | |
| h. | Low Level and Beam Control System | 150 | |
| i. | Cooling Water Distribution | 8 | |
| j. | Controls and Wiring | 28 | |
| | Subtotal | | 578 |
| 5. | ACCELERATOR CONTROLS | | |
| a. | Controls and Instruments | 268 | |
| b. | Wiring and Communications | 118 | |
| | Subtotal | | 386 |

SCHEDULE B (continued)

6. EXTRACTION SYSTEM

| | | | |
|---|---|---|---|
| a. | Kicker and Deflector. Magnets and Power Supplies | 85 | |
| b. | Beam Transport to Final Accelerator (including power supplies) | 250 | |
| c. | Controls and Wiring | 10 | |
| d. | Modification of Existing Final Accelerator | 150 | |
| | Subtotal | | 495 |
| | Total Schedule B | | 4,842 |

SCHEDULE C

RESEARCH AND OPERATING EQUIPMENT
(Amounts in Thousands of Dollars)

No Entry

SCHEDULE D

ENGINEERING, DESIGN, INSPECTION, AND ADMINISTRATION
(Amounts in Thousands of Dollars)

| | | | |
|---|---|---|---|
| a. | Direct Salaries | 5,000 | |
| b. | Travel and Communications | 250 | |
| c. | Power, Light, and Heat During Construction | 175 | |
| d. | Office Equipment, Supplies, and Furniture | 50 | |
| e. | Model Costs | 500 | |
| f. | Contract Labor (assembly and installation work on accelerator) | 500 | |
| g. | Management Fee | 100 | |
| h. | Architect-Engineer Fees and Reimbursable Costs | 1,500 | |
| | Total Schedule D | | 8,075 |

# SCHEDULE E

## ESCALATION AND CONTINGENCY
(Amounts in Thousands of Dollars)

| | | | |
|---|---|---|---|
| **1.** | **ESCALATION** | | |
| a. | 3-1/2% Per Year for 2 Years on Schedules A, B, and C | 443 | |
| b. | 2-1/2% Per Year for 2 Years on Schedule D | 404 | |
| | Total Escalation | | 847 |
| **2.** | **CONTINGENCY** | | |
| a. | 15 Per Cent of Conventional Structures | 68 | |
| b. | 25 Per Cent of Accelerator Buildings | 141 | |
| c. | 10 Per Cent of Schedule D | 808 | |
| | Total Contingency | | 1,017 |
| | Total Schedule E | | 1,862 |
| | GRAND TOTAL | | 16,259 |