Fermilab Library
0 1160 0038901 9

637

MIDWESTERN UNIVERSITIES RESEARCH ASSOCIATION

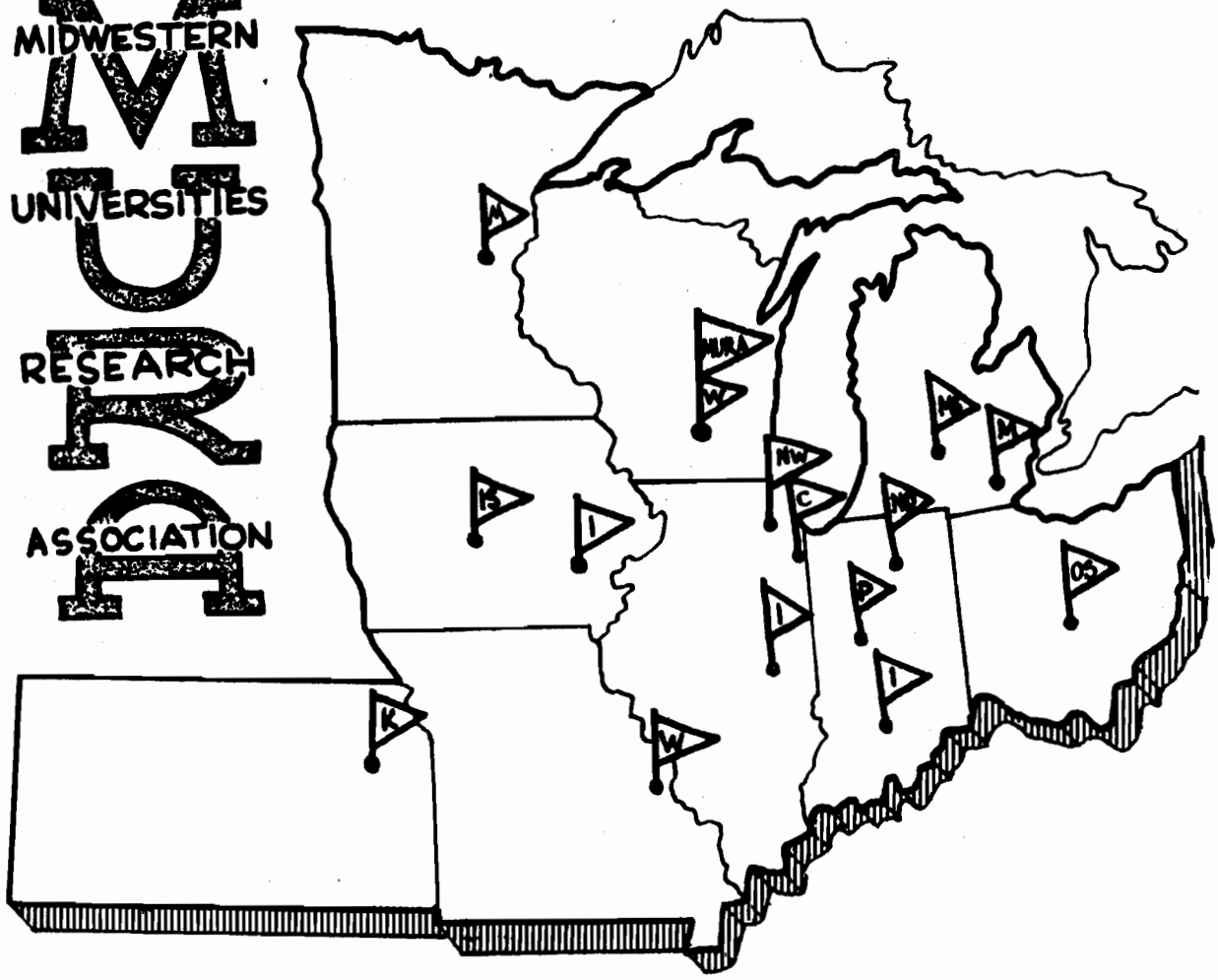

THE EXCITATION OF A RESONANT CAVITY BY WAVEGUIDES OF SMALL CROSS-SECTIONAL DIMENSIONS

J. Van Bladel

REPORT NUMBER 637

MURA-637
UC-28: Particle Accelerators and
High Voltage Machines
TID-4500 (16th Edition)

MIDWESTERN UNIVERSITIES RESEARCH ASSOCIATION*

2203 University Avenue, Madison 5, Wisconsin

THE EXCITATION OF A RESONANT CAVITY BY WAVEGUIDES OF SMALL CROSS-SECTIONAL DIMENSIONS

J. Van Bladel
Midwestern Universities Research Association
and
Department of Electrical Engineering, University of Wisconsin

May 1, 1962

ABSTRACT

Two basic configurations are considered in this report: (1) a resonant cavity with a single input waveguide of vanishingly small cross-sectional dimensions, for which the pressure in the resonator and the reflection coefficient in the waveguide are investigated. Particular emphasis is laid on the behavior around a resonant frequency of the cavity. (2) a cavity with an input and an output waveguide (a "filter"). The transmission properties of that structure are investigated around resonance. Scalar phenomena are considered for simplicity.

*AEC Research and Development Report. Research supported by the U. S. Atomic Energy Commission, Contract No. AT(11-1)-384.

I. Introduction

The excitation of a cavity by an input waveguide has been analyzed quite extensively in the literature. It is well known, for example, that the cavity behaves as a reactive load, and that this load reduces to an ($\mathcal{L}$, C) resonant circuit in the vicinity of a resonant frequency. In this report, we investigate the resonance phenomenon by methods which are somewhat different from the traditional ones.[1] Our analysis shows that the problem can be formulated in terms of an integral equation, and that the latter can be solved explicitly in the limit of small cross-sectional dimensions of the input waveguide. To enhance the simplicity of the mathematical treatment, and yet conserve all the essential features of the method, attention is restricted to a treatment of the scalar (acoustic) problem. The pertinent configuration is shown in Fig. 1, where both resonator and input tube have perfectly rigid walls. The resonance phenomenon is investigated under the assumption that a pressure wave of amplitude P_0 is incident in the input waveguide. Particular interest resides in an evaluation of the reflection coefficient in the tube and of the pressure in the resonator. The statement is often made that the pressure becomes infinite at resonance, and that the finite value observed in practice is the result of the lossy character of the walls. This statement is not true in the conditions of Fig. 1. Here the pressure in the resonator remains finite even if the walls are perfectly rigid.

---

[1] J. C. Slater, "Microwave Electronics" Ch. 4, D. Van Nostrand Co., Inc. Princeton, 1950.

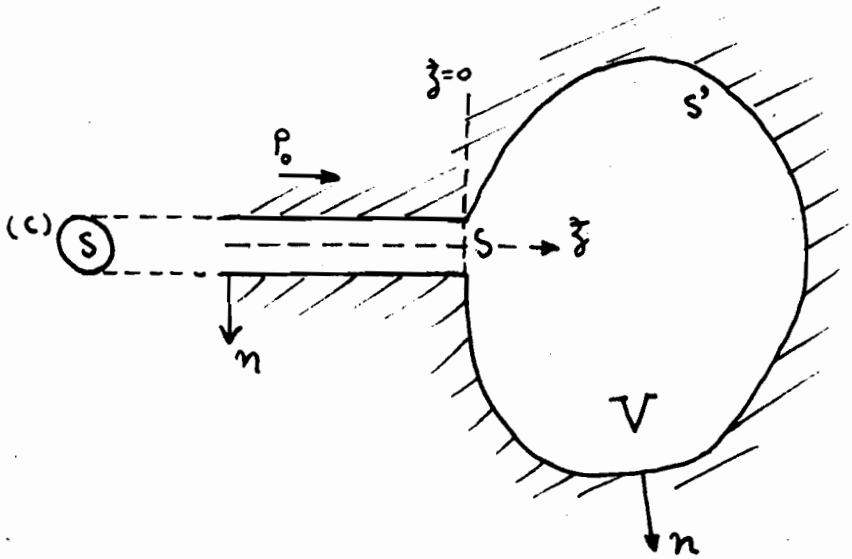

Fig. 1

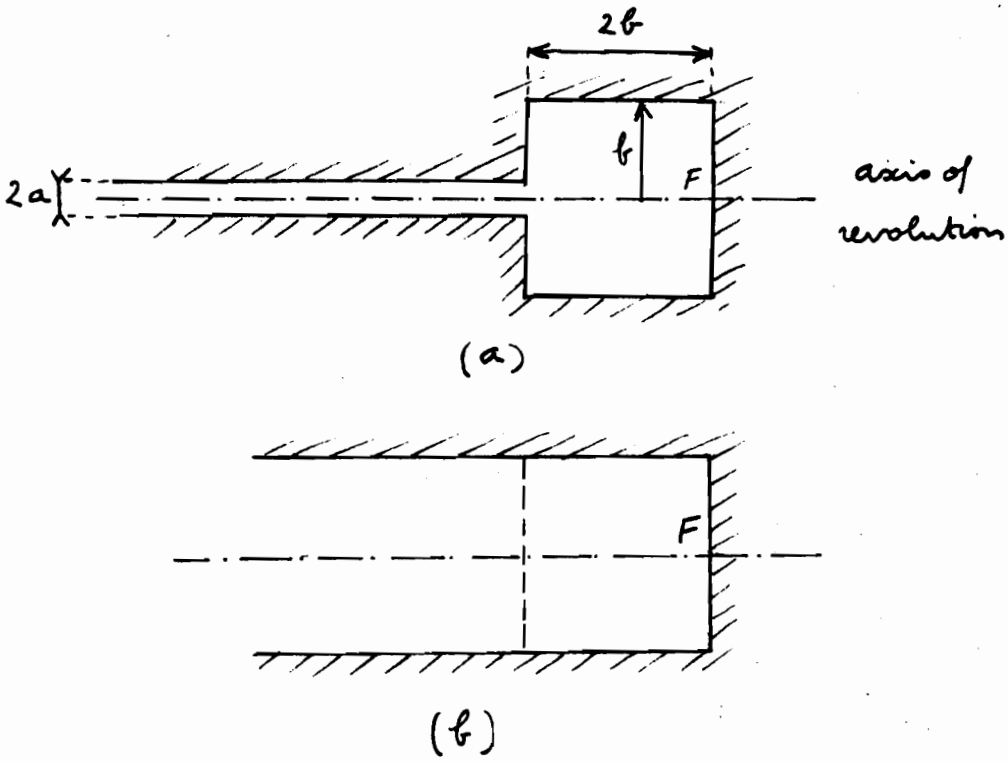

Fig. 2

The analysis of the simple structure of Fig. 2 lends support to that assertion. In the "limit" geometry of Fig. 2b, where tube and cavity have the same radius, it is found that the pressure at F remains equal to $2P_0$ in the whole frequency range from zero to $k = \pi/2\ell$ (value which corresponds to the lowest resonant frequency of the cavity). No resonance effects occur. However, resonance effects become apparent if the radius of the input tube is made to decrease from its initial value b. As a decreases, the resonance curve becomes more and more peaked, and the Q of the resonator becomes larger and larger.[2] It is our purpose to analyze these effects quantitatively for the general type of resonator shown in Fig. 1. We characterize the size of the input guide by a characteristic length ε .

II. An Integral Equation for the Velocity in the Aperture

The normal component of the velocity in the aperture is proportional to $\frac{\partial p}{\partial z}$. The actual relationship is

$$v_z = -\frac{1}{jk\rho_0 c}\frac{\partial p}{\partial z}$$

where ρ_0 is the mass per unit volume and c is the velocity of sound. An integral equation for $\frac{\partial p}{\partial z}$ (or v_z) can be obtained by (1) expressing the pressure in the tube in terms of the value of $\frac{\partial p}{\partial z}$ in the aperture (2) expressing the pressure in the resonator in terms of the same function (3)

---

[2]This is the "loaded Q" of the cavity, as defined, for example, in J. C. Slater, loc. cit.

equating the two values of the pressure at all points of S. We start with an evaluation of the pressure in the tube. The pressure can be expanded in terms of a set of "Neumann" eigenfunctions $\psi_{mn}(x,y)$ in the following manner

$$p(x,y,z) = \sum_{m,n} A_{mn}(z)\,\psi_{mn}(x,y)$$

where the ψ's satisfy

$$\begin{aligned} &\nabla^2_{xy}\,\psi_{mn} + k^2_{mn}\,\psi_{mn} = 0 \\ &\frac{\partial \psi_{mn}}{\partial n} = 0 \quad \text{on contour } C \\ &\int_S \psi^2_{mn}\, dS = 1 \end{aligned} \tag{1}$$

It is to be noticed that $\frac{1}{\sqrt{S}}$, with eigenvalue zero, is one of the eigenfunctions of the set. To determine the coefficients $A_{mn}(z)$, use must be made of Helmholtz' equation

$$\nabla^2 p + k^2 p = 0 \tag{2}$$

A few trivial steps lead to the expansion

$$\frac{p(x,y,z)}{P_0} = e^{-jkz} + K e^{+jkz} + \sum_{m,n} A_{mn}\, e^{\gamma_{mn} z}\, \psi_{mn}(x,y) \tag{3}$$

where $\gamma^2_{mn} = k^2_{mn} - k^2$. It has been assumed, in the derivation of Eq. (3), that the operating frequency is sufficiently low for the lowest mode only to be propagated. This condition is automatically fulfilled in our problem, because the cross-sectional dimensions of the guide are vanishingly small, and the frequency range of interest is centered on one of the lowest resonant frequencies of the cavity. The quantity K appearing in

Eq. (3) is the reflection coefficient, whose magnitude is equal to one when the cavity is lossless. Both K and the unknown coefficients A_{mn} can be expressed in terms of $g(x,y) = \frac{1}{P_0} \frac{\partial p}{\partial z}\Big|_{z=0}$. This is done by setting the z-derivative of the right-hand member of Eq. (3) equal to $g(x,y)$ in the aperture plane. The result is

$$\frac{p(x,y,0)}{P_0} = \underbrace{2 + \frac{1}{jkS}\int_S g(x',y')\,dS'}_{1+K} + \sum_{m,n} \frac{\psi_{mn}(x,y)}{\gamma_{mn}} \int_S g(x'y')\,\psi_{mn}(x'y')\,dS' \tag{4}$$

The pressure in the <u>resonator</u> can be obtained by an expansion in terms of the Neumann-type eigenfunctions of the resonator. These are defined by

$$\begin{aligned} &\nabla^2 \phi_{\alpha\beta\gamma} + k^2_{\alpha\beta\gamma}\, \phi_{\alpha\beta\gamma} = 0 \\ &\frac{\partial \phi_{\alpha\beta\gamma}}{\partial n} = 0 \quad \text{at the boundary} \\ &\int_V \phi^2_{\alpha\beta\gamma}\, dV = 1 \end{aligned} \tag{5}$$

One of these normalized eigenfunctions is $\frac{1}{\sqrt{V}}$, and the corresponding expansion term is the average value of the pressure in the resonator. We write

$$p(\bar{r}) = p_{av} + \sum_{\alpha\beta\gamma} B_{\alpha\beta\gamma}\, \phi_{\alpha\beta\gamma}(\bar{r}) \tag{6}$$

To determine the expansion coefficients, use must be made of Eq. (2). It is to be noticed, in this respect, that the expansion of $\nabla^2 p$ cannot be obtained by termwise differentiation of the right-hand member of Eq. (6).

A separate expansion must be used

$$\nabla^2 p = A + \sum_{\alpha\beta\gamma} C_{\alpha\beta\gamma} \phi_{\alpha\beta\gamma}$$

and the relationship between the B's and the C's then follows by an application of Green's theorem.

$$C_{\alpha\beta\gamma} = \int_V \phi_{\alpha\beta\gamma} \nabla^2 p \, dV = \int_V p \nabla^2 \phi_{\alpha\beta\gamma} \, dV + \int_{S+S'} \left[\phi_{\alpha\beta\gamma} \frac{\partial p}{\partial n} - p \frac{\partial \phi_{\alpha\beta\gamma}}{\partial n} \right] dS$$

$$= -k^2_{\alpha\beta\gamma} B_{\alpha\beta\gamma} - \int_S \phi_{\alpha\beta\gamma} \frac{\partial p}{\partial z} dS$$

On the other hand, Eq. (2) implies that $C_{\alpha\beta\gamma}$ is equal to $-k^2 B_{\alpha\beta\gamma}$. Equating both values of $C_{\alpha\beta\gamma}$ gives $B_{\alpha\beta\gamma}$, and the pressure in the resonator follows as

$$\frac{p(\bar{r})}{P_0} = \frac{1}{k^2 V} \int_S g(x,y) \, dS + \sum_{\alpha\beta\gamma} \frac{\phi_{\alpha\beta\gamma}(\bar{r})}{k^2 - k^2_{\alpha\beta\gamma}} \int_S \phi_{\alpha\beta\gamma} g(x,y) \, dS \tag{7}$$

The desired integral equation in $g(x,y)$ is obtained by equating the right-hand members of Eq. (4) and Eq. (7) for points in the aperture S.

III. The "Small-Aperture" Limit

In determining the small-aperture limit of the equations, it is convenient to express quantitites such as the transverse coordinates in the tube, the element of area of the cross section, or the eigenvalues and eigenfunction of the guide, in terms of the characteristic length Σ. Thus

$$x = \varepsilon X$$
$$y = \varepsilon Y$$
$$dS = \varepsilon^2 d\sigma$$
$$k_{mn}^2 = \frac{K_{mn}^2}{\varepsilon^2}$$
$$\psi_{mn}(x,y) = \frac{1}{\varepsilon} A_{mn}(X,Y)$$

where X, Y, $d\sigma$, K_{mn}^2 and A_{mn} are dimensionless quantities. In terms of these new variables, the pressure in the aperture becomes, on the <u>tube</u> side,

$$\frac{p(X,Y)}{P_0} = 2 + \frac{1}{jk} g_{av} + \sum_{m,n} \varepsilon \frac{A_{mn}(X,Y)}{(K_{mn}^2 - k^2\varepsilon^2)^{1/2}} \int_\sigma g(X_0 Y_0) A_{mn}(X_0 Y_0)\, d\sigma_0$$

$$= \underbrace{2 + \frac{1}{jk} g_{av}}_{1+K} + \varepsilon \sum_{m,n} \frac{A_{mn}(X,Y)}{K_{mn}} \int_\sigma g(X_0 Y_0) A_{mn}(X_0 Y_0)\, d\sigma_0 + \text{terms in } \varepsilon^3 g \tag{8}$$

The pressure in the <u>resonator</u>, given by Eq. (7), can be simplified by recognizing that S is a vanishingly small area, over which $\phi_{\alpha\beta\gamma}(\bar{r})$ is practically constant for the modes of interest. A noticeable variation across the aperture occurs for modes whose resonant wavelength is of the order of ε, but Eq. (7) shows that the contribution of these modes approaches zero as $\varepsilon \to 0$, provided the frequency remains in the neighborhood of the lowest resonant frequencies. For all modes of interest, then

$$\phi = \phi(P) + \text{grad}\,\phi \cdot \bar{\rho} + \cdots = \phi(P) + \varepsilon\, \text{grad}\,\phi \cdot \bar{R} + \cdots = \phi(P) + \varepsilon\, \bar{V} \cdot \bar{R} + \cdots$$

where P is a point in S, $\bar{\rho}$ is the radius vector from P, and $\bar{R}$ is the vector with projections X and Y. The pressure in the cavity follows as

$$\frac{p}{p_0} = \varepsilon^2 \frac{\sigma g_{av}}{k^2 V} + \varepsilon^2 \sigma g_{av} \sum_{\alpha\beta\gamma} \phi_{\alpha\beta\gamma}(P) \frac{\phi_{\alpha\beta\gamma}(\bar{r})}{k^2 - k^2_{\alpha\beta\gamma}} + \varepsilon^3 \sum_{\alpha\beta\gamma} \frac{\phi_{\alpha\beta\gamma}(\bar{r})}{k^2 - k^2_{\alpha\beta\gamma}} \int_\sigma \bar{R}.\bar{V}_{\alpha\beta\gamma}\, g\, d\sigma + \cdots \tag{9}$$

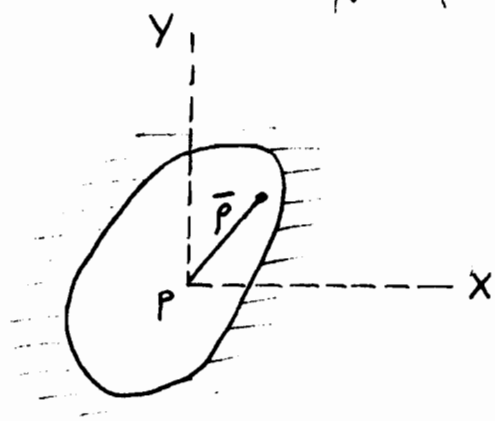

Fig. 3

Equations (8) and (9), when applied to point P, yield values of the pressure which must be equal at all frequencies. Hence, in the limit of small ε,

$$1 + K = 2 + \frac{1}{jk} g_{av} = \varepsilon^2 g_{av} \underbrace{\sigma \left[\frac{1}{k^2 V} + \sum_{\alpha\beta\gamma} \frac{\phi^2_{\alpha\beta\gamma}(P)}{k^2 - k^2_{\alpha\beta\gamma}} \right]}_{M(k)}$$

or, equivalently

$$g_{av} = -\frac{2jk}{1 - jk\varepsilon^2 M(k)}$$

$$K = -\frac{1 + jk\varepsilon^2 M(k)}{1 - jk\varepsilon^2 M(k)} \tag{10}$$

for a given frequency. When ε is a very small (but fixed) quantity, the limit of these expressions for $k \to 0$ is, with $\varepsilon^2 \sigma = S$,

$$g_{\omega} = 2 k^2 \frac{V}{S} \left[1 - j k \frac{V}{S} + \cdots \right]$$

$$K = 1 - 2j \, k \frac{V}{S} \tag{11}$$

Clearly, low frequencies yield a value of K equal to 1. As the frequency increases, the argument of K becomes more and more negative and, from Eq. (10), reaches the value -90° at a wavelength of the order of $2\pi \frac{V}{S}$. It reaches the value - 180° at the frequency for which M (k) = 0. Above that frequency, M (k) becomes negative, and K is given by

$$K = -1 - 2jk \, \varepsilon^2 M(k) + \cdots \tag{11}$$

The pressure in the resonator follows from Eq. (9) and Eq. (10). It is

$$\frac{p}{p_0} = -2jk \, \varepsilon^2 \sigma \left[1 + jk \, \varepsilon^2 M(k) \right] \left[\frac{1}{k^2 V} + \sum_{\alpha\beta\gamma} \frac{\phi(P) \, \phi(\bar{r})}{k^2 - k^2_{\alpha\beta\gamma}} \right] \tag{12}$$

IV. Behavior Around Resonance

In Eq. (9), the denominators $k^2 - k^2_{\alpha\beta\gamma}$ vanish at the resonant frequency of the corresponding mode. This does not mean that the pressure becomes infinite at these frequencies. To see this, notice from Eq. (8) that the pressure in the aperture must remain finite at all frequencies, as implied by the value 1 of the magnitude of K. In consequence, $\frac{g_{\omega}}{k^2 - k^2_{\alpha\beta\gamma}}$ must remain finite at the resonant frequency. Assuming, for simplicity, that the mode of concern is the lowest one, the finite character of

$\dfrac{g_{\alpha\beta}}{k^2-k_1^2}$ implies a power series expansion of the form

$$g_{\alpha\beta} = (k-k_1)\,m(\varepsilon) + (k-k_1)^2 n(\varepsilon) + (k-k_1)^3 s(\varepsilon) + \cdots$$

This expression, upon insertion in Eq. (7), yields

$$\frac{p}{p_0} = 2 - \frac{j}{k_1} m(\varepsilon)\,(k-k_1) - \frac{j}{k_1}\left[n(\varepsilon) - \frac{m(\varepsilon)}{k_1}\right](k-k_1)^2 + \cdots$$

for the pressure on the tube side of the aperture. Similarly, insertion in Eq. (8) gives the pressure in the resonator

$$\frac{p}{p_0} = \varepsilon^2\sigma\,\frac{m(\varepsilon)\,\phi_1(\bar{r})\,\phi_1(P)}{2k_1} + \varepsilon^2\sigma\,(k-k_1)\left[\frac{m(\varepsilon)}{k_1^2 V} + \sum_{\neq 1}\frac{\phi_{\alpha\beta\gamma}(\bar{r})\,\phi_{\alpha\beta\gamma}(P)}{k_1^2 - k_{\alpha\beta\gamma}^2}\,m(\varepsilon)\right.$$

$$\left. + \frac{\phi_1(\bar{r})\,\phi_1(P)}{2k_1}\left(n(\varepsilon) - \frac{m(\varepsilon)}{2k_1}\right)\right]$$

$$+ \varepsilon^2\sigma\,(k-k_1)^2\left\{n(\varepsilon)\left[\frac{1}{k_1^2 V} + \sum_{\neq 1}\frac{\phi_{\alpha\beta\gamma}(\bar{r})\,\phi_{\alpha\beta\gamma}(P)}{k_1^2 - k_{\alpha\beta\gamma}^2}\right] + m(\varepsilon)\left[-\frac{2}{k_1^3 V} - 2k_1\sum_{\neq 1}\frac{\phi_{\alpha\beta\gamma}(\bar{r})\,\phi_{\alpha\beta\gamma}(P)}{(k_1^2 - k_{\alpha\beta\gamma}^2)^2}\right]\right.$$

$$\left. + \frac{\phi_1(\bar{r})\,\phi_1(P)}{2k_1}\left[\frac{m(\varepsilon)}{4k_1^2} + s(\varepsilon) - \frac{n(\varepsilon)}{2k_1}\right]\right\}$$

Equating the two pressures at P gives

$$m(\varepsilon) = \frac{4k_1}{\varepsilon^2\sigma\,\phi_1^2(P)}$$

$$n(\varepsilon) = -j\,\frac{[m(\varepsilon)]^2}{2k_1}$$

$$s(\varepsilon) = -\frac{[m(\varepsilon)]^3}{4k_1^2}$$

whence the pressure in the cavity becomes

$$\frac{p}{p_0} = 2\,\frac{\phi_1(\bar{r})}{\phi_1(P)} - j(k-k_1)\frac{4}{\sigma\varepsilon^2}\,\frac{\phi_1(\bar{r})}{\phi_1^3(P)} - (k-k_1)^2\frac{8\,\phi_1(\bar{r})}{\sigma^2\varepsilon^4\,\phi_1^5(P)} + \cdots$$

$$= 2\,\frac{\phi_1(\bar{r})}{\phi_1(P)}\left[1 - j(k-k_1)\frac{2}{\sigma\varepsilon^2\phi_1^2(P)} - (k-k_1)^2\left(\frac{2}{\sigma\varepsilon^2\,\phi_1^2(P)}\right)^2 + \cdots\right] \tag{13}$$

The pressure is down to $3\,db$ of its resonant value when $k = k_1 \pm \frac{\sigma\varepsilon^2\phi_1^2(P)}{2}$

It follows that the bandwidth-to-center frequency ratio is equal to $\frac{\Delta k}{k_1} = \frac{\sigma\varepsilon^2\,\phi_1^2(P)}{k_1}$ and that the Q of the cavity is given by

$$Q = \frac{k_1}{S\,\phi_1^2(P)} \tag{14}$$

Similar arguments show the reflection coefficient in the input tube to be

$$K = 1 + \frac{g_{av}}{jk} = 1 - j\,\frac{4(k-k_1)}{S\,\phi_1^2(P)} + \cdots \tag{15}$$

The results of the preceding analysis make it possible to predict how the argument θ of the reflection coefficient varies as a function of frequency. We already know that θ is vanishingly small at low frequencies, reaches a sizable negative value for wavelengths of the order of $\frac{V}{S}$, and subsequently levels off until the first resonant frequency is approached. Equation (11) indicates that the "plateau" occurs at a value of the argument slightly below - 180°. The behavior of K in the vicinity of the resonant

frequency is governed by Eq. (15), which indicates that the argument reaches a value of -360° at resonance, and that the slope of the θ (k) curve at that frequency is proportional to $\frac{1}{\varepsilon^2}$, that is, to $\frac{1}{S}$.

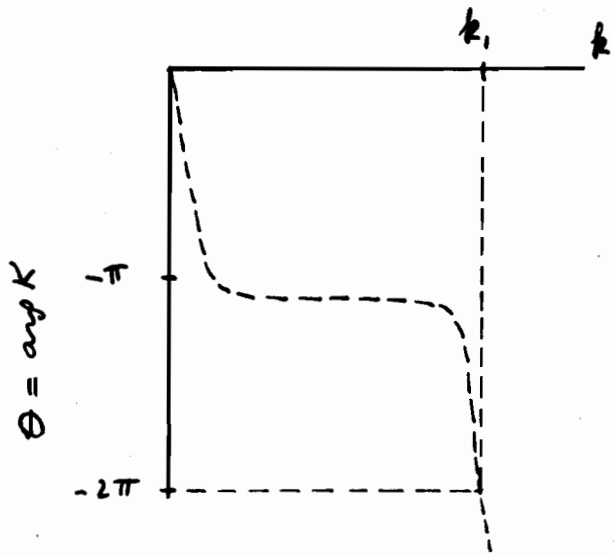

Fig. 4

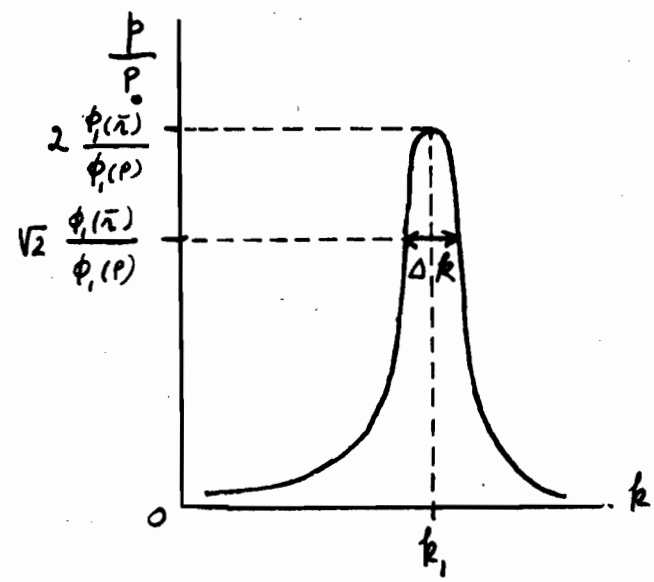

Fig. 5

The frequency dependence of the pressure at a point in the resonator can be predicted by similar methods. Equations (12) and (13) show that $p(\bar{r})$ is proportional to ε^2 far away from resonance, and that its resonant value is $2\,\frac{\phi_1(\bar{r})}{\phi_1(P)}$, independently of the size of the input tube. The width Δk of the peak is equal to $\frac{1}{\sqrt{2}}\,\sigma\,\varepsilon^2\,\phi_1^2(P)$, and is seen to be proportional to the aperture area S.

V. Cavity Filters

The techniques developed in the preceding sections can be extended to cavities having both input and output waveguides. Let us assume that an incident wave of amplitude P_0 exists in tube t, and that this wave produces a reflected wave $K P_0 e^{jkz}$ in t, and a transmitted wave $T P_0 e^{-jkz_0}$ in t_0. To evaluate the magnitude of these waves, we introduce two (unknown) functions: $g(x,y) = \frac{1}{P_0} \frac{\partial p}{\partial z}\Big|_{z=0}$ in S, and $g'(x_0,y_0) = \frac{1}{P_0} \frac{\partial p}{\partial z_0}\Big|_{z_0=0}$ in S'.

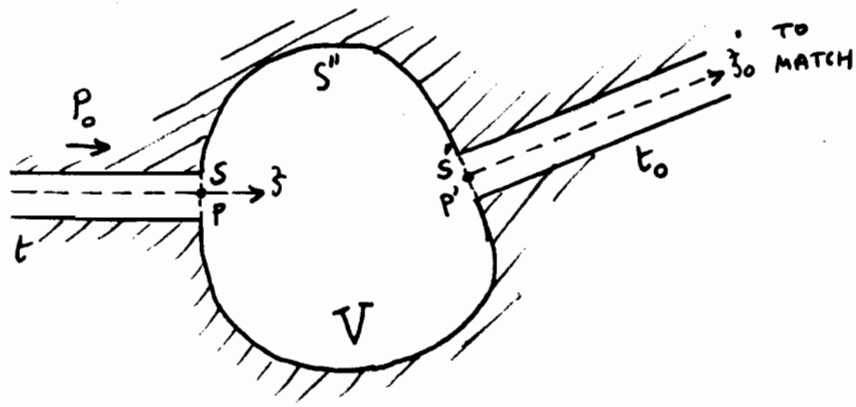

Fig. 6

It is an easy matter to express the pressure in the tubes and in the cavity in terms of g and g'. We shall not give these relationships explicitly in the general case, but will particularize our equations to guides of very small cross section. The area of the cross sections can be conveniently expressed in terms of a length ε. We write $S = \varepsilon^2 \sigma$ and $S' = \varepsilon^2 \sigma'$. The pressure in S is still given by Eq. (7), and the pressure S' is,

similarly,

$$\frac{p}{p_0} = -\frac{1}{jk} g'_{av} - \varepsilon \sum_{m,n} \frac{B_{mn}(x_0, y_0)}{R_{mn}} \int_{\sigma'} g'(x'_0 y'_0)\, B_{mn}(x'_0 y'_0)\, d\sigma'_0 \tag{16}$$

where B_{mn} and R_{mn} correspond, in the output tube, to A_{mn} and K_{mn} in the input tube. The pressure in the cavity is now

$$\frac{p}{p_0} = \frac{\varepsilon^2}{k^2 V}\left(\sigma g_{av} - \sigma' g'_{av}\right) + \varepsilon^2 \sum_{\alpha\beta\gamma} \frac{\phi_{\alpha\beta\gamma}(\bar{r})}{k^2 - k^2_{\alpha\beta\gamma}} \left[\sigma g_{av}\, \phi_{\alpha\beta\gamma}(P) - \sigma' g'_{av}\, \phi_{\alpha\beta\gamma}(P')\right] + \text{terms in } \varepsilon^3 \tag{17}$$

We are particularly interested in the frequency band around a resonant frequency, say the lowest one. The average velocities can be expanded in a power series of $(k - k_1)$

$$\begin{aligned} g_{av} &= g_0 + (k-k_1)\, m(\varepsilon) + (k-k_1)^2 n(\varepsilon) + (k-k_1)^3 s(\varepsilon) + \cdots \\ g'_{av} &= g'_0 + (k-k_1)\, m'(\varepsilon) + (k-k_1)^2 n'(\varepsilon) + (k-k_1)^3 s'(\varepsilon) + \cdots \end{aligned} \tag{18}$$

The requirement of boundedness of the pressure in the aperture yields the condition

$$\sigma\, \phi_1(P)\, g_0 - \sigma'\, \phi_1(P')\, g'_0 = 0$$

Additional relationships between g_0, g'_0 and the other expansion coefficients are obtained by equating the expressions for the pressure on both sides of the apertures S and S'. The calculations are long but trivial. In the limit of small ε, we find

$$g_0 = -2jk_1 \frac{S'\phi_1^2(P')}{S\phi_1^2(P) + S'\phi_1^2(P')}$$

$$g_0' = -2jk_1 \frac{S\phi_1(P)\phi_1(P')}{S\phi_1^2(P) + S'\phi_1^2(P')}$$

$$m = 4k_1 \frac{S\phi_1^2(P)}{[S\phi_1^2(P) + S'\phi_1^2(P')]^2} \tag{19}$$

$$m' = -4k_1 \frac{S\phi_1(P)\phi_1(P')}{[S\phi_1^2(P) + S'\phi_1^2(P')]^2}$$

$$n = -8jk_1 \frac{S\phi_1^2(P)}{[S\phi_1^2(P) + S'\phi_1^2(P')]^2}$$

$$n' = 8jk_1 \frac{S\phi_1(P)\phi_1(P')}{[S\phi_1^2(P) + S'\phi_1^2(P')]^2}$$

These remarkably simple formulas vividly illustrate how the wave transmission process takes place. The transmission coefficient, for example, is given by

$$T = \frac{j}{k} g_{av}' = 2 \frac{S\phi_1(P)\phi_1(P')}{S\phi_1^2(P) + S'\phi_1^2(P')} \left[1 - j(k-k_1)\frac{2}{S\phi_1^2(P) + S'\phi_1^2(P')} - (k-k_1)^2 \frac{4}{[S\phi_1^2(P) + S'\phi_1^2(P')]^2} + \cdots\right] \tag{20}$$

Its magnitude is down to $\frac{1}{\sqrt{2}}$ of the resonant value at frequencies

$$k = k_1 \pm \frac{S\phi_1^2(P) + S'\phi_1^2(P')}{2}$$

In consequence, the bandwidth-to-central frequency ratio is

$$\frac{\Delta k}{k_1} = \frac{s\phi_1^2(\rho) + s'\phi_1^2(\rho')}{k_1} \tag{21}$$

This relationship characterizes the filtering properties of the cavity. The reflection coefficient in the input tube can be obtained by similar techniques as

$$K = 1 - \frac{2s'\phi_1^2(\rho')}{s\phi_1^2(\rho) + s'\phi_1^2(\rho')} - 4j(k-k_1)\frac{s\phi_1^2(\rho)}{\left[s\phi_1^2(\rho) + s'\phi_1^2(\rho')\right]^2} - 8(k-k_1)^2\frac{s\phi_1^2(\rho)}{\left[s\phi_1^2(\rho) + s'\phi_1^2(\rho')\right]^3}$$

It is to be noticed that K is smaller than 1 in absolute value. This is to be expected because some energy is transmitted down the output tube. In fact, the reflection coefficient at resonance is equal to zero (and the cavity is matched to the input tube) when $s\phi_1^2(\rho) = s'\phi_1^2(\rho')$.

LIST OF CAPTIONS

Fig. 1. Resonant cavity with input waveguide.

The cavity volume is bounded by S and S'.

Fig. 2. Circular cylindrical cavity with coaxial input-waveguide.

Fig. 3. Coordinates in the aperture S.

Fig. 4. Frequency dependence of the argument of the reflection coefficient.

Fig. 5. Frequency dependence of the pressure at a typical point in the cavity.

Fig. 6. Cavity with two waveguides.

The cavity volume is bounded by S, S' and S''.