602

Fermilab Library
0 1160 0038878 9

MIDWESTERN UNIVERSITIES RESEARCH ASSOCIATION

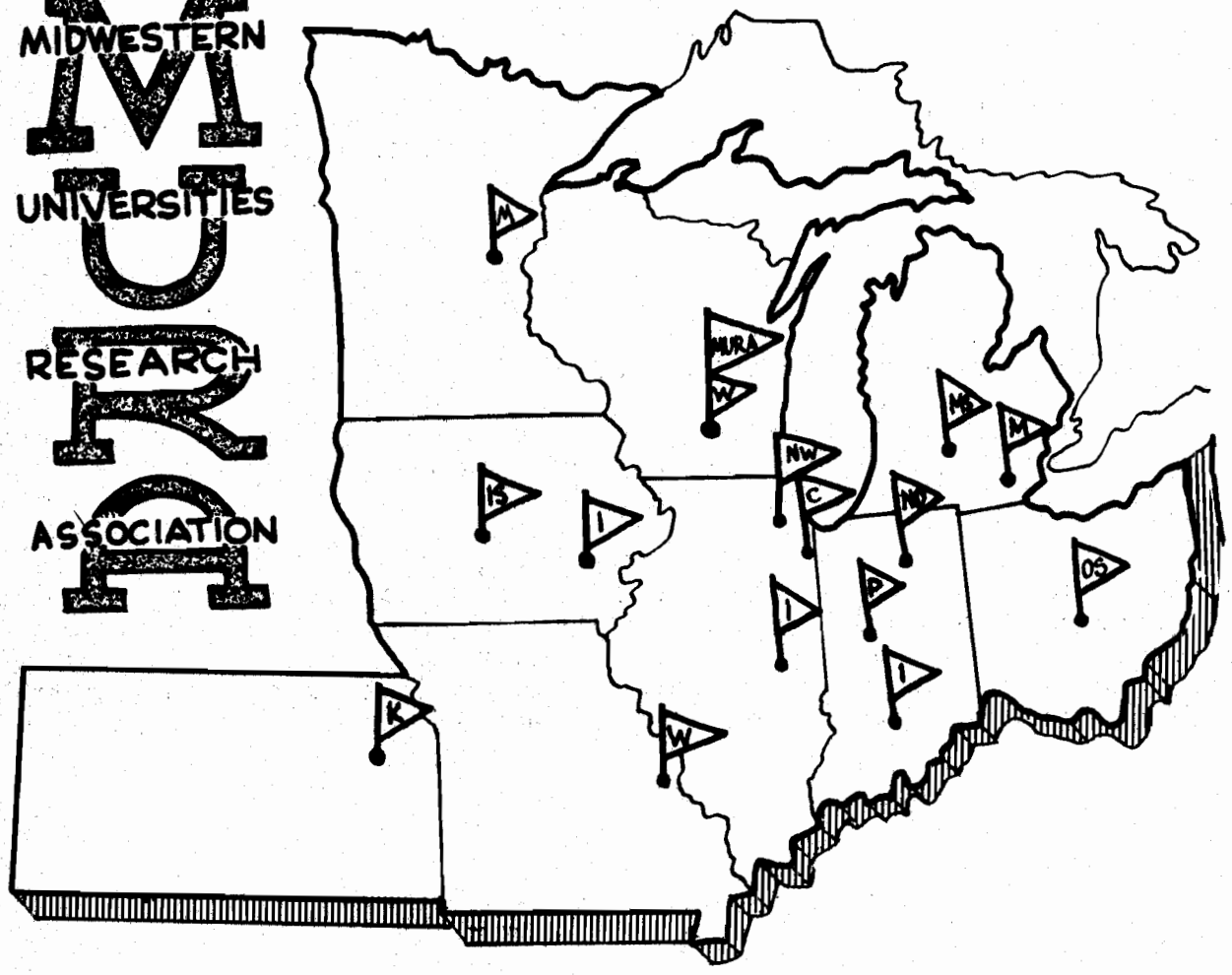

RELAXATION CALCULATION OF MAGNETIC FIELDS PRODUCED BY DISTRIBUTED CURRENTS IN PRESENCE OF IRON WITH A VARIABLE PERMEABILITY

S.C. Snowdon and R.S. Christian

REPORT **NUMBER** 602

LEGAL NOTICE

This report was prepared as an account of Government sponsored work. Neither the United States, nor the Commission, nor any person acting on behalf of the Commission:

A. Makes any warranty or representation, expressed or implied, with respect to the accuracy, completeness, or usefulness of the information contained in this report, or that the use of any information, apparatus, method, or process disclosed in this report may not infringe privately owned rights; or

B. Assumes any liabilities with respect to the use of, or for damages resulting from the use of any information, apparatus, method, or process disclosed in this report.

As used in the above, "person acting on behalf of the Commission" includes any employee or contractor of the Commission, or employee of such contractor, to the extent that such employee or contractor of the Commission, or employee of such contractor prepares, disseminates, or provides access to, any information pursuant to his employment or contract with the Commission, or his employment with such contractor.

Printed in USA. Price $0.50. Available from the

Office of Technical Services
U. S. Department of Commerce
Washington 25, D. C.

MURA-602
UC-28, Particle Accelerators and
High Voltage Machines
TID-4500 (16th Edition)

MIDWESTERN UNIVERSITIES RESEARCH ASSOCIATION*

2203 University Avenue, Madison, Wisconsin

RELAXATION CALCULATION OF MAGNETIC FIELDS PRODUCED BY DISTRIBUTED CURRENTS IN PRESENCE OF IRON WITH A VARIABLE PERMEABILITY

S.C. Snowdon and R.S. Christian

January 16, 1961

ABSTRACT

The solutions obtained previously for the magnetic field produced by a spiral sector FFAG magnet in which the pole face windings are distributed in spiral and radial grooves have been extended to include the effects of a finite variable permeability in the iron. A unified method is presented for the construction of the algorisms. The cases treated are sufficiently general that both radial gaps as well as radial return current slots are included. This allows the potential to be graded along the spiral poles with a grading distance equal to the distance between radial return slots and with a grading distance equal to the distance between the radial gaps.

*AEC Research and Development Report. Research supported by the U.S. Atomic Energy Commission, Contract No. AEC AT (11-1)-384.

I. INTRODUCTION

Magnetostatic problems containing regions of iron with isotropic properties obey the relation:

$$\nabla \cdot \mu \nabla V = 0, \tag{1}$$

where the permeability μ is considered to be a function of the magnetic field magnitude. In order to apply iterative techniques, Eq. (1) is replaced by its integral equivalent:

$$\oint_S \mu \nabla V \cdot d\vec{S} = 0. \tag{2}$$

Application of Eq. (2) to a region surrounding a standard mesh point yields the standard algorism. The surface S is determined by the mesh points neighboring the standard mesh point.

Since the regions in which permeability effects must be treated do not overlap those in which distributed currents must be handled, it is possible to find algorisms for all cases of interest in a D.C. magnet using Eq. (2) or a simple extension of it. Such cases are enumerated in detail.

II. STANDARD ALGORISM IN SPIRAL COORDINATES

In cylindrical coordinates, the line element is given by

$$d\vec{s} = \vec{i}_r\, dr + \vec{i}_\theta\, r\, d\theta + \vec{k}\, dz. \tag{3}$$

If the coordinate transformation

$$r = r_0 e^{w(\xi + N\varphi)}, \quad \theta = \varphi, \quad z = r_0 \eta e^{w(\xi + N\varphi)} \tag{4}$$

is employed, the line element in Eq. (3) becomes

$$d\vec{s} = r\left[w(\vec{i}_r+\eta\vec{k})d\xi + (wN\vec{i}_r+\vec{i}_\theta+\eta wN\vec{k})d\phi + \vec{k}d\eta\right]. \tag{5}$$

The vector areas are given by

$$d\vec{S}_\xi = r^2(wN\vec{i}_r+\vec{i}_\theta+\eta wN\vec{k})\times\vec{k}\,d\phi\,d\eta$$

or

$$d\vec{S}_\xi = r^2(\vec{i}_r - wN\vec{i}_\theta)d\phi\,d\eta, \tag{6}$$

$$d\vec{S}_\phi = wr^2\vec{k}\times(\vec{i}_r+\eta\vec{k})d\xi\,d\eta$$

or

$$d\vec{S}_\phi = wr^2\vec{i}_\theta\,d\xi\,d\eta, \tag{7}$$

and

$$d\vec{S}_\eta = wr^2(\vec{i}_r+\eta\vec{k})\times(wN\vec{i}_r+\vec{i}_\theta+\eta wN\vec{k})d\xi\,d\phi$$

or

$$d\vec{S}_\eta = wr^2(-\eta\vec{i}_r+\vec{k})d\xi\,d\phi. \tag{8}$$

In order to calculate the gradient of V, it is first expressed in cylindrical coordinates.

$$\nabla V = \vec{i}_r\frac{\partial V}{\partial r} + \vec{i}_\theta\frac{1}{r}\frac{\partial V}{\partial\theta} + \vec{k}\frac{\partial V}{\partial z}. \tag{9}$$

The spiral transformation of Eq. (4) may be used to give

$$r\frac{\partial}{\partial r} = \frac{1}{w}\frac{\partial}{\partial \xi} - \eta\frac{\partial}{\partial \eta} \ ,$$

$$\frac{\partial}{\partial \theta} = -N\frac{\partial}{\partial \xi} + \frac{\partial}{\partial \phi} \ ,$$

and

$$r\frac{\partial}{\partial z} = \frac{\partial}{\partial \eta} \ . \tag{10}$$

Equation (9) then becomes

$$\nabla V = \frac{1}{r}\left[\vec{i}_r\left(\frac{1}{w}\frac{\partial V}{\partial \xi} - \eta\frac{\partial V}{\partial \eta}\right) + \vec{i}_\theta\left(-N\frac{\partial V}{\partial \xi} + \frac{\partial V}{\partial \phi}\right) + \vec{k}\frac{\partial V}{\partial \eta}\right] . \tag{11}$$

Thus Eq. (2) becomes

$$\iint \mu r\left[\left(\frac{1}{w}\frac{\partial V}{\partial \xi} - \eta\frac{\partial V}{\partial \eta}\right) - wN\left(-N\frac{\partial V}{\partial \xi} + \frac{\partial V}{\partial \phi}\right)\right] d\phi\, d\eta$$

$$+ \iint \mu w r\left[-N\frac{\partial V}{\partial \xi} + \frac{\partial V}{\partial \phi}\right] d\xi\, d\eta$$

$$+ \iint \mu w r\left[-\eta\left(\frac{1}{w}\frac{\partial V}{\partial \xi} - \eta\frac{\partial V}{\partial \eta}\right) + \frac{\partial V}{\partial \eta}\right] d\xi\, d\phi = 0 \ , \tag{12}$$

where the brackets in Eq. (12) indicate that the expressions contained are preceded by a plus sign for the faces with a positive coordinate increment and are preceded by a negative sign for the faces with a negative coordinate increment.

For easy comparison with previous calculations[1], the following scale changes are introduced:

$$X = \frac{1}{2\pi}\xi \ , \ Y = \frac{\sqrt{\frac{1}{w^2}+N^2}}{2\pi}\eta \ , \ Z = \frac{M}{2\pi}\phi \ . \tag{13}$$

Equation (12), in these variables becomes

$$\iint \left[\frac{\partial V}{\partial X} - \frac{NM}{\mathcal{D}_0}\frac{\partial V}{\partial Z} - \frac{2\pi Y}{w\mathcal{D}_0}\frac{\partial V}{\partial Y} \right] \mu r \, dY \, dZ$$

$$+ \iint \left[-\frac{2\pi Y}{w\mathcal{D}_0}\frac{\partial V}{\partial X} + \left(1 + \frac{4\pi^2 Y^2}{\mathcal{D}_0}\right)\frac{\partial V}{\partial Y} \right] \mu r \, dX \, dZ$$

$$+ \iint \left[-\frac{MN}{\mathcal{D}_0}\frac{\partial V}{\partial X} + \frac{M^2}{\mathcal{D}_0}\frac{\partial V}{\partial Z} \right] \mu r \, dX \, dY = 0, \tag{14}$$

where

$$\mathcal{D}_0 = \frac{1}{w^2} + N^2 \tag{15}$$

and a similar interpretation is employed for the brackets.

To obtain the standard algorism relating the potential V_{000} at the standard point (0,0,0) to the potential V_{ijk} at its neighboring mesh points (ijk), one applies Eq. (14) to the unit mesh cell surrounding the point (000). In detail this becomes:

$$
\begin{aligned}
&\left\{\frac{V_{100}-V_{000}}{h}-\frac{MN}{4\mathcal{D}_0 p}\left(V_{101}+V_{001}-V_{10-1}-V_{00-1}\right)-\frac{\pi Y}{2w\mathcal{D}_0 \ell}\left(V_{110}+V_{010}-V_{1-10}-V_{0-10}\right)\right\}\frac{\mu_{100}+\mu_{000}}{2}\left(1+\pi w h\right)p\ell \\
&-\left\{\frac{V_{000}-V_{100}}{h}-\frac{MN}{4\mathcal{D}_0 p}\left(V_{-101}+V_{001}-V_{-10-1}-V_{00-1}\right)-\frac{\pi Y}{2w\mathcal{D}_0 \ell}\left(V_{-110}+V_{010}-V_{-1-10}-V_{0-10}\right)\right\}\frac{\mu_{-100}+\mu_{000}}{2}\left(1-\pi w h\right)p\ell \\
&+\left\{-\frac{\pi\left(Y+\frac{\ell}{2}\right)}{2w\mathcal{D}_0 h}\left(V_{110}+V_{100}-V_{-110}-V_{-100}\right)+\left[1+\frac{4\pi^2}{\mathcal{D}_0}\left(Y^2+Y\ell\right)\right]\left(\frac{V_{010}-V_{000}}{\ell}\right)\right\}\frac{\mu_{010}+\mu_{000}}{2}hp \\
&-\left\{-\frac{\pi\left(Y-\frac{\ell}{2}\right)}{2w\mathcal{D}_0 h}\left(V_{1-10}+V_{000}-V_{-1-10}-V_{-100}\right)+\left[1+\frac{4\pi^2}{\mathcal{D}_0}\left(Y^2-Y\ell\right)\right]\left(\frac{V_{000}-V_{0-10}}{\ell}\right)\right\}\frac{\mu_{0-10}+\mu_{000}}{2}hp \\
&+\left\{-\frac{MN}{4\mathcal{D}_0 h}\left(V_{101}+V_{100}-V_{-101}-V_{-100}\right)+\frac{M^2}{\mathcal{D}_0}\left(\frac{V_{001}-V_{000}}{p}\right)\right\}\frac{\mu_{001}+\mu_{000}}{2}\left(1+\pi w\frac{N}{M}p\right)h\ell \\
&-\left\{-\frac{MN}{4\mathcal{D}_0 h}\left(V_{10-1}+V_{100}-V_{-10-1}-V_{-100}\right)+\frac{M^2}{\mathcal{D}_0}\left(\frac{V_{000}-V_{00-1}}{p}\right)\right\}\frac{\mu_{00-1}+\mu_{000}}{2}\left(1-\pi w\frac{N}{M}p\right)h\ell = 0,
\end{aligned}
\qquad \ldots\ldots (16)
$$

where the subscripts (ijk) refer in order to mesh increments of the X, Y, Z coordinates, (hlp) being the corresponding size of the mesh units in the same coordinates.

Equation (16) may be put in the form

$$V_{000}\sum N_{ijk} = \sum N_{ijk} V_{ijk} \qquad (17)$$

but since the digital computer can handle Eq. (16) as it stands, the weights N_{ijk} in Eq. (17) will not be exhibited explicitly.

It is to be noted in passing, however, that the values of $\mathcal{N}_{ijk}$ from Eq. (16) for the case of constant permeability differ from the values of $\mathcal{N}_{ijk}$ previously found[1] although both sets of weights satisfy the moment relations.[1] This is simply an example of the fact that, whereas the moment relations are necessary conditions for the determination of the weights, these relations do not uniquely determine the weights.

If the standard point (000) is located on the face of iron, the values of μ on the various faces of the unit cell surrounding (000) must be estimated in a different manner. There are several cases involved and for each case the insides of the brackets remain the same as in Eq. (16). The cases, therefore, will be illustrated using the notation $\{+h\}$, $\{-h\}$ etc. to refer to the brackets in Eq. (16) for positive ξ-increments, negative ξ- increments, etc. Thus:

Case 1. ξ = constant face:

$$\{+h\}(1)(1+\pi w h)pl - \{-h\}\mu(1-\pi w h)pl$$

$$+\{+l\}\frac{\mu+1}{2}hp - \{-l\}\frac{\mu+1}{2}hp$$

$$+\{+p\}\frac{\mu+1}{2}\left(1+\pi w\frac{N}{M}p\right)hl - \{-p\}\frac{\mu+1}{2}\left(1-\pi w\frac{N}{M}p\right)hl = 0.$$

Interchange μ and 1 if iron is on positive side.

Case 2. η = constant face:

$$\{+h\}\frac{\mu+1}{2}(1+\pi w h)p\ell - \{-h\}\frac{\mu+1}{2}(1-\pi w h)p\ell$$

$$+\{+\ell\}(1)hp - \{-\ell\}\mu hp$$

$$+\{+p\}\frac{\mu+1}{2}\left(1+\pi w\frac{N}{M}p\right)h\ell - \{-p\}\frac{\mu+1}{2}\left(1-\pi w\frac{N}{M}p\right)h\ell = 0 .$$

Interchange μ and 1 if iron is on positive side.

Case 3. ϕ = constant face:

$$\{+h\}\frac{\mu+1}{2}(1+\pi w h)p\ell - \{-h\}\frac{\mu+1}{2}(1-\pi w h)p\ell$$

$$+\{+\ell\}\frac{\mu+1}{2}hp - \{-\ell\}\frac{\mu+1}{2}hp$$

$$+\{+p\}(1)\left(1+\pi w\frac{N}{M}p\right)h\ell - \{-p\}\mu\left(1-\pi w\frac{N}{M}p\right)h\ell = 0 .$$

Interchange μ and 1 if iron is on positive side.

Case 4. ξ = constant, η = constant edge.

$$\{+h\}(1)(1+\pi w h)p\ell - \{-h\}\frac{\mu+1}{2}(1-\pi w h)p\ell$$

$$+\{+\ell\}(1)hp - \{-\ell\}\frac{\mu+1}{2}hp$$

$$+\{+p\}\frac{\mu+3}{4}\left(1+\pi w\frac{N}{M}p\right)h\ell - \{-p\}\frac{\mu+3}{4}\left(1-\pi w\frac{N}{M}p\right)h\ell = 0 .$$

Three other variants at this relation are possible depending orientation of edge with respect to direction of $\xi-\eta$ axes. (a) interchange (1)

and $(\mu+1)/2$ in line one; interchange (1) and $(\mu+1)/2$ in line two; interchange (1) and $(\mu+1)/2$ in both line one and in line two.

Case 5. η = constant, ϕ = constant edge.

$$\{+h\}\frac{\mu+3}{4}(1+\pi w h)pl - \{-h\}\frac{\mu+3}{4}(1-\pi w h)pl$$

$$+\{+l\}(1)hp - \{-l\}\frac{\mu+1}{2}hp$$

$$+\{+p\}(1)\left(1+\pi w\frac{N}{M}p\right)hl - \{-p\}\frac{\mu+1}{2}\left(1-\pi w\frac{N}{M}p\right)hl = 0.$$

Three other variants are possible as in case 4.

Case 6. ξ = constant, ϕ = constant edge.

$$\{+h\}(1)(1+\pi w h)pl - \{-h\}\frac{\mu+1}{2}(1-\pi w h)pl$$

$$+\{+l\}\frac{\mu+3}{4}hp - \{-l\}\frac{\mu+3}{4}hp$$

$$+\{+p\}(1)\left(1+\pi w\frac{N}{M}p\right)hl - \{-p\}\frac{\mu+1}{2}\left(1-\pi w\frac{N}{M}p\right)hl = 0.$$

Three other variants are possible as in case 4.

Case 7. ξ = constant, η = constant, ϕ = constant corner

$$\{+h\}(1)(1+\pi w h)pl - \{-h\}\frac{\mu+3}{4}(1-\pi w h)pl$$

$$+\{+l\}(1)hp - \{-l\}\frac{\mu+3}{4}hp$$

$$+\{+p\}(1)\left(1+\pi w\frac{N}{M}p\right)hl - \{-p\}\frac{\mu+3}{4}\left(1-\pi w\frac{N}{M}p\right)hl = 0.$$

Seven other variants of this case are possible depending on the orientation of the corner with respect to the coordinate directions. The seven cases differ in the permutation of (1) and $(\mu+3)/4$ in all possible combinations.

III. ALGORISM IN INTERIOR REGION OF COIL

In general it is advisable to modify the potential function V of Eq. (12) in the region interior to the coil by using

$$V = U - C \,, \tag{18}$$

where C is chosen to simplify the nature of the boundary value problem.[2] The specification of the interior region of a coil is somewhat arbitrary. For our purposes it seem desirable to define this region by placing conical caps (practically plane caps) on the top and bottom extremities of the coil. The region bounded on the top and bottom by these caps and on the sides by the inner edge of the current distribution will be called the interior region of the coil. In general the interior region so defined will contain iron and air but no current.

A choice of C that is consistent with the corresponding choice of C in the presence of a current distribution and one that eliminates all double layer distributions is

$$C = -V_0 \frac{\eta - \eta_1}{\eta_2 - \eta_1} \tag{19}$$

for $\eta_1 < \eta < \eta_2$.

In this case, Eq. (12) becomes

$$\iint \mu r\left[\left(\frac{1}{w}\frac{\partial U}{\partial \xi} - \eta\frac{\partial U}{\partial \eta} - \frac{V_0 \eta}{\eta_2 - \eta_1}\right) - wN\left(-N\frac{\partial U}{\partial \xi} + \frac{\partial U}{\partial \phi}\right)\right] d\phi\, d\eta$$

$$+ \iint \mu w r\left[-N\frac{\partial U}{\partial \xi} + \frac{\partial U}{\partial \phi}\right] d\xi\, d\eta$$

$$+ \iint \mu w r\left[-\frac{\eta}{w}\frac{\partial U}{\partial \xi} + (1+\eta^2)\frac{\partial U}{\partial \eta} + (1+\eta^2)\frac{V_0}{\eta_2 - \eta_1}\right] d\xi\, d\phi = 0. \tag{20}$$

Equation (16) after modifying the potential and removing $hp/2\ell$ becomes:

$$\left\{r^2(U_{100} - U_{000}) - \frac{MNrs}{4\mathcal{D}_0}(U_{101} + U_{001} - U_{10-1} - U_{00-1}) - \frac{\pi r \ell J}{2w\mathcal{D}_0}\left(U_{110} + U_{010} - U_{1-10} - U_{0-10} + \frac{4V_0}{H}\right)\right\}(\mu_{100} + \mu_{000})(1 + \pi w h)$$

$$- \left\{r^2(U_{000} - U_{-100}) - \frac{MNrs}{4\mathcal{D}_0}(U_{-101} + U_{001} - U_{-10-1} - U_{00-1}) - \frac{\pi r \ell J}{2w\mathcal{D}_0}\left(U_{-110} + U_{010} - U_{-1-10} - U_{0-10} + \frac{4V_0}{H}\right)\right\}(\mu_{-100} + \mu_{000})(1 - \pi w h)$$

$$+ \left\{-\frac{\pi r \ell (J + \frac{1}{2})}{2w\mathcal{D}_0}(U_{110} + U_{100} - U_{-110} - U_{-100}) + \left[1 + \frac{4\pi^2 \ell^2}{\mathcal{D}_0}(J^2 + J)\right]\left(U_{010} - U_{000} + \frac{V_0}{H}\right)\right\}(\mu_{010} + \mu_{000})$$

$$- \left\{-\frac{\pi r \ell (J - \frac{1}{2})}{2w\mathcal{D}_0}(U_{1-10} + U_{100} - U_{-1-10} - U_{-100}) + \left[1 + \frac{4\pi^2 \ell^2}{\mathcal{D}_0}(J^2 - J)\right]\left(U_{000} - U_{0-10} + \frac{V_0}{H}\right)\right\}(\mu_{0-10} + \mu_{000})$$

$$+ \left\{-\frac{MNrs}{4\mathcal{D}_0}(U_{101} + U_{100} - U_{-101} - U_{-100}) + \frac{M^2 s^2}{\mathcal{D}_0}(U_{001} - U_{000})\right\}(\mu_{001} + \mu_{000})\left(1 + \pi w \frac{N}{M} p\right)$$

$$- \left\{-\frac{MNrs}{4\mathcal{D}_0}(U_{10-1} + U_{100} - U_{-10-1} - U_{-100}) + \frac{M^2 s^2}{\mathcal{D}_0}(U_{000} - U_{00-1})\right\}(\mu_{00-1} + \mu_{000})\left(1 - \pi w \frac{N}{M} p\right) = 0, \tag{21}$$

where

$$r = \frac{\ell}{h} \quad , \quad s = \frac{\ell}{p} \quad , \quad \text{and} \quad Y = \ell J \, . \tag{22}$$

For interior regions containing air, the permeability is set equal to unity.

IV. ALGORISM IN COIL REGION

Since the construction of the algorism for U_{000} exhibited in Eq. (21) is convenient from the point of view of numerical computation, the results of MURA-591 for infinite permeability are put in a similar form. Thus, if one defines the square bracket $[\frac{1}{2}]$ to mean

$$\left[\tfrac{1}{2}\right] \equiv \begin{bmatrix} (I_4 - I - \frac{1}{2})/W \\ (K_4 - K)/B \\ (I + \frac{1}{2} - I_1)/W \\ (K - K_1)/B \end{bmatrix} ,$$

and the bracket $[0]$ to mean

$$[0] \equiv \begin{bmatrix} (I_4 - I)/W \\ (K_4 - K)/B \\ (I - I_1)/W \\ (K - K_1)/B \end{bmatrix} ,$$

$$
\begin{aligned}
&\left\{-\frac{2\pi V_0 r \ell J}{\mathcal{D}_0 H w}\left[\tfrac{1}{2}\right] + r^2\left(U_{100}-U_{000}\right) - \frac{MNrs}{4\mathcal{D}_0}\left(U_{101}+U_{001}-U_{10-1}-U_{00-1}\right) - \frac{\pi r \ell J}{2 w \mathcal{D}_0}\left(U_{110}+U_{010}-U_{1-10}-U_{0-10}\right)\right\}\left(1+\pi w h\right) \\
&-\left\{-\frac{2\pi V_0 r \ell J}{\mathcal{D}_0 H w}\left[-\tfrac{1}{2}\right] + r^2\left(U_{000}-U_{-100}\right) - \frac{MNrs}{4\mathcal{D}_0}\left(U_{-101}+U_{001}-U_{-10-1}-U_{00-1}\right) - \frac{\pi r \ell J}{2 w \mathcal{D}_0}\left(U_{-110}+U_{010}-U_{-1-10}-U_{0-10}\right)\right\}\left(1-\pi w h\right) \\
&+\left\{-\frac{MNrs}{4\mathcal{D}_0}\left(U_{101}+U_{100}-U_{-101}-U_{-100}\right) + \frac{M^2 s^2}{\mathcal{D}_0}\left(U_{001}-U_{000}\right)\right\}\left(1+\pi w \frac{N}{M} p\right) \\
&-\left\{-\frac{MNrs}{4\mathcal{D}_0}\left(U_{10-1}+U_{100}-U_{-10-1}-U_{-100}\right) + \frac{M^2 s^2}{\mathcal{D}_0}\left(U_{000}-U_{00-1}\right)\right\}\left(1-\pi w \frac{N}{M} p\right) \qquad (23) \\
&+\left\{\frac{V_0}{H}\left[1+\frac{4\pi^2\ell^2}{\mathcal{D}_0}\left(J^2+J\right)\right]\left[0\right] - \frac{\pi r \ell\left(J+\frac{1}{2}\right)}{2 w \mathcal{D}_0}\left(U_{110}+U_{100}-U_{-110}-U_{-100}\right) + \left[1+\frac{4\pi^2\ell^2}{\mathcal{D}_0}\left(J^2+J\right)\right]\left(U_{010}-U_{000}\right)\right\} \\
&-\left\{\frac{V_0}{H}\left[1+\frac{4\pi^2\ell^2}{\mathcal{D}_0}\left(J^2-J\right)\right]\left[0\right] - \frac{\pi r \ell\left(J-\frac{1}{2}\right)}{2 w \mathcal{D}_0}\left(U_{1-10}+U_{100}-U_{-1-10}-U_{-100}\right) + \left[1+\frac{4\pi^2\ell^2}{\mathcal{D}_0}\left(J^2-J\right)\right]\left(U_{000}-U_{0-10}\right)\right\} = 0,
\end{aligned}
$$

where the first two braces refer to the contributions from the (ϕ, η) surface for positive and negative increments of ξ ; the second two braces refer to contributions from the (ξ, η) surface for positive and negative increments of ϕ , and the last two braces refer to the contributions from the (ξ, ϕ) surface for positive and negative increments of η . The bracket notation as in MURA-591 refers to the four regions of the coil. See Fig. 1 for clarification of coordinate notation.

V. ALGORISM IN CURRENT CARRYING SLOT

The algorism centered in a radial current carrying slot in real iron whose width is less than one p-mesh unit may be found as above except that an effective μ must be found for the direction perpendicular to the slot. Consider the following air-iron boundary

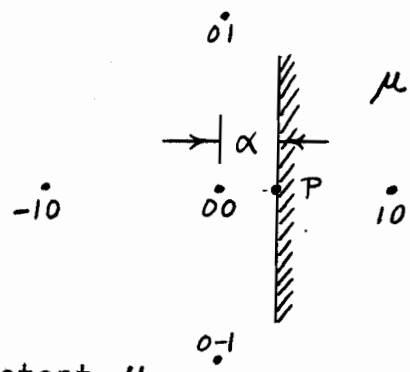

for the case of constant μ .

The flux passing in the 00 → 10 direction in the air is

$$\frac{V_P - V_{00}}{\alpha}$$

and in the iron is

$$\frac{V_{10} - V_P}{1-\alpha}\,\mu \quad .$$

Since these expressions for the flux are equal, V_P may be eliminated to give for the flux

$$\bar{\mu}\left(V_{10} - V_{00}\right) \quad ,$$

where

$$\bar{\mu} = \frac{\mu}{1+\alpha(\mu-1)} \quad .$$

This is the effective permeability that is required.

The algorism thus becomes, after defining for convenience,

$$(n) \equiv \left\{ V_n\left[\mu - (\mu-1)B_s\right] + V_{n-1}\left[\mu - (\mu+1)B_s\right] \right\} \quad ,$$

$$\left\{-\frac{\pi r l J}{\mathcal{D}_0 H w}(n)+r^2\left(U_{100}-U_{000}\right)\left[\mu-(\mu-1)B_s\right]-\frac{MNrs}{4\mathcal{D}_0}\left(U_{101}+U_{001}-U_{10-1}-U_{00-1}\right)\bar{\mu}-\frac{\pi r l J}{2w\mathcal{D}_0}\left(U_{110}+U_{010}-U_{1-10}-U_{0-10}\right)\left[\mu-(\mu-1)B_s\right]\right\}\left(1+\pi w h\right)$$

$$-\left\{-\frac{\pi r l J}{\mathcal{D}_0 H w}(n)+r^2\left(U_{000}-U_{-100}\right)\left[\mu-(\mu-1)B_s\right]-\frac{MNrs}{4\mathcal{D}_0}\left(U_{-101}+U_{001}-U_{-10-1}-U_{00-1}\right)\bar{\mu}-\frac{\pi r l J}{2w\mathcal{D}_0}\left(U_{-110}+U_{010}-U_{-1-10}-U_{0-10}\right)\left[\mu-(\mu-1)B_s\right]\right\}\left(1-\pi w h\right)$$

$$+\left\{-\frac{MNrs}{4\mathcal{D}_0}\left(U_{101}+U_{100}-U_{-101}-U_{-100}\right)+\frac{M^2s^2}{\mathcal{D}_0}\left(U_{001}-U_{000}\right)\bar{\mu}\right\}\left(1+\pi w\frac{N}{M}p\right)$$

$$-\left\{-\frac{MNrs}{4\mathcal{D}_0}\left(U_{10-1}+U_{100}-U_{-10-1}-U_{-100}\right)+\frac{M^2s^2}{\mathcal{D}_0}\left(U_{000}-U_{00-1}\right)\bar{\mu}\right\}\left(1-\pi w\frac{N}{M}p\right)$$

$$+\left\{\frac{1}{2H}\left[1+\frac{4\pi^2 l^2}{\mathcal{D}_0}\left(J^2+J\right)\right](n)-\frac{\pi r l\left(J+\frac{1}{2}\right)}{2w\mathcal{D}_0}\left(U_{110}+U_{100}-U_{-110}-U_{-100}\right)\left[\mu-(\mu-1)B_s\right]+\left[1+\frac{4\pi^2 l^2}{\mathcal{D}_0}\left(J^2+J\right)\right]\left(U_{010}-U_{000}\right)\left[\mu-(\mu-1)B_s\right]\right\}$$

$$-\left\{\frac{1}{2H}\left[1+\frac{4\pi^2 l^2}{\mathcal{D}_0}\left(J^2-J\right)\right](n)-\frac{\pi r l\left(J-\frac{1}{2}\right)}{2w\mathcal{D}_0}\left(U_{1-10}+U_{100}-U_{-1-10}-U_{-100}\right)\left[\mu-(\mu-1)B_s\right]+\left[1+\frac{4\pi^2 l^2}{\mathcal{D}_0}\left(J^2-J\right)\right]\left(U_{000}-U_{0-10}\right)\left[\mu-(\mu-1)B_s\right]\right\}=0\ .$$

For the part of the coil in region IV adjacent to air, replace the μ in the above equation by $\mu = 1$. In the iron it is expected that sufficient accuracy will be obtained if all terms containing J or J^2 are dropped. In addition the parentheses containing h and p may be set equal to unity. Similar simplifications also apply to Eqs. (16) and (21).

In this case

$$\bar{\mu} = \frac{\mu}{1 + \frac{B_s}{2}(\mu - 1)} \quad \text{and} \quad \mu = \frac{1}{2}\left(\mu_{001} + \mu_{00-1}\right) . \tag{25}$$

Note that B_s is the relative width of the slot in units of p. V_n is 4π times the sum of the abampere-turns for all coils surrounding the nth pole, and V_{n-1} is the same quantity for the pole adjacent to the nth pole on the low potential side.

In certain special cases, for example air-iron boundaries and copper-air boundaries, it is necessary to use mixtures of Eqs. (16), (22), and (23). These are not illustrated. In the iterative procedure, the value of μ at any point in the iron is calculated from the empirical relation:

$$\mu = \frac{A + H}{B + H} , \tag{26}$$

where H is the magnitude of the magnetic field. Thus from Eq. (11)

$$H^2 = \frac{\mathcal{D}_0}{4\pi^2 r^2}\left\{\left(\frac{\partial V}{\partial X}\right)^2 + \frac{M^2}{\mathcal{D}_0}\left(\frac{\partial V}{\partial Z}\right)^2 + \left[1 + \frac{4\pi^2 Y^2}{\mathcal{D}_0}\right]\left(\frac{\partial V}{\partial Y}\right)^2 - \frac{2\pi Y}{w\mathcal{D}_0}\frac{\partial V}{\partial X}\frac{\partial V}{\partial Y} - \frac{2NM}{\mathcal{D}_0}\frac{\partial V}{\partial X}\frac{\partial V}{\partial Z}\right\}. \tag{27}$$

Using the simplest algorisms for the derivatives Eq. (27) becomes

$$H^2 = \frac{\mathcal{D}_0}{4\pi^2 r^2}\left\{\left(\frac{V_{100}-V_{-100}}{2h}\right)^2 + \frac{M^2}{\mathcal{D}_0}\left(\frac{V_{001}-V_{00-1}}{2p}\right)^2 + \left[1 + \frac{4\pi^2 \ell^2 J^2}{\mathcal{D}_0}\right]\left(\frac{V_{010}-V_{00-1}}{2\ell}\right)^2 - \frac{2\pi \ell J}{w\mathcal{D}_0}\left(\frac{V_{100}-V_{-100}}{2h}\right)\left(\frac{V_{010}-V_{0-10}}{2\ell}\right) - \frac{2MN}{\mathcal{D}_0}\left(\frac{V_{100}-V_{-100}}{2h}\right)\left(\frac{V_{001}-V_{00-1}}{2p}\right)\right\}. \tag{28}$$

Finally it is to be noticed that the solution of the algorisms for the case of infinite permeability when subjected to the integral scaling boundary conditions[2] yields an integral scaling potential. On the other hand, in the case of finite permeability, application of the integral scaling boundary conditions gives a solution which does not possess integral scaling. It is expected, however, that, if the integral scaling boundary conditions are applied between boundaries on which the potential is small, the solution within each individual

cell is essentially correct. Thus the extent of the deviation from integral scaling may be determined by comparing homologous points of relatively high potential in adjacent cells. The problem remaining is then to find what sheet currents must be placed on the iron surfaces to restore the property of integral scaling. This consideration will be studied at a later date.

REFERENCES

1. Relaxation Calculation of Integral Scaling Magnetic Fields Produced by Distributed Currents, MURA-591, S.C. Snowdon (1960).

2. Integral Scaling Magnetic Field Using Distributed Currents, MURA-583, S.C. Snowdon (1960).

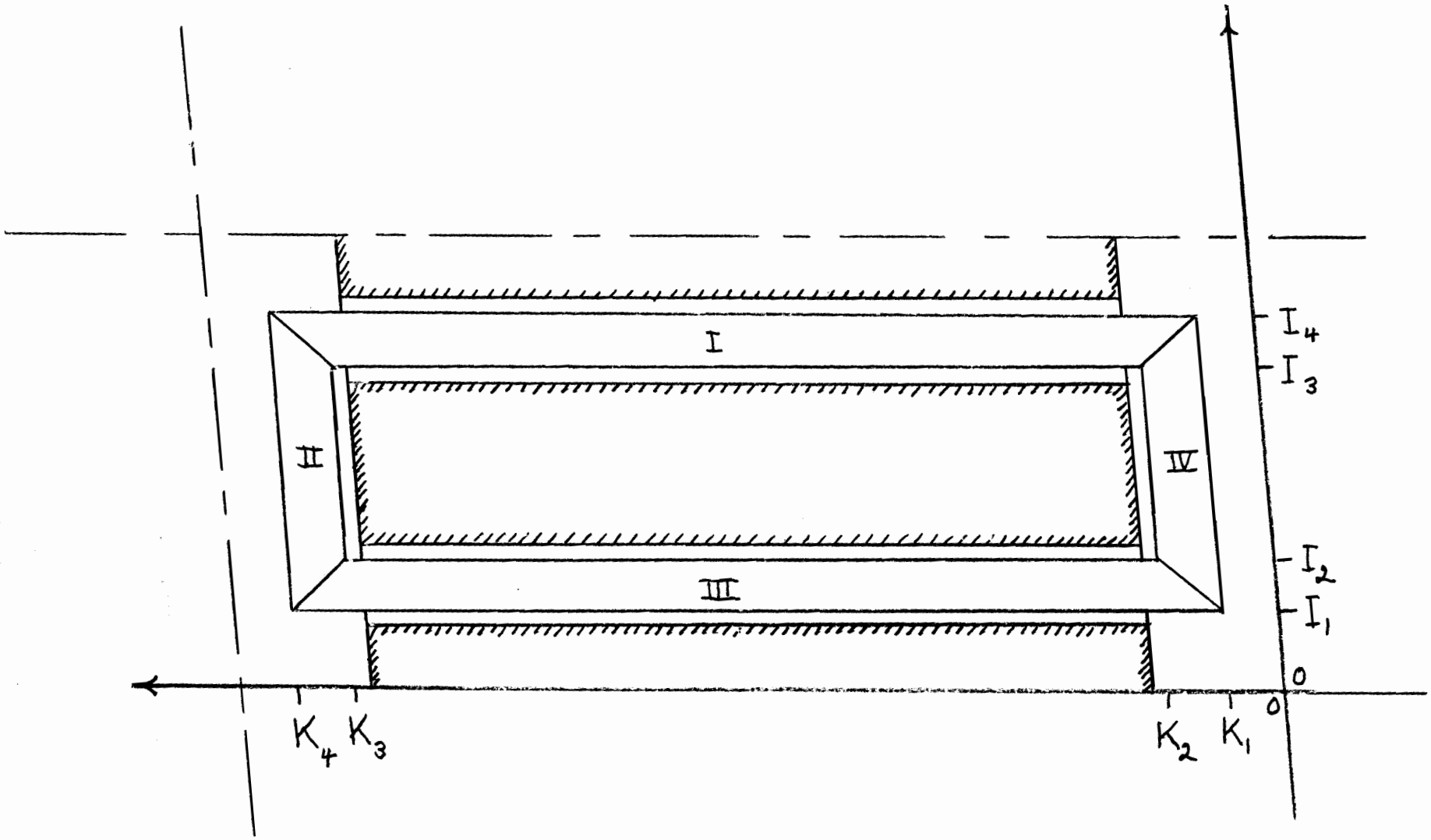

FIG.1 POLE FACE UNIT CELL