Fermilab Library
0 1160 0038843 3

558

MIDWESTERN UNIVERSITIES RESEARCH ASSOCIATION

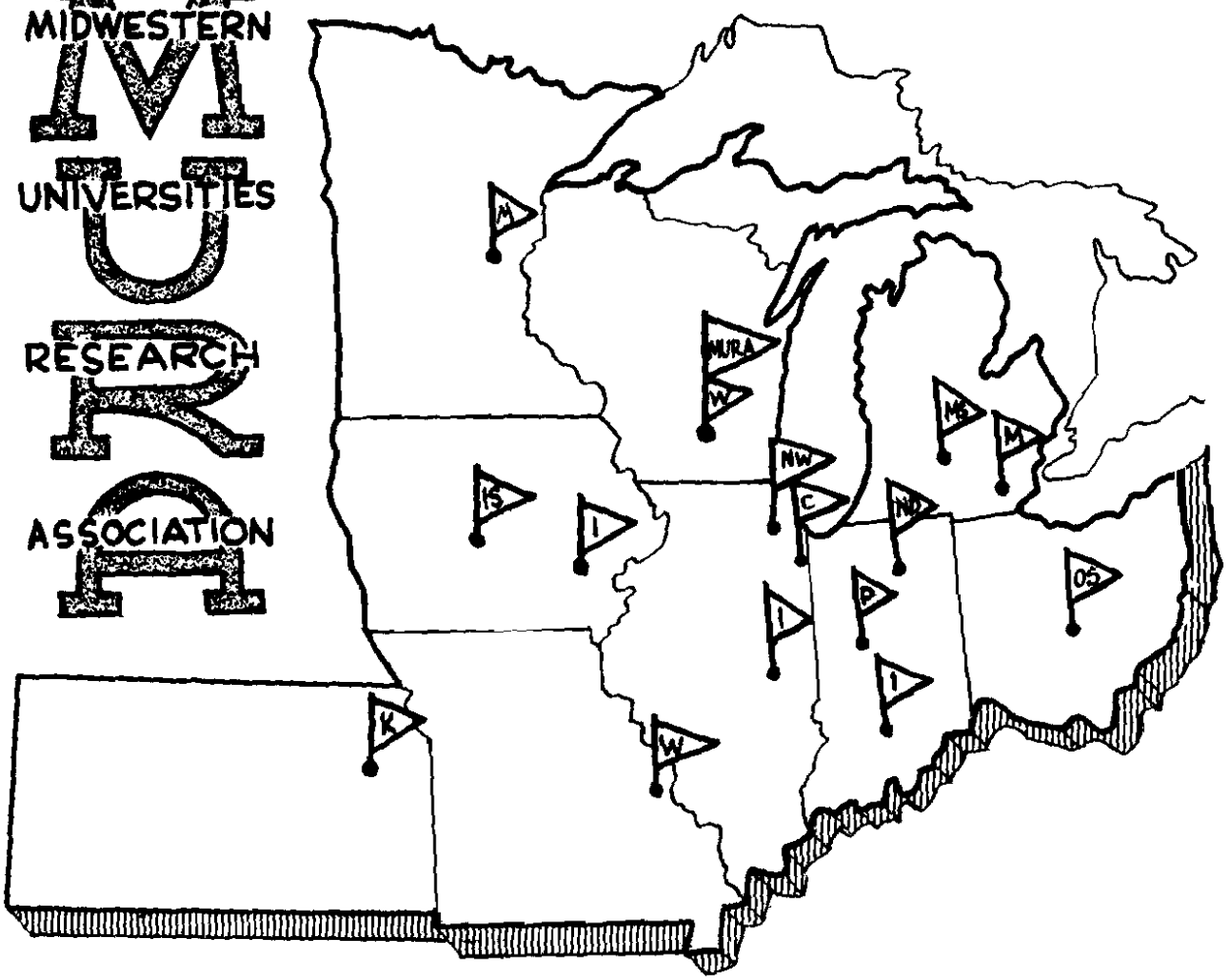

ON ROBINSON'S MULTIPLE FREQUENCY ACCELERATOR

G. Bronca

REPORT NUMBER 558

MURA-558
UC-28, Particle Accelerators and
High Voltage Machines
TID-4500(14th Edition)

MIDWESTERN UNIVERSITIES RESEARCH ASSOCIATION*
2203 University Avenue, Madison, Wisconsin

ON ROBINSON'S MULTIPLE FREQUENCY ACCELERATOR

G. Bronca**

February 4, 1960

ABSTRACT

The effects on the accelerated particles of the frequencies, other than the bucket frequency, are studied both analytically and with the computer. Particles near the separatix are lost when adjacent frequencies are too close to the bucket frequency. An expression for the beam intensity is given and compared with the case of frequency modulated cavities. The duty cycle at injection is shown to be high, 10 to 30 percent, for a constant current injector.

*AEC Research and Development Report. Research supported by the U. S. Atomic Energy Commission, Contract No. AT(11-1)-384.

**On leave from Centre d'Etudes Nucléaires, Saclay, France.

I. PRINCIPLE OF ROBINSON'S SCHEME

In the usual acceleration scheme, particles are accelerated by a set of cavities whose parameters, $V(t)$ and $f(t)$, are represented in Figure 1. The intensity we get, on the assumption that the emittance of the injector is the limiting factor, is proportional to the phase flux which is $\frac{A}{T}$ where A is the bucket area and T the period of repetition of the cycle. It is possible to get more intensity if we can find some other sets of cavities whose voltages and frequencies vary in time as shown on Figure 2. If it is assumed that there is no effect on one accelerated bucket of the rf voltages associated with other buckets, then the phase flux will be $\frac{A}{\tau}$ which is $\frac{T}{\tau}$ times the phase flux in the case of only one set of cavities. The smaller τ is, the higher is the intensity (and the number of the separate fm rf voltages). This leads to a very large number of frequency modulated voltages and a very high cost for the machine if each is supplied by a separate cavity. Robinson[1] remarked that the particle experiences a voltage

$$\vartheta = \sum_{m=1}^{N} V(t-m\tau)\, e^{i\int 2\pi f(t-m\tau)\,dt} \tag{1}$$

periodic with the period τ. (N is the number of frequency modulated sets $N = \frac{T}{\tau}$.) Therefore we can expand ϑ in Fourier series

$$\vartheta = \sum_{-\infty}^{\infty} V_n\, e^{i2\pi n\frac{t}{\tau}} \tag{2}$$

where

$$V_n = \frac{1}{\tau}\int_0^{\tau} \sum_{m=1}^{N} V(t-m\tau)\, e^{2\pi i\left[\int f(t-m\tau)dt - n\frac{t}{\tau}\right]}\, dt \,. \tag{3}$$

Note that actually it is not necessary to write the Fourier series with an infinite number of terms, as we know that the frequencies very different from the particle frequency have a zero average effect. We shall limit the expansion to the n values which give frequencies inside the range of frequency modulation.

It is easy to see that (3) can be written

$$V_n = \frac{1}{\tau}\int_0^{N\tau} V(t)\; e^{2\pi i\left[\int f(t)\,dt - n\frac{t}{\tau}\right]}\,dt \quad . \tag{4}$$

In the general case we cannot integrate to find the expression for V_n but if we assume for purposes of analysis

$$V(t) = V \tag{5}$$

$$f(t) = \dot{f}\,t + b \quad , \tag{6}$$

then

$$V_n = \frac{V}{\tau}\int_0^{N\tau} e^{2\pi i\left[\dot{f}\frac{t^2}{2} + \left(b - \frac{n}{\tau}\right)t\right]}\,dt \quad . \tag{7}$$

Using the relations

$$\int_0^{N\tau} e^{2\pi i\left[\dot{f}\frac{t^2}{2} + \left(b-\frac{n}{\tau}\right)t\right]}\,dt \simeq \int_{-\infty}^{+\infty} e^{2\pi i\left[\dot{f}\frac{t^2}{2} + \left(b-\frac{n}{\tau}\right)t\right]}\,dt = \frac{e^{-i\frac{\pi}{\dot{f}}\left(b-\frac{n}{\tau}\right)^2}}{\sqrt{\pi\dot{f}}}(1+i)\sqrt{\frac{\pi}{2}} \tag{8}$$

for the frequencies lying in the range of modulation,

$$V_n = \frac{V}{\tau\sqrt{\dot{f}}}\; e^{-i\left[\frac{\pi}{\dot{f}}\left(b-\frac{n}{\tau}\right)^2 - \frac{\pi}{4}\right]} \quad .$$

(The approximation in the integral is not valid for frequencies close to the edge of the range. In this case, we have to take the exact value of the integral given by tables.) Therefore the voltage V_c on the constant frequency cavity is

(9)

and the phase φ_2, which is defined as the coefficient of n^2 in the exponential, is

$$\varphi_2 = \frac{\pi}{f\tau^2} \quad . \tag{10}$$

These relations are those given by Robinson[1].

II. EFFECTS OF THE MULTIPLE FREQUENCIES ON THE ACCELERATED BUCKET

It was assumed that only the frequency equal to the bucket's frequency has an effect on the accelerated particle. This is true when the other frequencies are very different. But in the case of high repetition rate, there is interaction between buckets and we have to determine the lowest value of the period before particles are lost.

MURA-106 gives the expression for the Hamiltonian of the motion in the general case of many different frequency cavities. In that report, the oscillating terms given by the frequencies far from the bucket had no average effects and were neglected. In our case we have to keep these terms. We do the calculation for just three frequencies. It is easy to generalize to a larger number.

From MURA-106[2] equation (28), the Hamiltonian becomes for three frequencies f_1, f_2, f_3 where f_2 is the synchronous frequency,

$$\begin{aligned} H^* = {} & 2\pi E + \frac{\pi}{h} A_2 \cos h\,\Theta^* - 2\pi \frac{f_2}{h} W \\ & + \sum_{j=1}^{3} \frac{\pi}{h} A_j \cos h\left[\Theta^* + \frac{2\pi}{h}\int (f_2 + f_j)\,dt + \alpha_2 + \alpha_j + \frac{\beta_2}{h} - \frac{\beta_j}{h}\right] \\ & + \sum_{j=1}^{3} \frac{\pi}{h} A_j \cos h\left[\Theta^* + \frac{2\pi}{h}\int (f_2 - f_j)\,dt + \alpha_2 - \alpha_j + \frac{\beta_2}{h} - \frac{\beta_j}{h}\right] . \end{aligned} \tag{11}$$

Note we have added a phase α_j in the definition of the electric field in equation (22) of reference 2.

We introduce the new variable W^* defined by

$$W^* = W - W_2 \tag{12}$$

where W_2 is given by

$$f_2(W_2) = \frac{f_2}{h} \quad . \tag{13}$$

For this canonical transformation, the generating function is

$$S = -\Theta^*(W - W_2) \tag{14}$$

and the Hamiltonian becomes

$$H^{**} = 2\pi E - 2\pi \frac{f_2}{h} W^* + \frac{V}{2} \cos h\Theta^* + \dot{W}_2 \Theta^*$$

$$+ \sum_{j=1}^{3} \frac{V}{h} \cos h\left[\Theta^* + \frac{2\pi}{h}\int (f_2 - f_j)\, dt + \alpha_2 - \alpha_j + \frac{\beta_2}{h} - \frac{\beta_j}{h}\right]$$

$$+ \sum_{j=1}^{3} \frac{V}{h} \cos h\left[\Theta^* + \frac{2\pi}{h}\int (f_2 + f_j)\, dt + \alpha_2 + \alpha_j + \frac{\beta_2}{h} - \frac{\beta_j}{h}\right] , \tag{15}$$

where terms independent of W^* or Θ^* have been omitted and πA_j have been replaced by V.

The last series is rapidly oscillating and may be neglected. If we write

$$f_3 - f_2 = f_2 - f_1 = \Delta f \tag{16}$$

$$f_2 = f \tag{17}$$

$$\alpha_2 - \alpha_j = \delta_j \tag{18}$$

$$\beta_2 - \beta_j = \varepsilon_j \quad , \tag{19}$$

we obtain

$$H^{**} = 2\pi E' W^* - 2\pi \frac{f}{h} W^* + W_s \Theta^* + \frac{V}{h} \cos h\Theta^*$$
$$+ \frac{V}{h} \cos\left[h\Theta^* + 2\pi \int \Delta f\, dt + \delta_1 + \varepsilon_1\right]$$
$$+ \frac{V}{h} \cos\left[h\Theta^* - 2\pi \int \Delta f\, dt + \delta_3 + \varepsilon_3\right] . \tag{20}$$

As in MURA-106, we write

$$E = E_s + f W^* + \frac{1}{2} f_s' W^{*2} + \dots \tag{21}$$

The equations of motion become

$$\dot{\Theta}^* = 2\pi f_s' W^*$$
$$\dot{W}^* = -\dot{W}_2 + V \sin h\Theta^*$$
$$+ V \sin\left[h\Theta^* + 2\pi \int \Delta f\, dt + \varepsilon_1 + \delta_1\right]$$
$$+ V \sin\left[h\Theta^* - 2\pi \int \Delta f\, dt + \varepsilon_3 + \delta_3\right] . \tag{22}$$

The two last terms were not in Symon-Sessler's formula[1] and represent the effect of the frequencies f_2 and f_3 on the bucket.

If we assume f is a linear function of time, and phase oscillations are small

$$\int \Delta f\, dt = \Delta f t \tag{23}$$

$$\Delta\varphi = \varphi - \varphi_s = h\left(\Theta^* - \Theta_s^*\right) \tag{24}$$

where φ_s is defined by

$$\dot{W}_2 = V \sin \varphi_s \quad , \tag{25}$$

it turns out that

$$\Delta\ddot{\varphi} = \Delta\varphi\left[2\pi h f_s' V \cos\varphi_s + 4\pi h f_s' V \cos\left(\varphi_s + \frac{\delta_1+\delta_3}{2} + \frac{\varepsilon_1+\varepsilon_3}{2}\right)\cos\left(2\pi\Delta f t + \frac{\delta_1-\delta_3}{2} + \frac{\varepsilon_1-\varepsilon_3}{2}\right)\right]$$
$$+ 4\pi h f_s' V \sin\left(\varphi_s + \frac{\delta_1+\delta_3}{2} - \frac{\varepsilon_1+\varepsilon_3}{2}\right) \cos\left(2\pi\Delta f t + \frac{\delta_1-\delta_3}{2} + \frac{\varepsilon_1-\varepsilon_3}{2}\right) . \tag{26}$$

If we write

$$\Omega^2 = -2\pi R\, f_s' V \cos\varphi_s \tag{27}$$

$$\gamma = \frac{\delta_1 + \delta_3 + \varepsilon_1 + \varepsilon_3}{2} \tag{28}$$

$$\mu = \frac{\delta_1 - \delta_3 + \varepsilon_1 - \varepsilon_3}{2} \quad , \tag{29}$$

then equation (26) becomes

$$\Delta\ddot{\varphi} + \left[\Omega^2 + 2\Omega^2 \frac{\cos(\varphi_s+\gamma)}{\cos\varphi_s} \cos\left(2\pi\Delta f t + \mu\right)\right] \Delta\varphi = -2\Omega^2 \frac{\sin(\varphi_s+\gamma)}{\cos\varphi_s} \cos\left(2\pi\Delta f t + \mu\right) . \tag{30}$$

Equation (30) is of the Mathieu type with a forced term.

The smooth approximation applies for the left-hand side when Δf is not too small, i.e.,

$$\frac{\Omega^2 \cos(\varphi_s+\gamma)}{(2\pi\Delta f)^2 \cos\varphi_s} \ll 1 \tag{31}$$

Then the solution of the homogeneous equation is

$$\Delta\varphi = A \left\{ \begin{aligned} &\cos\left(\nu t + \frac{\nu\mu}{2\pi\Delta f} + \theta\right) \\ &+ \frac{\Omega^2 \cos(\varphi_s+\gamma)}{\cos\varphi_s\left[(2\pi\Delta f)^2 + 2\pi\Delta f\, 2\nu\right]} \cos\left[(\nu + 2\pi\Delta f)t + \mu + \frac{\nu\mu}{2\pi\Delta f} + \theta\right] \\ &+ \frac{\Omega^2 \cos(\varphi_s+\gamma)}{\cos\varphi_s\left[(2\pi\Delta f)^2 - 2\pi\Delta f\, 2\nu\right]} \cos\left[(\nu - 2\pi\Delta f)t - \mu + \frac{\nu\mu}{2\pi\Delta f} + \theta\right] \end{aligned} \right\} \tag{32}$$

with

$$\nu^2 = \Omega^2\left[1 + 2\frac{\Omega^2 \cos^2(\varphi_s+\gamma)}{\cos^2\varphi_s\,(2\pi\Delta f)^2}\right] . \tag{33}$$

To get equation (32) we have

1. to change variable t to t_1 by

$$2\pi\Delta f + \mu = 2\pi\Delta f\, t_1 \tag{34}$$

2. to write a Floquet solution u

$$u = e^{i\nu t_1}\left[1 + \frac{\Omega^2\cos(\varphi_s+\gamma)}{\left[(2\pi\Delta f)^2 + 2\pi\Delta f\, 2\nu\right]\cos\varphi_s}\, e^{i2\pi\Delta f t_1} + \frac{\Omega^2\cos(\varphi_s+\gamma)}{\left[(2\pi\Delta f)^2 - 2\pi\Delta f\, 2\nu\right]\cos\varphi_s}\, e^{-i2\pi\Delta f t_1}\right] \tag{35}$$

3. to write the general solution

$$\Delta\varphi = A e^{i\theta} u + A e^{-i\theta} u^* \tag{36}$$

where A and θ correspond to initial conditions.

The forced term is calculated by harmonic balance

$$\Delta\varphi = \frac{2\Omega^2\sin(\varphi_s+\gamma)}{\left[(2\pi\Delta f)^2 + 2\Omega^2\frac{\cos^2(\varphi_s+\gamma)}{\cos^2\varphi_s} - \Omega^2\right]\cos\varphi_s}\left[-\frac{\cos(\varphi_s+\gamma)}{\cos\varphi_s} + \cos(2\pi\Delta f t + \mu)\right] \tag{37}$$

and the general solution of equation (30) is the sum of (32) and (37).

From (22) we get the expression for the momentum

$$\Delta\varphi = B\left\{\begin{array}{l} \sin\left[\nu t + \frac{\nu\mu}{2\pi\Delta f} + \theta\right] \\ + \frac{\Omega^2\cos(\varphi_s+\gamma)(\nu+2\pi\Delta f)}{\nu\left[(2\pi\Delta f)^2 + 2\pi\Delta f\, 2\nu\right]\cos\varphi_s}\sin\left[(\nu+2\pi\Delta f)t + \mu + \frac{\nu\mu}{2\pi\Delta f} + \theta\right] \\ + \frac{\Omega^2\cos(\varphi_s+\gamma)(\nu-2\pi\Delta f)}{\nu\left[(2\pi\Delta f)^2 - 2\pi\Delta f\, 2\nu\right]\cos\varphi_s}\sin\left[(\nu-2\pi\Delta f)t - \mu + \frac{\nu\mu}{2\pi\Delta f} + \theta\right] \end{array}\right\}$$
$$- \frac{2\Omega^2\sin(\varphi_s+\gamma)\; 2\pi\Delta f}{2\pi h f_s'\left[(2\pi\Delta f)^2 + 2\Omega^2\frac{\cos^2(\varphi_s+\gamma)}{\cos^2\varphi_s} - \Omega^2\right]\cos\varphi_s}\sin(2\pi\Delta f t + \mu) \tag{38}$$

where
$$B = -\frac{A\nu}{2\pi h f_s'} \tag{39}$$

A resonance appears in the forced term for

$$\Delta f_{RF} = \frac{\Omega}{2\pi}\left[1 - \frac{2\cos^2(\varphi_s+\gamma)}{\cos^2\varphi_s}\right]. \tag{40}$$

(The subscript RF refers to RF frequency while subscript s refers to particle frequency.)

If we use the dimensionless variable y defined in MURA-106

$$y = \left(\frac{2\pi R K}{V E}\right)^{1/2} f_s W^* \quad . \tag{41}$$

then from

$$\left(\frac{\Delta f}{f}\right)_{RF} = K \frac{\Delta E}{E} = \frac{K f_s}{E} \Delta W^* \tag{42}$$

we get

$$\left(\frac{\Delta f}{f}\right)_{RF} = \left(\frac{K V}{2\pi R E}\right)^{1/2} \Delta y \quad . \tag{43}$$

ΔW^* and Δy are the difference in W and y between two simultaneously accelerated buckets (Fig. 3). The resonance relation becomes

$$\Delta y = \left(|\cos\varphi_s|\right)^{1/4}\left(1 - \frac{2\cos^2(\varphi_s+\gamma)}{\cos^2\varphi_s}\right)^{1/2} \quad . \tag{44}$$

Calculations were done with the computer for $\varphi_s = \frac{3\pi}{4}$, $\Delta y = 5$ $\alpha_1 = \pi$, $\alpha_3 = 0$, $\beta_1 = \beta_2 = \beta_3 = 0$. The results shown on Fig. 4 and Fig. 5 for different initial conditions are in agreement with analytical calculation.

For large phase amplitude, analytical calculations do not hold but particles have qualitatively the same behavior. Figures 6 and 7 represent oscillations for large phase amplitude. Particles near the separatrix are lost when Δy (or Δf) become too small. There is a limit value of Δy (~ 5) under which the area of the accelerated bucket decreases. The next step is to calculate how the area varies with Δy for several values of Γ .

III. BEAM INTENSITY

If the emittance of the injector is the limiting factor, the beam intensity is proportional to the phase flux

$$\Phi = A_m \frac{1}{\tau} \alpha_4(\Delta y, \Gamma) \quad . \tag{45}$$

A_m is the area of the frequency modulated bucket and α_4 is a coefficient describing how the bucket area decreases for small Δy. α_4 is equal to 1 for large Δy. If we use (9) and the expression for the bucket area [reference 2, formula (80)]

$$A_m = \frac{8}{f_s}\sqrt{\frac{2VE}{\pi h \kappa}}\,\alpha_3(\Gamma) \quad , \tag{46}$$

it turns out that

$$\Phi = \frac{8}{f_s}\sqrt{\frac{2}{\pi}\frac{V_c E \tau \sqrt{f}}{h \kappa}}\,\frac{1}{\tau}\,\alpha_3(\Gamma)\cdot\alpha_4(\Delta y, \Gamma) \tag{47}$$

and with the relation

$$\dot{f}_{HF} = h \dot{f}_s = h \frac{f_s^2}{E} \kappa V \Gamma \tag{48}$$

$$= h \frac{f_s^2}{E} \kappa V_c \sqrt{f}\, \tau \Gamma \tag{49}$$

$$\Phi = 8\sqrt{\frac{2}{\pi}}\, V_c\, \Gamma^{1/2}\, \alpha_3(\Gamma)\, \alpha_4(\Delta y, \Gamma) \quad . \tag{50}$$

For a given voltage and in the case where α_4 does not vary very much with Γ, Φ is maximum for $\left[\Gamma^{1/2}\cdot\alpha_3(\Gamma)\right]_{max}$

$$\Gamma \simeq .25 \quad . \tag{51}$$

Note that Φ seems to be independent of the number N of cavities, but actually the choice of Γ determines N. It is interesting to compare (50) with the phase flux Φ_m. We get with the same voltages V_c and

number of cavities N but in the case of frequency modulated cavities, each carrying its own bucket and starting from injection one after another

$$\Phi_m = \frac{1}{\tau_m}\frac{8}{f_s}\sqrt{\frac{2}{\pi}\frac{V_c E}{h\mathcal{K}}}\,\alpha_3(\Gamma)\,\alpha_1(\Delta y, \Gamma) \quad . \tag{52}$$

Here τ_m is different from the period of repetition in Robinson's scheme because the voltages on the buckets are not identical.

τ_m is calculated in the following way.

Using (48) and (43) and

$$\tau = \left(\frac{\Delta f}{\dot{f}}\right)_{RF} \tag{53}$$

equation (9) becomes

$$V_c = (2\pi)^{1/2}\, V\, \frac{\Gamma^{1/2}}{\Delta y} \tag{54}$$

and τ is in Robinson's case

$$\tau_R = (2\pi)^{-1/4}\left(\frac{h f^2 \mathcal{K} V_c}{E}\right)^{-1/2} \Gamma_R^{-3/4}\, \Delta y_R^{1/2} \quad . \tag{55}$$

τ_R is related to the number of frequencies by

$$N = (f_M - f_i)\,\tau_R \tag{56}$$

$f_M - f_i$ is the range of revolution frequencies.

In the frequency modulated case

$$\tau_m = \frac{f_M - f_i}{N}\cdot\frac{1}{\dot{f}_m} = \frac{1}{\tau_R\,\dot{f}_m} \quad , \tag{57}$$

where $\dot{f}_m$ is given for (48) with $V = V_c$, so

$$\tau_m = \left(\frac{2\pi}{f_s}\right)^{1/4}\left(\frac{E}{h\mathcal{K}V_c}\right)^{1/2}\frac{\Gamma_R^{3/4}}{\Gamma}\,\Delta y_R^{-1/2} \tag{58}$$

and

$$\Phi_m = 8\left(\frac{2}{\pi^3}\right)^{1/4} V_c \, \Delta y_R^{1/2} \, \Gamma_R^{-3/4} \, \Gamma \alpha_3(\Gamma) \, \alpha_4(\Delta y, \Gamma) \quad . \tag{59}$$

In equation (59) Γ_R and Δy_R (or N) are chosen to have maximum phase flux in Robinson's scheme.

Φ_m is maximum if $\alpha_4 = 1$, for $\left[\Gamma . \alpha_3(\Gamma)\right]_{max}$

$$\Gamma = .44 \quad . \tag{60}$$

The ratio of the phase flux is

$$\frac{\Phi_m}{\Phi_R} = (2\pi)^{-1/4} \, \Delta y_R^{1/2} \, \frac{\Gamma \alpha(\Gamma)}{\Gamma_R^{5/4} \alpha(\Gamma_R)} \quad . \tag{61}$$

From (51) and (60)

$$\frac{(\Phi_m)_{max}}{(\Phi_R)_{max}} \equiv 1.05 \, \Delta y_R^{1/2} \tag{62}$$

with $\Delta y \simeq 5$

$$\frac{(\Phi_m)_{max}}{(\Phi_R)_{max}} = 2.5 \quad . \tag{63}$$

The Robinson scheme gives an easier way to build the cavities but only half the beam intensity.

An intermediate case may be found when each of the N cavities is modulated only in the small range $\frac{f_M - f_i}{N}$. In this case, the phase flux is still Φ_m and it is not necessary to have the large weight of ferrite.

IV. DUTY CYCLE AT INJECTION

Another advantage of the multiple frequency scheme is the long time during which injection is available. We assume that the injector gives a dc beam. From Fig. 8 we can see, if $W_s(t)$ varies slowly

with time, that the percentage of beam captured on each revolution is

$$d = \frac{AB}{2\pi} \quad . \tag{64}$$

Over one period τ

$$d = \int_0^{\tau} \frac{AB(t)}{2\pi} dt \quad . \tag{65}$$

It is clear that

$$d = \frac{A}{2\pi \Delta W} \quad . \tag{66}$$

A is the bucket area and ΔW the momentum interval between buckets.

Using the expressions (46) and (41) for A and ΔW, it turns out

$$d = \frac{8}{\pi} \frac{\alpha_3(\Gamma)}{\Delta y} \alpha_4(\Delta y, \Gamma) \quad . \tag{67}$$

For $\Gamma = .25$ and $\Delta y = 5$, $\quad (\alpha_4 = 1)$

$$d = 30\% \quad . \tag{68}$$

As long as Δy is larger than twice the bucket height, there is no overlapping in the rf phase space, but with such a high duty cycle the buckets may overlap in the radial coordinate (due to betatron oscillations) and the beam intensity may be limited by space charge.

REFERENCES

1. K. W. Robinson, "Multiple Frequency Accelerators", MURA-475.

2. K. R. Symon and A. M. Sessler, "Methods of Radio Frequency Acceleration in Fixed Field Accelerators", MURA-106, or Proceedings of the CERN Symposium on High Energy Accelerators and Pion Physics, p. 44 (1956).

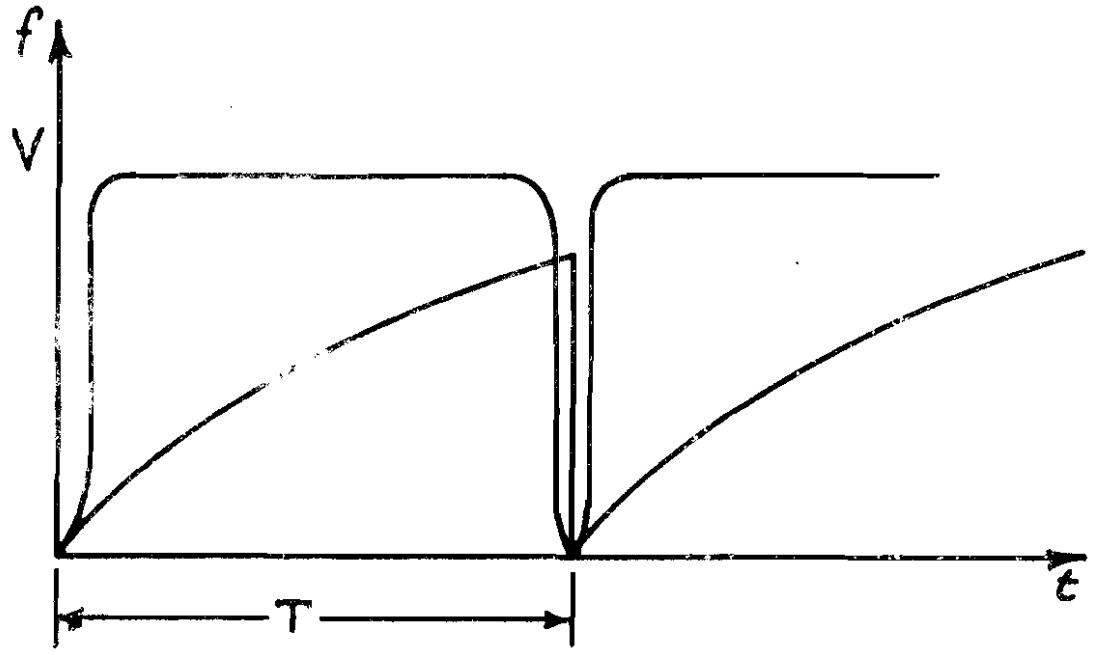

Fig. 1

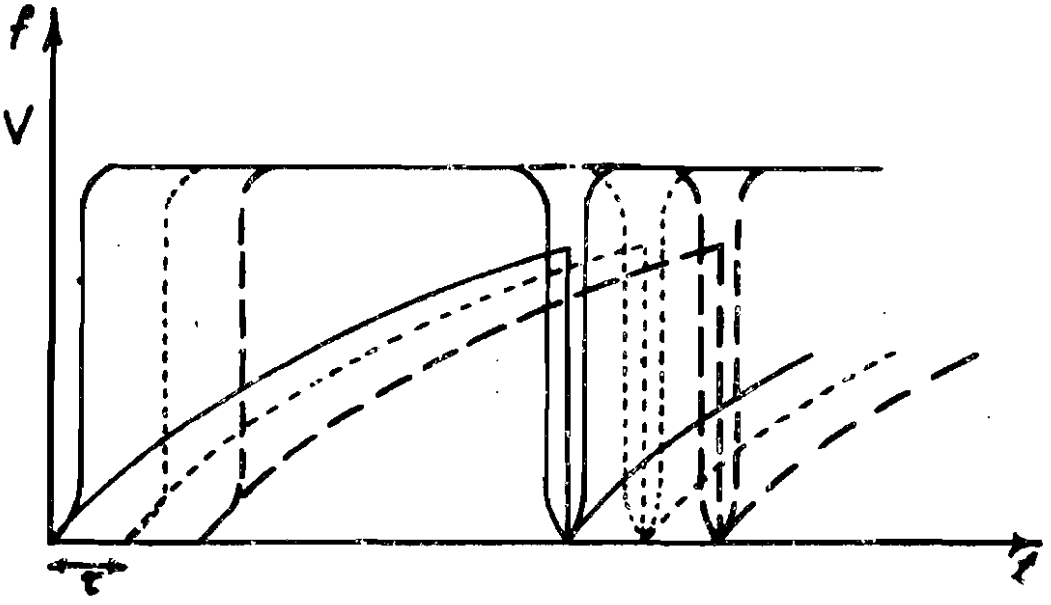

Fig. 2

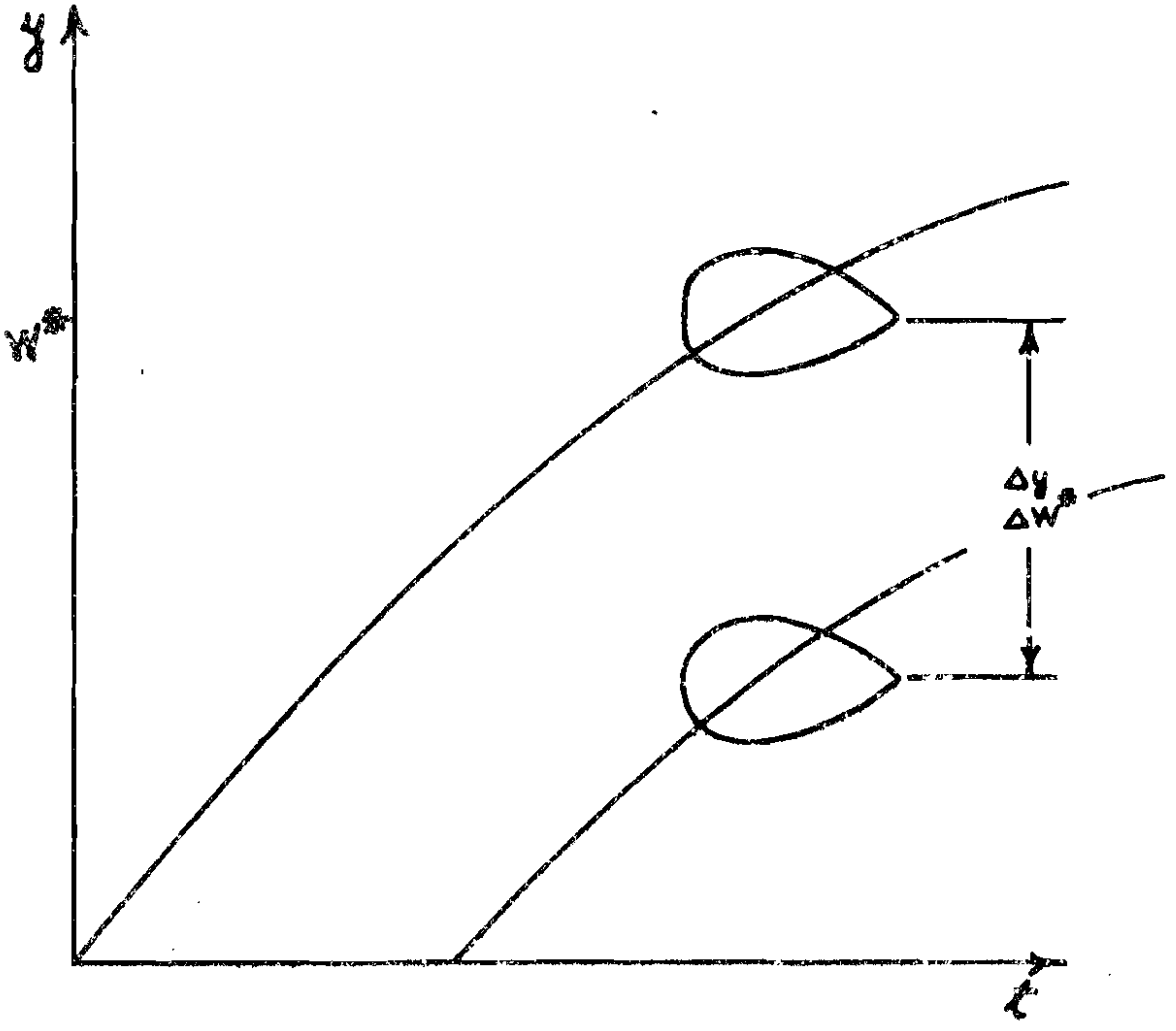

Fig. 3

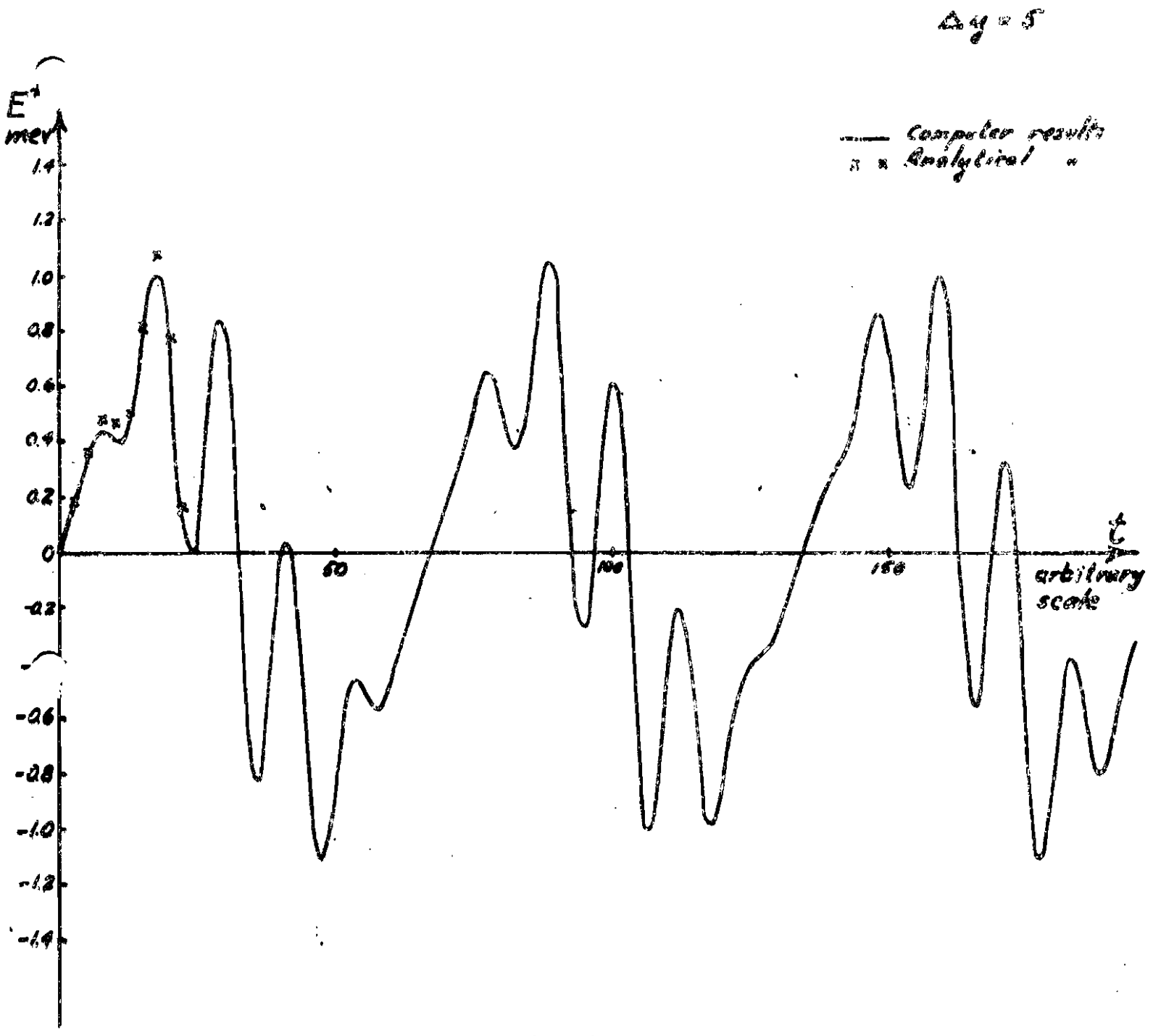
Δy = 5
E⁺
mev
1.4
1.2
1.0
0.8
0.6
0.4
0.2
0
-0.2
-0.6
-0.8
-1.0
-1.2
-1.4
50
100
150
t/τ
arbitrary scale
Computer results
Analytical "

Fig. 4

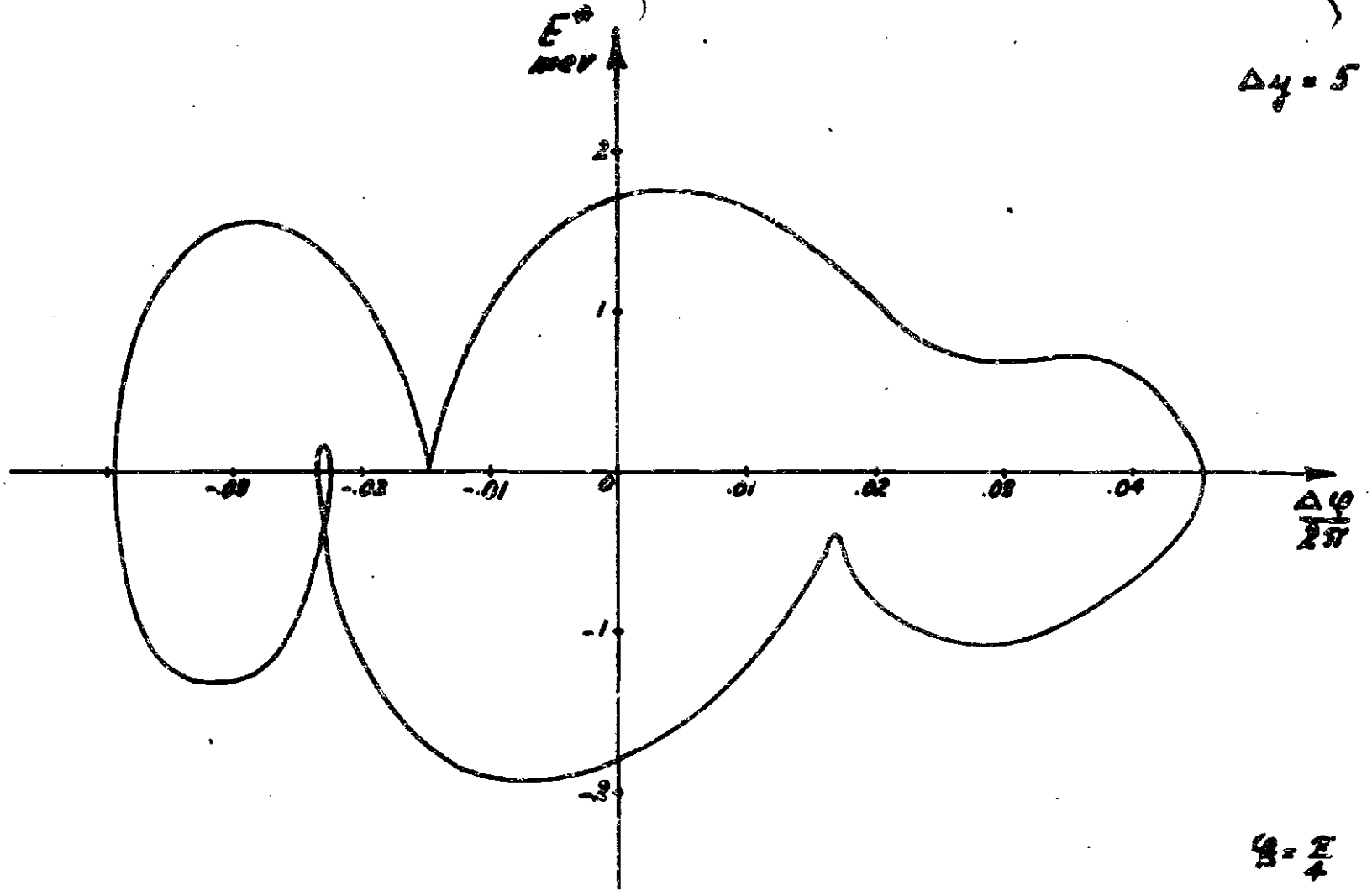
E^* mev
$\Delta y = 5$
2
1
-1
-2
-.03
-.02
-.01
0
.01
.02
.03
.04
$\frac{\Delta\varphi}{2\pi}$
$\varphi_s = \frac{\pi}{4}$

Fig. 5

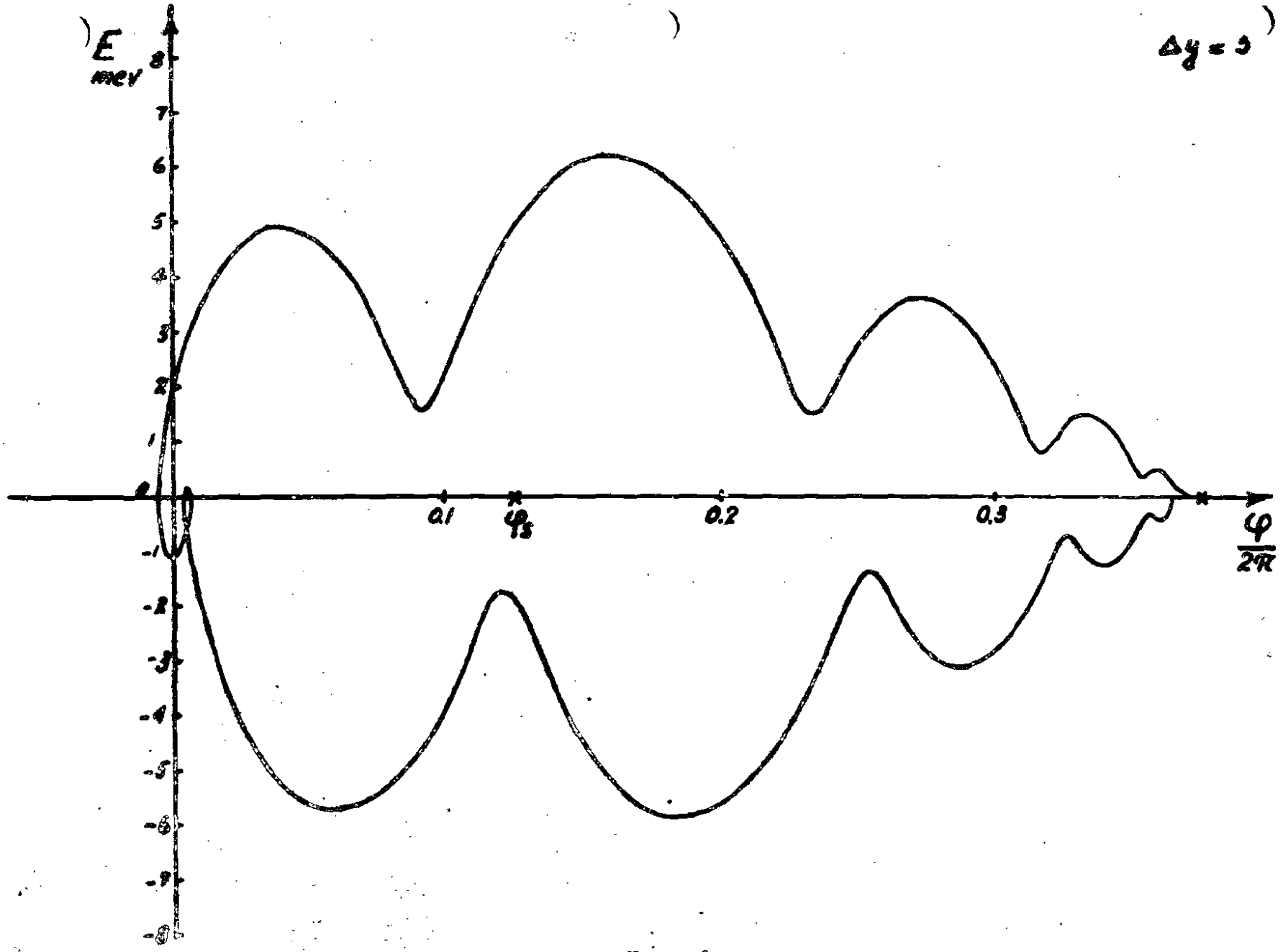
E
mev
8
7
6
5
4
3
2
1
0
-1
-2
-3
-4
-5
-6
-7
-8
0.1
φ_s
0.2
0.3
$\frac{\varphi}{2\pi}$
$\Delta y = 3$

Fig. 6

$\Delta y = 20$

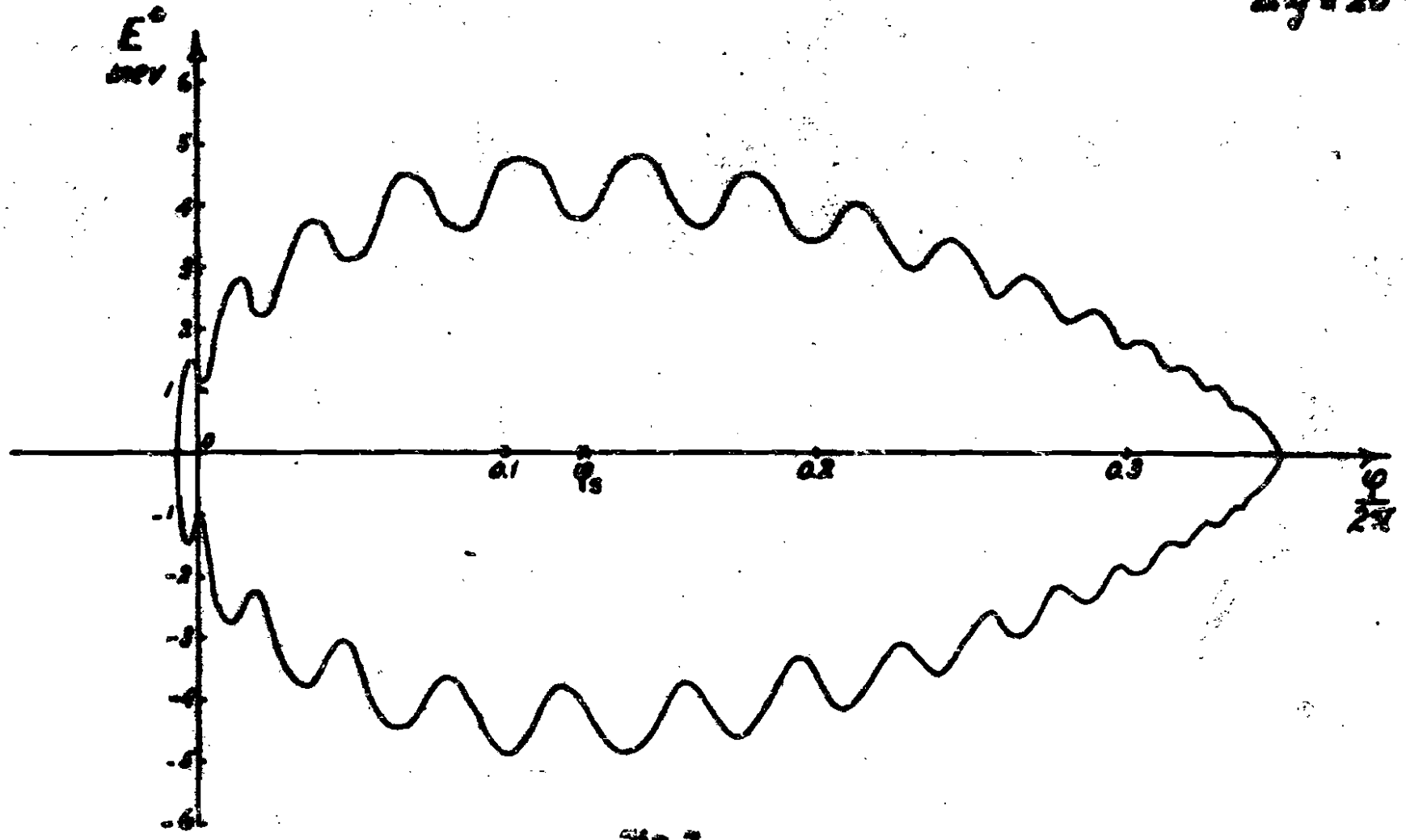

Fig. 7

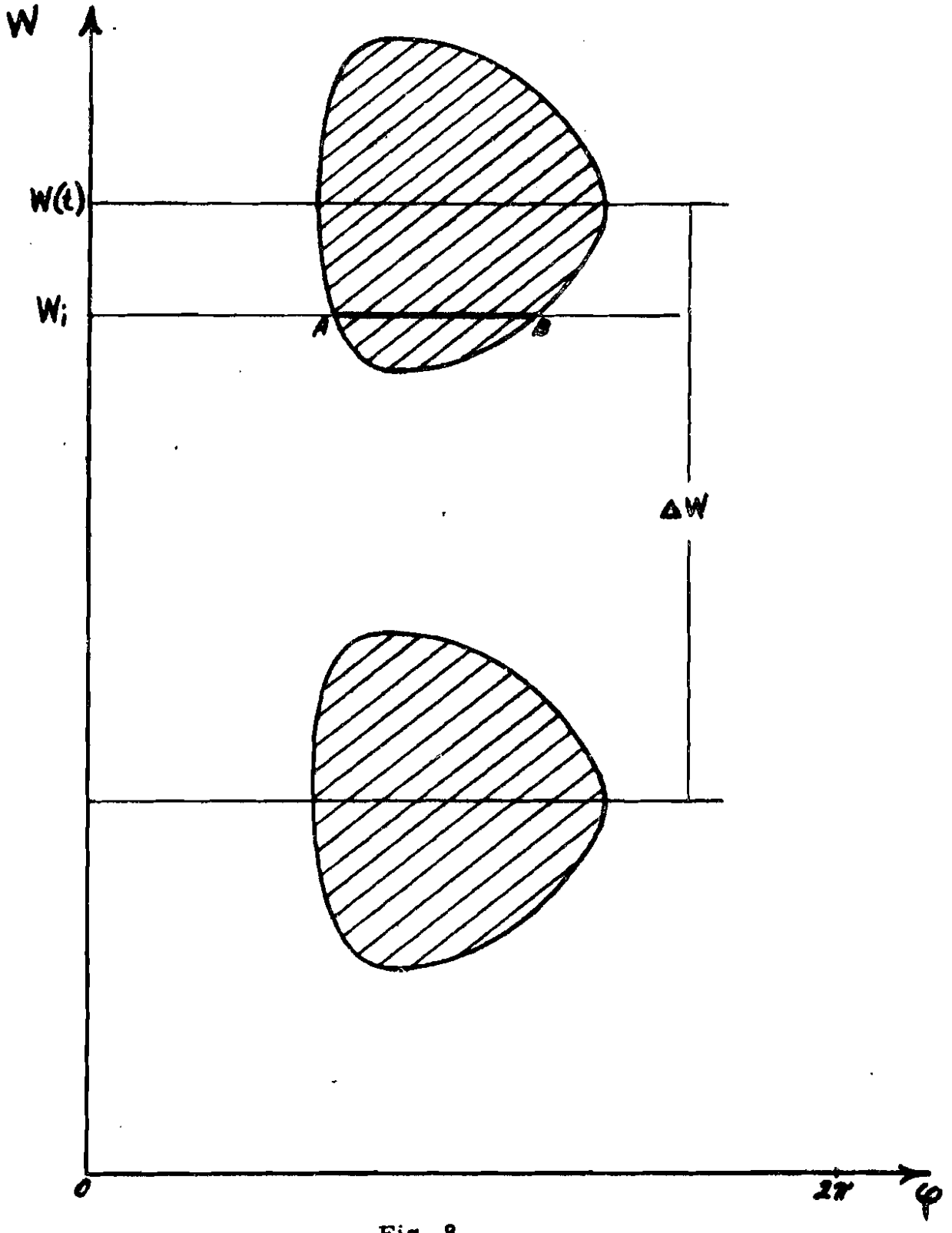

Fig. 8