554

Fermilab Library
0 1160 0038840 9

MIDWESTERN UNIVERSITIES RESEARCH ASSOCIATION

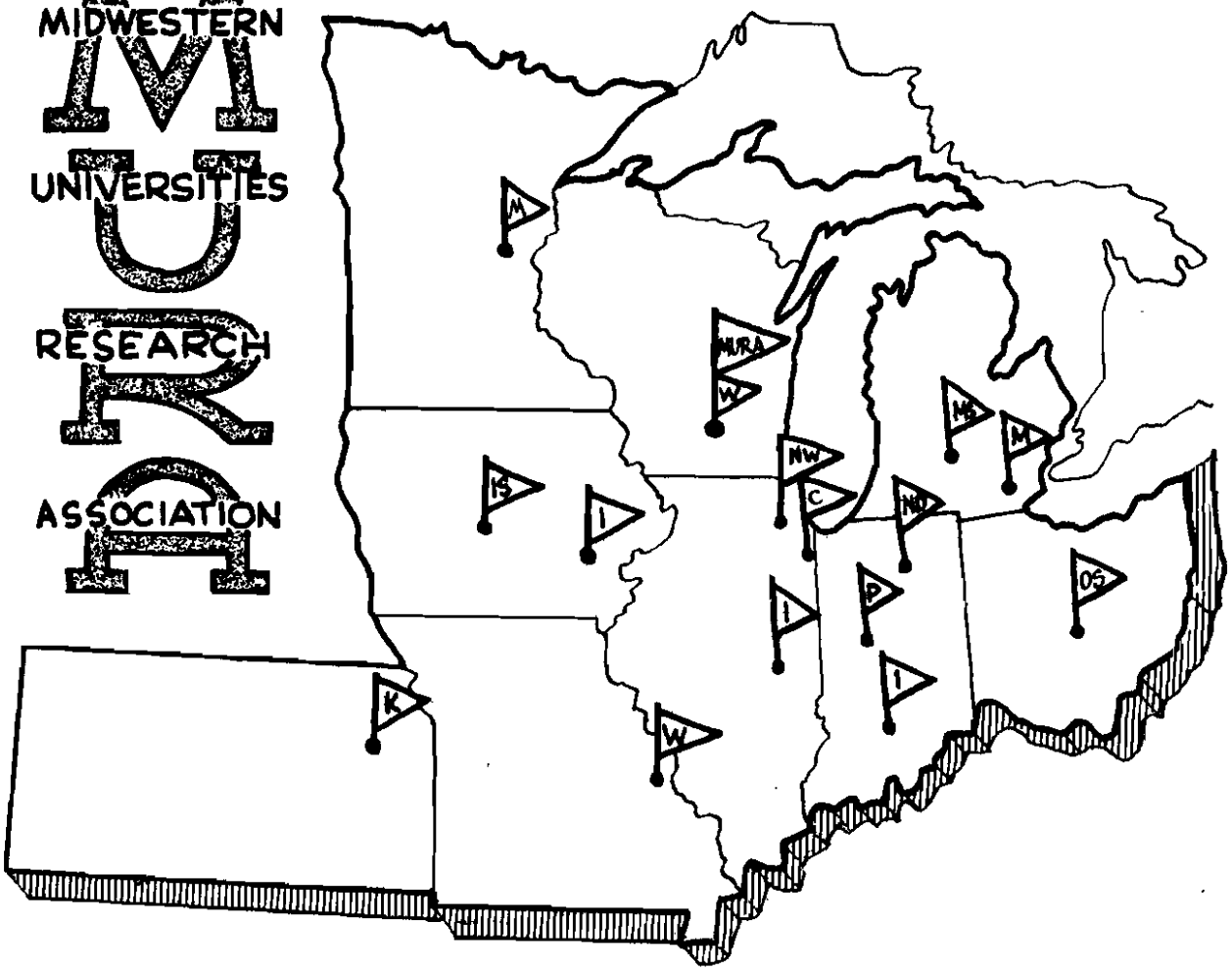

HIGH ENERGY NEUTRINO EXPERIMENTS WITH A HIGH INTENSITY FFAG ACCELERATOR

K. R. Symon

REPORT **NUMBER** 554

MURA-554
Internal

MIDWESTERN UNIVERSITIES RESEARCH ASSOCIATION*

2203 University Avenue, Madison, Wisconsin

HIGH ENERGY NEUTRINO EXPERIMENTS WITH A HIGH INTENSITY FFAG ACCELERATOR

K. R. Symon

January 15, 1960

ABSTRACT

It is shown that intense neutrino or anti-neutrino fluxes with a momentum resolution of $\pm$ 7% can be produced with a high intensity FFAG accelerator. The fluxes are high enough to produce several events per hour in a hydrogen bubble chamber of reasonable size. Muon fluxes of 4×10^7 cm^{-2} sec^{-1} at 1 to 2 Gev with the same momentum can also be produced.

*AEC Research and Development Report. Research supported by the U. S. Atomic Energy Commission, Contract No. AT (11-1)-384.

I. INTRODUCTION

It has been pointed out by Lee, Schwartz, and Yang[1] that a number of

[1]T. D. Lee, M. Schwartz, C. N. Yang. Some Considerations Concerning Possible Experiments with High Energy Neutrinos. To be published.

important questions regarding weak interactions could be settled by experiments with intense neutrino beams at energies over about 500 Mev. Many of these questions, for example, the question whether the neutrino emitted in π decay is the same as that emitted in nucleon beta decay, can probably only be decided by experiments with the neutrinos themselves. They point out that the cross section for inverse beta-decay processes may be expected to rise to about 10^{-38} cm^2 at such energies. Estimates of neutrino fluxes available from π decay at say the Princeton-Pennsylvania synchrotron, which is a medium intensity machine, show that detection of such events would be possible, though marginal, by using several tons of scintillating material. Yuan and Blewett[2] pointed out that a 10 Bev proton linear accel-

[2]J. P. Blewett. Application of the Linear Accelerator for Production of Intense Proton Beams at 10 Bev. Part II. Neutrino Beams. ADD Internal Report JPB-14. November 25, 1959.

erator proposed earlier by Blewett would be 5000 times as effective, and

would bring the counting rate in several tons of scintillator to a few interactions per second.

It is the purpose of this report to point out that a high intensity FFAG machine would be particularly suitable for high energy neutrino experiments. The reason is essentially that the flexible duty cycle of the FFAG accelerator together with the characteristics of the high intensity proton beam in such an accelerator, make possible, not only scintillation counter experiments, but also bubble chamber experiments. A variety of inverse beta-decay reactions can occur, and identification of particular reactions would be much easier in a bubble chamber picture. When one considers the volume of scintillator required and the fact that the reaction may occur anywhere in the scintillator, the difficulty of constructing an array which will distinguish between the various possible interactions appears formidable. Consider, for example, an attempt to detect a possible intermediate boson which carries the weak interaction. Its lifetime will be very short, so what is required is to detect the angular correlations in its decay products.

Linear accelerators and high repetition rate synchrotrons are not well suited to bubble chamber experiments because their duty cycles are not matched. The beam in an FFAG accelerator can be stacked for several seconds and then brought onto a target in a short burst timed to coincide with the expansion of the bubble chamber. We will see below that essentially all background except cosmic rays can be eliminated. Since the direction of the incoming neutrino beam is accurately known, and the momentum is known within about 7 % a simple momentum analysis on a bubble chamber picture will serve to distinguish neutrino-induced events from most cosmic ray events. The short duty factor

(less than 1/1000) is also an advantage here since less than 1 in 1000 cosmic ray events falls within the sensitive time of the bubble chamber. This advantage could also be gained in scintillation counter experiments by stacking the beam for a second or so and then bringing it onto a target and counting in coincidence.

For some experiments, a hydrogen bubble chamber might be desirable, in order to simplify the analysis of the events. Since this is the least favorable case in terms of event rate, we will analyze this case in the subsequent sections. It turns out that about six events per hour may be expected in a chamber 60 x 60 x 200 cm^3. For some purposes, a heavy liquid might be preferable. In a xenon chamber of the same size, the event rate would be about 40 times as great as in hydrogen.

In the next section, we describe a possible experimental arrangement. In the third section, we analyze this arrangement to determine the rate of events to be expected.

II. EXPERIMENTAL ARRANGEMENT

We show schematically in Fig. 1 a possible experimental arrangement for producing a neutrino beam. An internal target of 2 x 2 cm^2 cross section is placed in the internal proton beam. The target may be rather long, perhaps up to 40 cm, so far as the later beam optics is concerned, but need not be, since the beam may pass through (or around) an internal target many times and still eventually be absorbed in the target. Galonsky and Rosen find that over 90% of the protons may produce nuclear events in the target in such an arrangement. We assume 30 microamperes of 10 Bev protons

impinge on this target and produce π mesons. Pi mesons emerging from the target are bent and focussed in a magnetic lens of 60 cm total aperture, so as to focus π's of one sign and of energy about 1.5 Bev. on the bubble chamber 45 meters away. The aperture assumed for the lens is rather large, but is certainly not out of the question economically. Further design study is required to establish the maximum aperture which is feasible, but the optical requirements on the lens are not particularly stringent. During a 30 meter flight path, the π's decay according to

$$\pi^+ \rightarrow \mu^+ + \nu \,, \tag{1}$$

or

$$\pi^- \rightarrow \mu^- + \bar{\nu}. \tag{2}$$

The purpose of the bending and focussing lens is to eliminate from the beam all particles except those of one sign and appropriate momentum. This eliminates most of the undesired particles emitted from the target. At the end of the flight path is a bending magnet about 2 m in diameter to sweep all remaining charged particles away from the bubble chamber. The primary purpose is to eliminate muons whose decay would produce both ν and $\bar{\nu}$ of momentum differing from the neutrinos in reactions (1) and (2). The 15 meter shield of lead and concrete serves to remove all remaining contamination so that a clean beam of either ν or $\bar{\nu}$, depending upon the sign of π's selected, impinges on the bubble chamber. We will show in the next section that the flux of neutrinos is about 10^{10} per second through the bubble chamber, and that for 1.5 Bev ($\pm$ 7%) pions, their energy is 660 Mev within $\pm$ 7%. There will then be about six events per hour in a hydrogen bubble chamber

of the specified size, which is quite adequate for experimental purposes. One would look for reactions like

$$\bar{\nu} + p \rightarrow n + e^+,$$
$$\nu + n \rightarrow p + e^-,$$

or

$$\bar{\nu} + p \rightarrow n + \mu^+,$$
$$\nu + n \rightarrow p + \mu^-,$$
$$\bar{\nu} + p \rightarrow \Lambda_0 + e^+,$$

or, if there is an intermediate boson W,

$$\nu + p \rightarrow p + \mu^- + W^+,$$
$$W^+ \rightarrow \mu^+ + \nu.$$

It is worth noting in passing that with appropriate modifications in the optics, this arrangement can yield a flux of about 4×10^7 muons per square centimeter per second at about 1.5 Bev. Experiments with high energy muons may also be quite interesting.

III. ANALYSIS

With 10 Bev protons incident on a nucleon, the center-of-mass velocity is given by

$$\gamma_c = (1 - \beta_c^2)^{-1/2} = 2.45 .$$

The maximum in the π spectrum will occur at about $\gamma_\pi \doteq 2\gamma_c = 5$. We will take $\gamma_\pi = 10$, as a conservative π energy, although there will still be many π's at considerably greater energies. The greater the π energy the more neutrino interactions to be expected. At $\gamma_\pi = 10$, $E_\pi = 1.5$ Bev, and we calculate, for a neutrino emitted forward, $E_\nu = 660$ Mev.

According to Lee and Yang,[1] the cross section for inverse beta decay is expected to be about 2×10^{-38} cm^2 and increasing roughly linearly with energy.

A beam of 30 microamperes corresponds to 2×10^{14} protons per second. We assume that two-thirds of these make nuclear events in the target and that there are $4/3\pi$'s of each sign per event. We then have $10^{14}\pi$'s sec^{-1} in the forward cone. The half angle of the forward cone is about

$$\alpha_\pi = \frac{\beta'\gamma'}{\beta\gamma} = 0.3 ,$$

where primes refer to the center-of-mass frame. The lens subtends a cone of half angle

$$\alpha_{lens} = \frac{30 \text{ cm}}{300 \text{ cm}} = 0.1 .$$

Thus about $\left(\frac{0.1}{0.3}\right)^2$ or 0.1 of the π's pass through the lens. Now those π's of proper momentum from the edge of the target, 1 cm from the optical axis, are brought to a focus 15 cm from the center line of the bubble chamber. We will take the maximum momentum p_{max} to correspond to those π's which come to a focus at infinity. They travel along lines which pass through the bubble chamber in a cylinder 60 cm in diameter and whose axis is within 15 cm of the center line. The minimum momentum p_{min} we take to correspond to those π's focussed half way to the bubble chamber (23 m from the lens). We then have

$$\frac{\Delta p}{p} = \frac{\Delta f}{f} = \frac{f}{23 \text{ m}} = \frac{3 \text{ m}}{23 \text{ m}} = 0.13 ,$$

Thus we can tolerate a total momentum spread of about 13%. This also determines the bending angle in the first lens as 60 cm $\div$ (0.13 x 45 m) = 0.1 radians,

in order that the dispersion due to the momentum spread be comparable with the bubble chamber cross section. Since we are near the peak of the π spectrum, about 13% of the π's have momenta within this tolerance. Thus $0.1 \times 0.13 \times 10^{14} = 1.3 \times 10^{12}$ π's per second are aimed at the bubble chamber. The distance 30 m is about half a mean pathlength at this energy, so about 0.7×10^{12} π's decay in flight. The half angle of the forward cone of the neutrinos is

$$\alpha_\nu = \frac{E'_\nu}{E_\nu} = \frac{32.8 \text{ Mev}}{660 \text{ Mev}} = \frac{1}{20} .$$

The cone angle subtended by the bubble chamber at the midpoint of the flight path is

$$\alpha_{BC} = \frac{0.30 \text{ m}}{30 \text{ m}} = \frac{1}{100} .$$

Hence $(1/5)^2$ of the neutrinos pass through the chamber. The flux is therefore about $\frac{1}{2} \times \frac{1}{5} \times 0.7 \times 10^{12} = 10^{10}$ neutrinos per second through the chamber.

The energy of the neutrinos is:

$$E_\nu = 2 \gamma_\pi E'_\nu \left(1 - \frac{\alpha^2}{2}\right),$$

where E'_ν is the energy in the rest frame of the π, and α is the angle of emission with respect to the π momentum. Since $\alpha \leq \frac{1}{50}$ the spread in E_ν comes entirely from that in γ_π, and is therefore $\pm$ 7%.

With the given cross section, we find, in hydrogen,

$$\text{No events} = 10^{10} \text{ sec}^{-1} \times 2 \times 10^{-38} \frac{\text{cm}^2}{\nu} \times 4.2 \times 10^{22} \text{ cm}^{-3} \times 200 \text{ cm}$$

$$= 2 \times 10^{-3} \text{ events sec}^{-1}$$

$$= 0.1 \text{ event min}^{-1} .$$

There are also 0.4×10^{12} muons per second from π decay in a

forward cone of half angle 0.02 radians. At 30 meters from the lens, they occupy a cross section of about 10^4 cm^2, so the flux is about 4×10^7 sec^{-1} cm^{-2}.

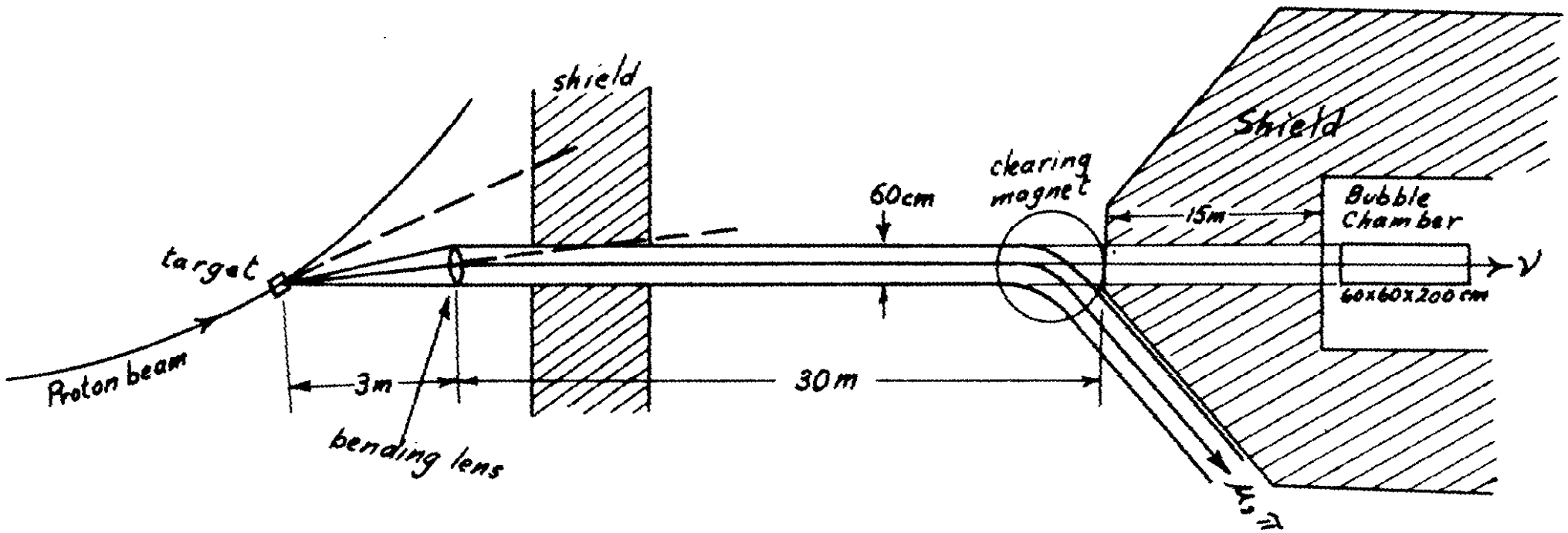
shield
Shield
clearing magnet
60cm
15m
Bubble Chamber
target
ν
60x60x200 cm
Proton beam
3m
30m
bending lens
ν_μ