530

Fermilab Library
0 1160 0038817 7

MIDWESTERN UNIVERSITIES RESEARCH ASSOCIATION

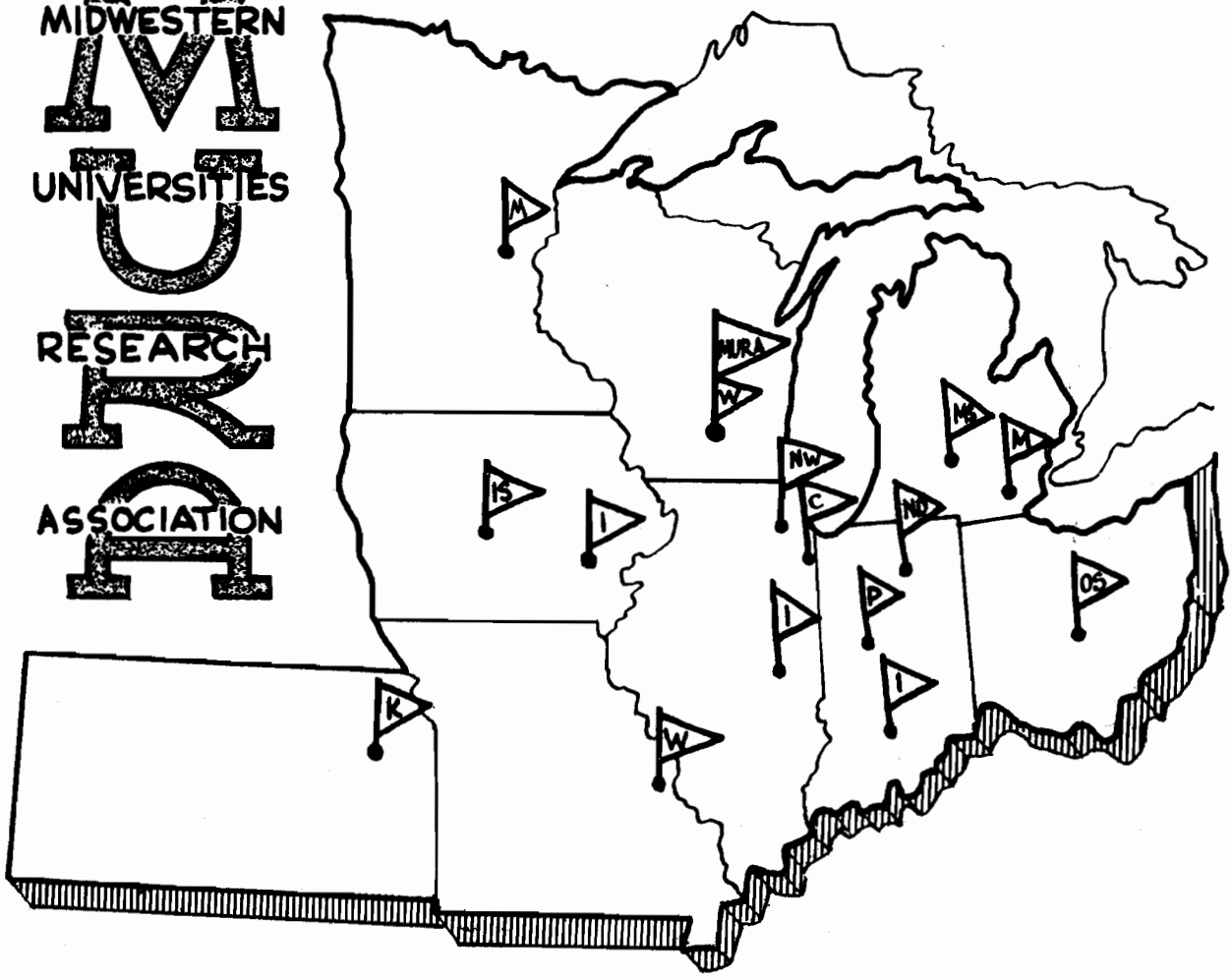

ENERGY AND ANGULAR DISTRIBUTION OF THE PARTICLES RESULTING FROM THE COLLISION OF A 15 BEV PROTON WITH A NUCLEON AT REST

Willy Smith

REPORT **NUMBER** 530

Report No. MURA-530
UC-28, Particle Accelerators
and High Voltage Machines
TID-4500 (15th Edition)

MIDWESTERN UNIVERSITIES RESEARCH ASSOCIATION*
2203 University Avenue, Madison, Wisconsin

ENERGY AND ANGULAR DISTRIBUTION OF THE PARTICLES RESULTING FROM THE COLLISION OF A 15 BEV PROTON WITH A NUCLEON AT REST

Willy Smith**

September 8 1959

ABSTRACT

On the basis of the scarce information available from cosmic ray experiments, the energies and angular distribution of the particles resulting from the collision of a high-energy proton with a nucleon at rest are determined.

Estimated values are presented in Table VI. It is remarked that the multiplicities as stated apply only to nucleon collisions with light nuclei.

Of some interest is the fact that with the only exception of the low energy gammas, all the particles are emitted in the forward direction in the laboratory frame. For the highly energetic particles, this ejection takes place within a very narrow cone.

Under more specific conditions, i.e., when parameters as the pressure in the tank and the circulating current are fixed, further use can be made of these preliminary values for the following purposes:

(a). To estimate the number of particles to be expected per unit volume in the neighborhood of the beam, due to its interaction with the residual gas.

(b). To calculate the level of the radiation produced when the whole beam strikes a thin target.

(c). To study the development of nucleon-nucleon cascades and photon-electron showers in the iron, thus estimating the type and energy of the radiation leaving the machine, of fundamental importance from the point of view of the shielding

* AEC Research and Development Report. Research supported by the Atomic Energy Commission, Contract No. AEC AT(11-1)-384

** Summer Participant, University of Michigan, Ann Arbor, Michigan.

I. Number of Particles in the Beam

Considering a plane perpendicular to the direction of the beam, we express the number of particles crossing that plane per unit time as a function of the total current I. The proton charge is:

$$e = 4.8 \times 10^{-10} \text{ esu} = 1.6 \times 10^{-19} \text{ coulombs}$$

i.e., a current of 1 amp corresponds to:

$$\frac{10^{19}}{1.6} \quad \frac{\text{particles}}{\text{sec}}$$

and a current of I amp to:

$$N = .625 \times 10^{19} \text{ I part./sec} \tag{1}$$

II. Residual gas

The residual gas is assumed to be diatomic, with a mass number A and under a pressure of p mm. Hg. The number of molecules per cm^3 is:

$$n_m = \frac{N_o}{22412} \frac{p}{760} = \frac{6.025 \times 10^{23} p}{22412 \times 760} \frac{\text{mol}}{cm^3} \tag{2}$$

and the number of nucleons per cm^3

$$n = \frac{6.025 \times 10^{23} \times 2 \text{ Ap}}{22412 \times 760} = 7.07 \times 10^{16} \text{ Ap} \tag{3}$$

In particular, if the residual gas is nitrogen, A = 14 and:

$$n = 7.07 \times 10^{16} \times 14 \text{ p} = 9.9 \times 10^{17} \text{ p} \cong 10^{18} \text{ p} \quad \frac{\text{nucleons}}{cm^3} \tag{4}$$

III. Expected number of collisions

We study now the interaction of a 15 Bev proton with a nucleus of the residual gas. At this high energy the nucleon in the gas can be considered as independent and at rest, and the first problem is to choose a proper value for

the proton-nucleon cross section. Unfortunately, very few experimental results are available in the Bev energy range. Using Hess's[9] excellent summary of nucleon-nucleon cross-section data, we were able to obtain, by extrapolating his curves, the following value for the total proton-proton cross section:

$$\sigma_{pp} = 25 \text{ mb} \tag{5}$$

We shall use this value for both the p-p and p-n total cross-sections, since it is in good agreement with the generally assumed cross-section of the order of the geometrical value $(h/m_{\pi}c)^2 \cong 20.4$mb.

Now the number of interactions is:

$$R = N n \sigma$$

Using expressions (1), (4) and (5),

$$R = 1.56 \times 10^{11} \, I \, p \tag{6}$$

where R = interactions per sec per cm. of path
I = total beam current, amp
p = vacuum tank pressure, mm. Hg.

If the residual gas is hydrogen (A = 1), the interaction rate is reduced by a factor of $\sim$10, and formula (6) becomes

$$R = 1.11 \times 10^{10} \, I \, p \tag{7}$$

IV. Nucleon-nucleon collisions - Multiplicity

The problem is to determine the particles resulting from a nucleon-nucleon collision, as well as their energy and angular distributions. Again, in the Bev energy range this is not simple since most of the information available in the literature refers to cosmic rays. Although primary cosmic radiation is composed mainly of protons (about 91%)[8], they are distributed over a wide range

of energies, and the application of cosmic ray results to our case will imply simplifications and assumptions not always well justified.

For incident protons with energy, E_o, of the order of several Bev, each nucleon-nucleon collision will be inelastic. To designate the secondary particles, we use the following notation:

N_h = number of heavily ionizing particles, i.e., those protons that produce grey and black tracks in photographic emulsions. The grey protons, N_g, may produce stars as the primaries do while the black ones, N_b, are stopped by ionization. The corresponding energies are:

grey tracks	30 Mev $< E_k <$ 500 Mev
black tracks	$E_k <$ 30 Mev

n_s = shower particles, i.e., particles that produce thin tracks in photographic emulsions. They will be either charged pions, n_π, with kinetic energy about 80 Mev, or protons, n_p, with kinetic energy above 500 Mev. Note that at these energies it is not easy to distinguish protons from K-mesons, and n_p may thus include some K-mesons.

Further, we assume that protons and neutrons are equally distributed in number and energy. The number of neutral pions, n_{π^o}, is taken as one-half of the number of charged pions, and the number of protons in the shower particles is assumed to be one-fourth of n_s in the cases when no other experimental information is available.

Thus, we have:

$$n_s = n_\pi + n_p \tag{8}$$

$$n_p = n_s/4 \tag{9}$$

$$N_h = N_b + N_g \tag{10}$$

$$n_{\pi^o} = \frac{n_\pi}{2} \tag{11}$$

In order to determine the multiplicity of the particles resulting from the nucleon-nucleon collision, we consider data from three different sources of information. According to Hansen and Fretter[2], the variation of the number of secondary particles with the energy E_o of the incident proton is as given in Fig. 1. These results correspond to experiments performed in carbon and are in good agreement with the predictions of the Landau-Belenky theory.

From Messel[6] we take a set of theoretical results obtained on the basis of the following assumptions:

(a) Every high energy nucleon-nucleon collision leads to the creation of one, and only one meson.

(b) The primary nucleon makes on the average more than one collision in traversing the nucleus. The effect of the recoil nucleus is considered.

(c) The mesons produced are simply emitted without any interaction with the nucleons of the nucleus in which they are created.

Messel's results are for collisions in light elements, carbon, nitrogen and oxygen, and for collisions in heavy elements such as silver and bromine.

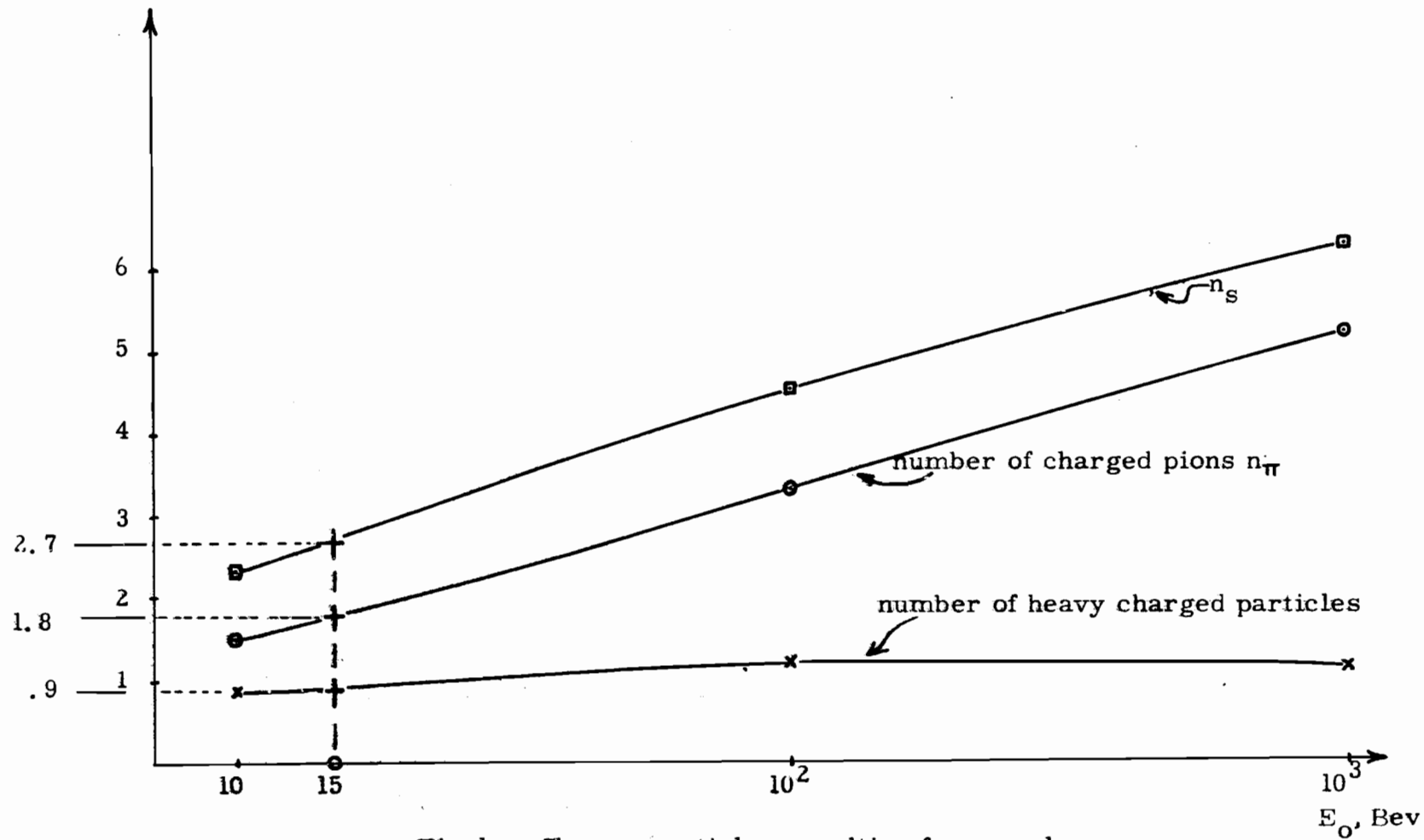

Fig. 1. - Shower particles resulting from nucleon-nucleon collision in carbon. (Ref. 2). -

The third source of information is Camerini et al.[5] His results are obtained from the study of the stars produced in photographic plates by cosmic rays and will refer mainly to collisions in heavy nuclei (as silver and bromine). We use the curves on page 11 of Ref. 5, which give the values N_h, N_b and n_s as functions of the kinetic energy of the primary, extrapolating to the value 14 Bev that corresponds to $E_o = 15$ Bev. From the value n_s we obtain n_p as per Eq. (9)

The data is summarized in Table I.

	References			
	Hansen & Fretter	Messel		Camerini
Particles	A = 12	$12 < A < 16$	$80 < A < 108$	$80 < A < 108$
n_p	0.9	1.06	.68	1.16
n_π	1.85	2.72	4.58	3.50
n_s	2.75	3.78	5.26	4.66
n_{π^0}	.92	1.36	2.29	1.75
N_g				6
N_b				14
N_h				20

TABLE I

Before selecting the multiplicities that will better suit our case, several considerations must be made. First of all, the apparently dispersed values of Table I become more consistent when plotted versus the mass number A. Although, in rigor, the data is not enough to justify the curves, the evident trend of the variation of n_π and n_p has been indicated with dotted lines. As pointed out by Messel, in order to make an adequate comparison of such heterogenous

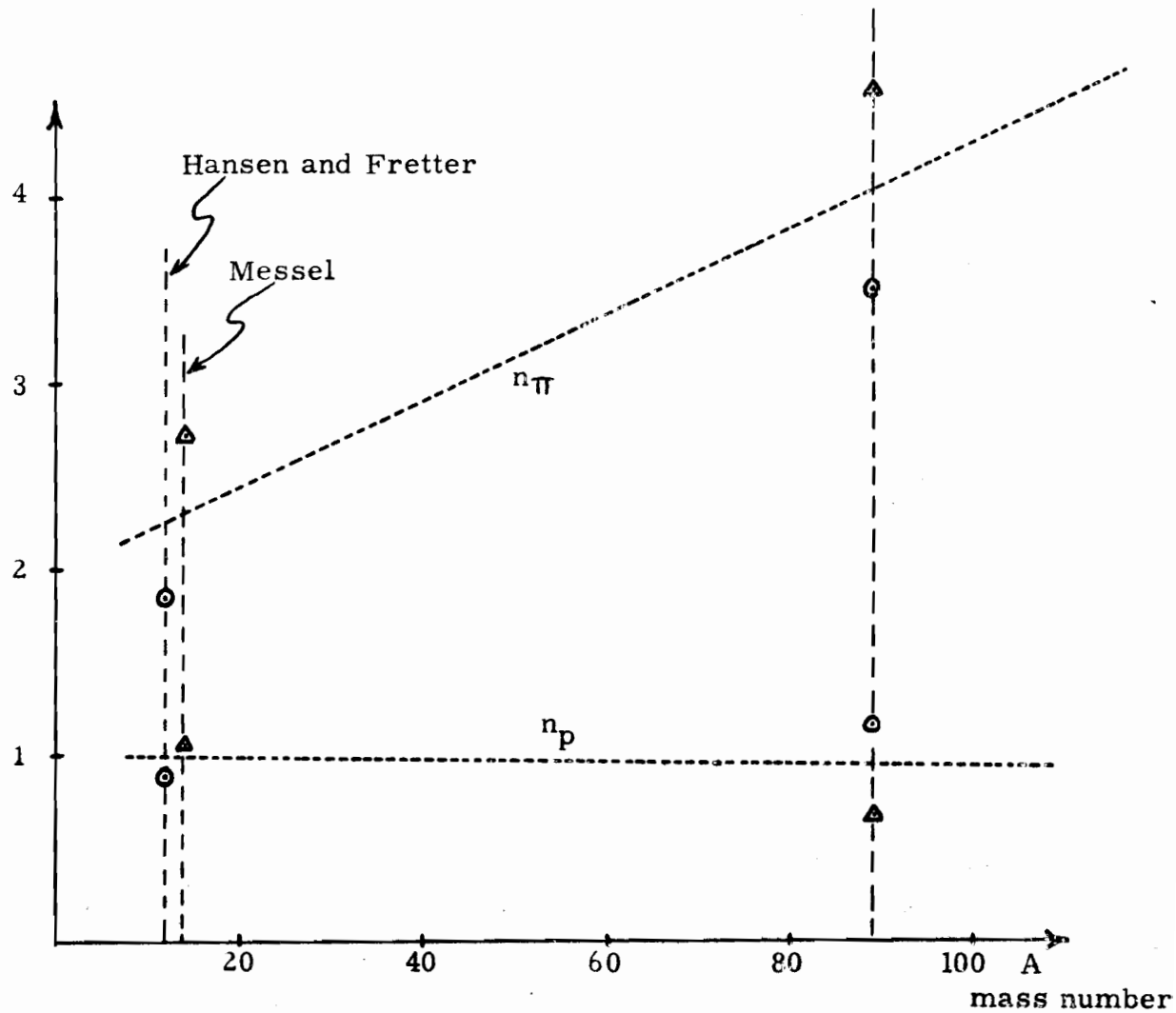

Fig. 2. - Multiplicity of particles for E_o = 15 Bev. -

⊙ experimental points ▲ theoretical points

results it would be necessary to apply weight factors to the theoretical values, in correspondence with the proportion of light and heavy elements in the photographic emulsions where the experimental results were obtained. If that is done, the agreement between experimental and theoretical values is good.

The values of Hansen and Fretter refer essentially to nucleon-nucleon collision for light elements. They are small when compared with the values obtained by Camerini and seem to confirm the nucleon-nucleus character of most collisions in emulsions.

For our purposes, we are interested in interactions of nucleons with light nuclei which are the ones that will be found in the vacuum tank. Hence, the choice of multiplicites is restricted to either Hansen and Fretter or Messel's values. Messel's theory was developed for cascades of cosmic rays rather than for nucleon-nucleon collisions as such. On the basis of that consideration, the best choice is indeed given by Hansen and Fretter results; for n_p, in good agreement with Messel's value, we feel justified to take:

$$n_p = 1$$

For n_π we round the value of 1.85 to $n_\pi = 1.90$ since the gas in the tank will be probably nitrogen of somewhat higher mass number. From the above numbers, finally:

$$n_s = 2.90$$

$$n_{\pi^0} = 0.95$$

V. Energy distribution of the pions

Let us consider a nucleon-nucleon collision in which one pion is produced.

We want to determine the maximum energy of this pion.

In the CMS the kinetic energy of the meson will be maximum when, after the collision, the two nucleons have equal and parallel momenta. Then, the momentum of the meson is equal in magnitude and opposite in direction to the combined momentum of the two nucleons.

The total Energy E' in the CM when a particle of rest energy m_1c^2 and kinetic energy E_k collides with a target particle of rest energy m_2c^2 is given by the expression[3]

$$E' = (m_1c^2 + m_2c^2)\sqrt{1 + \frac{2m_2c^2\ E_k}{(m_1c^2+m_2c^2)^2}} \tag{12}$$

Here, with $m_1c^2 = m_2c^2 = 938.87$ Mev and $E_k = 15 - 0.938 = 14.06$ Bev we get

$$E' = 5.47 \text{ Bev} \qquad \text{CM}$$

Hence, discounting the rest energy of the 3 particles, the available kinetic energy is

$$K = 3.45 \text{ Bev.}$$

Now, for each particle, in any frame of reference

$$E^2 - c^2p^2 = m^2c^4 \tag{13}$$

where E represents the total energy

$$E = E_k + mc^2 \tag{14}$$

From (13) and (14)

$$E_k^2 + 2E_kmc^2 = c^2p^2 \tag{15}$$

Eq. (15) will hold for the pion and for the nucleons. If we denote by E_k the

kinetic energy of the nucleon and for E_π the kinetic energy of the pion, we have

nucleon $$E_k^2 + 2E_k Mc^2 = c^2p^2 \tag{16}$$

pion $$E_\pi^2 + 2E_\pi m_\pi c^2 = c^2p_\pi^2 \tag{17}$$

Consider the case in which the π has the maximum possible energy. Then,

$$p_n = p_p = \frac{p_\pi}{2}$$

Multiplying (16) by 4 we obtain

$$4E_k^2 + 8E_k Mc^2 = E_\pi^2 + 2E_\pi m_\pi c^2 \tag{18}$$

But also

$$E_\pi + 2E_k = K$$

By substitution in (18) and solving for E_π;

$$E_\pi = \frac{K^2 + 4K\,Mc^2}{2K + 4Mc^2 + 2m_\pi c^2} = 2.28 \text{ Bev} \tag{19}$$

Then, the maximum total energy of the pion in the CMS is

$$E' = 2.28 + .14 = 2.42 \text{ Bev.}$$

Of course, if more than one meson is created, this maximum energy will be less. The energy spectrum depends upon the differential cross-section, of which little is known.

In order to determine the energy distribution of the pions, we again use data obtained from cosmic rays, and assume that the energy distribution is more or less independent of the primary energy. We use the curve given by Camerini et al. (Ref. 10, p. 418). Let N(E)dE be the number of mesons with energy in dE about E, expressed in arbitrary units, in the laboratory system. As stated by

those authors, between .25 Bev and 2.9 Bev, the spectrum can be represented within experimental errors by a power law of the form $E^{-1.5}$. That is

$$N(E) = \frac{A}{E^{3/2}} + B \tag{20}$$

where if the constants are taken as

$$A = 2.4 \times 10^5$$

$$B = .57$$

the analytical expression (20) will fit the experimental curve for $E = .25$ and $E = 2.9$ Bev.

We divide now the energy range in three intervals of interest

(a) $140 \leq E \leq 500$ Mev

(b) $500 \leq E \leq 1$ Bev

(c) $1 \text{ Bev} \leq E \leq 2.9$ Bev

and evaluate the proportions n_a, n_b and n_c of the mesons produced with energies (in the LS) in each interval. We find that

$n_a = .561$ per meson produced

$n_b = .235$ per meson produced

$n_c = .204$ per meson produced

VI. Angular distribution of the pions

For a particle of rest energy m_1c^2 and kinetic energy E_k, colliding with a target particle of rest energy m_2c^2, the relativistic β_c and γ_c for the center-of-mass are expressed[3]

$$\beta_c = \frac{\sqrt{1 + 2m_1c^2/E_k}}{1 + (m_1c^2 + m_2c^2)/E_k}$$

and

$$\gamma_c = \frac{1}{\sqrt{1 - \beta_c^2}} = \frac{1 + E_k/(m_1c^2 + m_2c^2)}{\sqrt{1 + 2m_2c^2E_k/(m_1c^2 + m_2c^2)^2}}$$

For an incident proton of 15 Bev total energy, then, with $m_1c^2 = m_2c^2$, the above formulas yield:

$$\beta_c = .939 \qquad \text{and} \qquad \gamma_c = 2.913.$$

According to Hansen and Fretter[2], the average energy for the pions is 420 Mev in the CMS while the average value of the transverse momentum is of the order of .3 Bev/c. Using the formula

$$E^2 = p^2c^2 + m^2c^4 \tag{21}$$

valid in any frame of reference, we calculate the momentum that corresponds to the average energy

$$|p'| = .396 \text{ Bev/c.}$$

The longitudinal component is then

$$p_x = .258 \text{ Bev/c}$$

and the angle θ' in the CMS with respect to the line of flight of the incident particle is given by

$$\tan\theta' = \frac{p_T}{p_x} = \frac{.307}{.258} = 1.19 \text{ or } \theta' = 49°58'$$

Now, in the CMS the distribution of secondary particles of any kind must satisfy the symmetry principle (Ref. 4, p. 449). Unlike the conservation principles, the symmetry principle does not apply to an individual collision, but to the average of a large number of collisions, and states that the secondary particles must have not only a cylindrical symmetry with respect to the direction of the

incident particle, but also a specular symmetry with respect to a plane perpendicular to that line. Hence, for each pion emitted forward with an angle $\theta' = 49^{\circ}58'$, there will be a pion emitted backwards with an angle $\theta' = 130^{\circ}02'$.

Let us calculate the energies and angles that correspond to these pions in the laboratory system. We use the expressions[3]

$$E = (E' + \underline{p}' \cdot \underline{\beta}_c c)\gamma_c \tag{22}$$

and

$$\tan\theta = \frac{\sin\theta'}{\gamma_c(\cos\theta' + \beta_c/\beta'_i)} \tag{23}$$

where $\beta'_i c$ represents the velocity of the pion in the CMS.

Thus, for the forward pion we obtain:

$$E = (.42 + .396 \times .939 \times \cos 49^{\circ}58')2.91 = 2.05 \text{ Bev}$$

and

$$\beta'_i = \frac{p'}{E'} = \frac{.396}{.42} = .943$$

so

$$\tan\theta = \frac{0.643}{2.91(0.766 + \frac{.939}{.943})} = .1225$$

For the backward pion, similarly

$$E = (.42 - .396 \times .939 \times .766) \times 2.91 = .392 \text{ Bev}$$

and

$$\tan\theta = \frac{.643}{2.91(-.766 + \frac{.939}{.943})} = .967, \text{ therefore } \theta = 44^{\circ}02'$$

To proceed further, we make use of the energy distribution of the π-mesons as presented by Hansen and Fretter[2] and of the experimental fact that the transverse momentum is constant, and independent of primary and secondary energies. (This result is interesting and confirms previous work with photographic emulsions). On this basis, we calculate energies and angles in the LS, summarizing the results in Table II.

E', pion energy in CMS, Bev	Forward in CMS		Backward in CMS	
	E' in LS, Bev	θ in LS	E' in LS, Bev	θ in LS
.42*	2.05	6°59'	.392	44°02'
.60	3.10	5°43'	.390	57°25'
.80	4.31	4°05'	.346	76°33'
.90	4.90	3°36'	.344	83°45'
1.00	5.48	3°13'	.340	91°21'
1.10	6.07	2°54'	.338	98°31'
1.20	6.64	2°38'	.349	101°18'
1.50	8.36	2°06'	.375	117°23'

TABLE II

* Average energy.

Inspection of this table and of the energy distribution in Fig. 3 leads to the following conclusions.

In the CMS, the majority of the pions are produced with the average energy of 0.42 Bev. Those that are ejected forward will appear in the LS within a very narrow cone, of half-angle, 7°, and with an average energy of 2.05 Bev. The ones ejected backward, on the other hand, will have low average energy in the LS, about .39 Bev and will appear within a cone of half-angle 90°. Notice that the last values in Table III can be neglected since only a few π-mesons are produced with those energies.

Therefore, in the LS, the π-mesons are distributed in two definite groups, one with energies about 500 Mev, the other with energies below that value, their number being approximately equal. This confirms the distribution in energy for the mesons obtained in #5 by a different way.

Hence, we conclude, in the laboratory frame

(a) Low energy case. The number of mesons with energies less than 500 Mev is $n_\pi n_a = 1.90 \times .561 = 1.065$. They are produced within a cone of half-angle 90°, i.e., within a solid angle of

$$\Omega_1 = 2\pi(1 - \cos 90^\circ) = 6.283 \text{ sterad.}$$

Thus, if we assume an isotropic distribution in the cone, we have

$$n_1 = \frac{1.065}{6.283} = .17 \text{ mesons/sterad.}$$

per interaction, with an average energy

$$\langle E_1 \rangle = .39 \text{ Bev}$$

(b) High energy case. Similarly, the number of mesons with energies above 500 Mev is

$$n_\pi(1 - n_a) = 1.90 \times .439 = .835$$

produced within the solid angle

$$\Omega_2 = 2\pi(1 - \cos 8^\circ) = .0611$$

that is

$$n_2 = \frac{.835}{.0611} = 13.67 \text{ mesons/sterad}$$

with an average energy

$$\langle E_2 \rangle = 2.05 \text{ Bev}$$

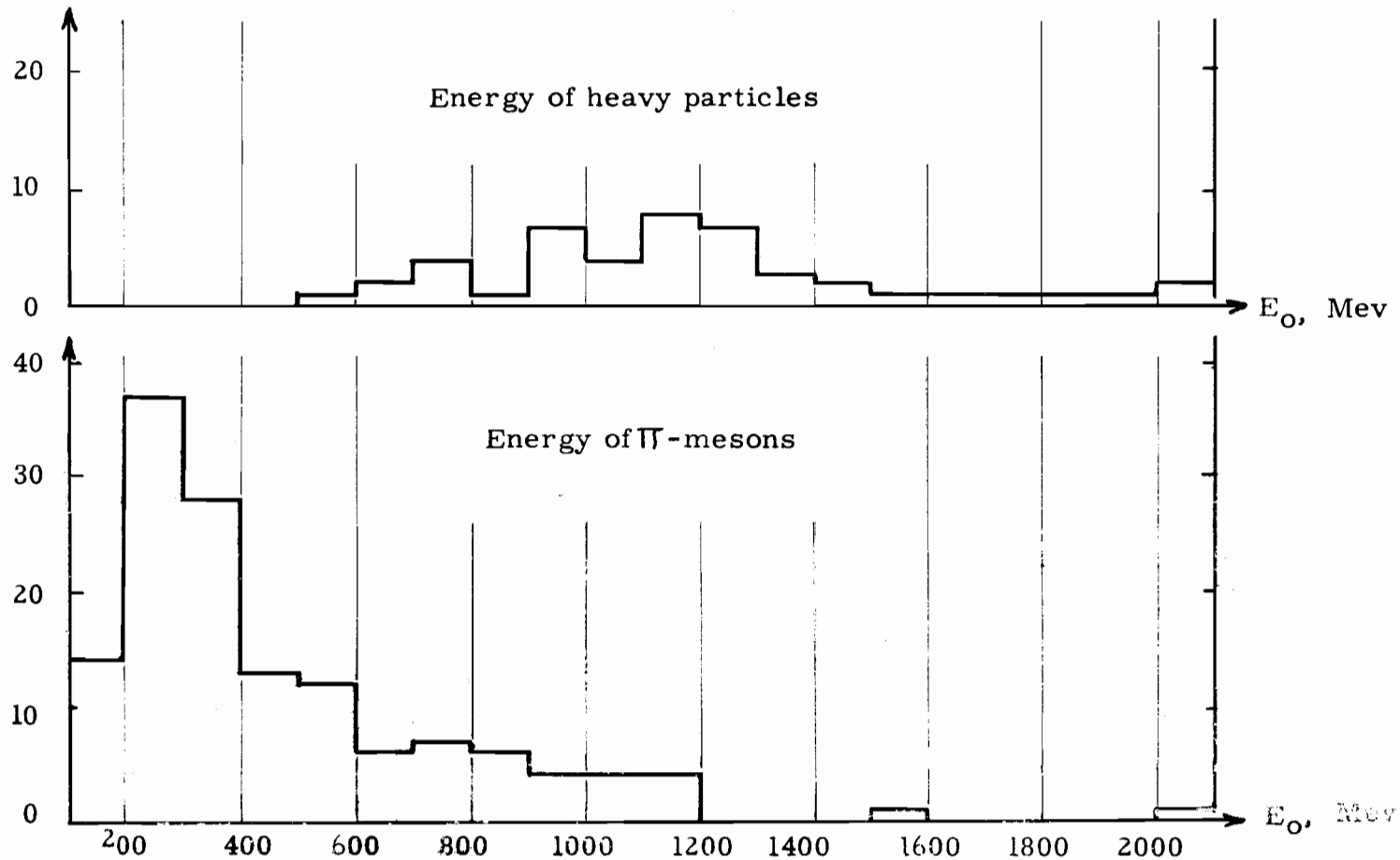

Fig. 3. - Total energy of particles in the CMS. (Ref. 2)

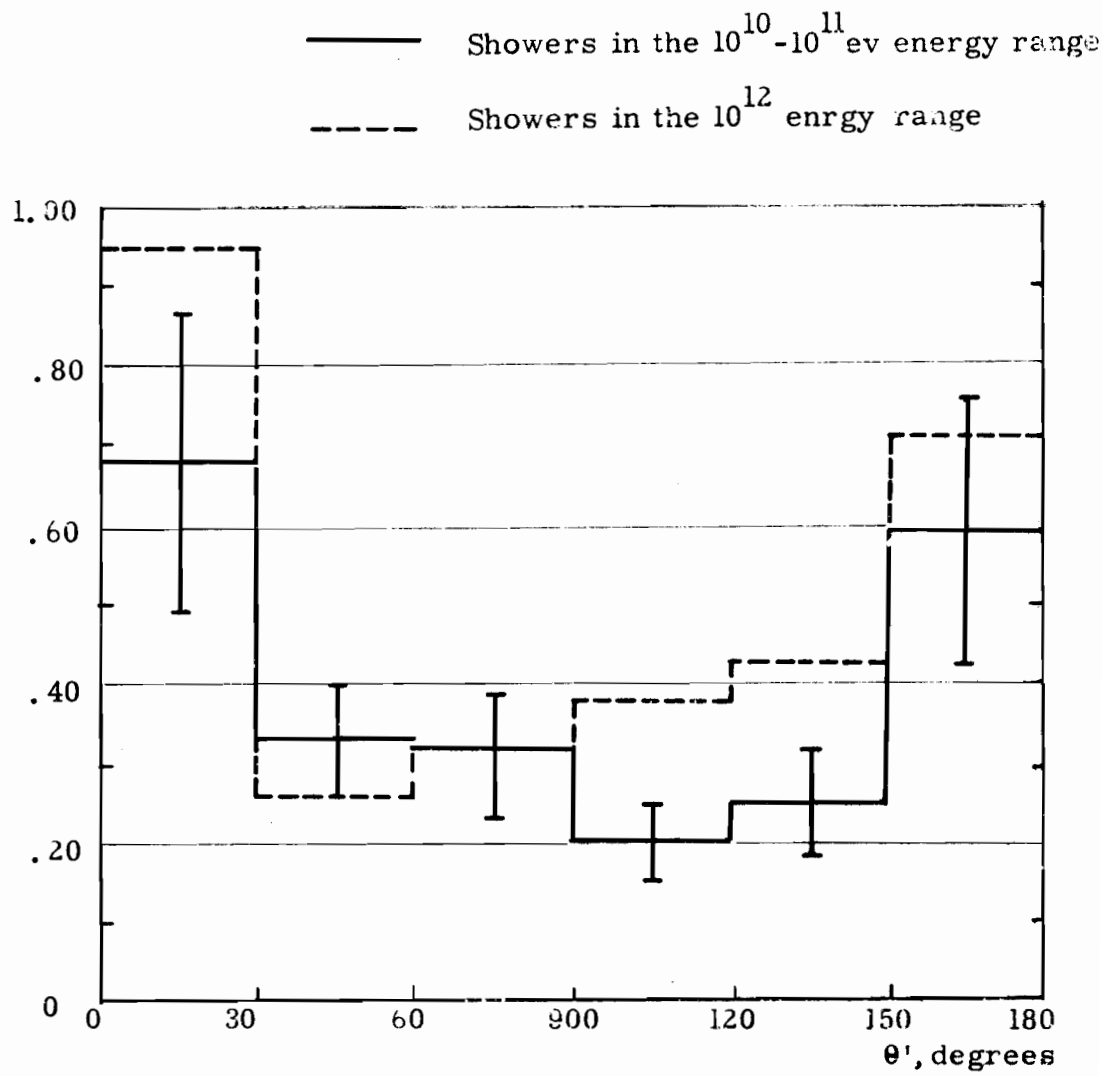

Fig. 4.- Angular distribution of the π -mesons in the CMS. (Ref. 2).-

VII. Energy and angular distribution of heavy particles

In order to obtain an idea of the energy and angular distribution of the heavy particles, we use the experimental results of Hansen and Fretter[2] for primary energies ranging between 10 and 1000 Bev. Those results are presented in two curves: the first one, Fig. 3, gives the energy distribution of protons and K-mesons resulting from the interaction, with an average value of 1.26 Bev; the second one gives the angular distribution in the CMS, Fig. 5, and is very anisotropic with most of the particles being ejected in the forward and backward directions. Further, it is observed that the ratio of the backward to the forward particles is about 2. We also make use of the experimental conclusion that the average transverse momentum for all secondary particles is independent of primary and secondary energies and has the value

$$p_t = .31 \text{ Bev/c}$$

for the heavy particles.

Using formulas (22) and (23), then, and following the same procedure as in the case of pions, we determine the kinetic energies and angles of ejection in the laboratory system corresponding to heavy particles of different energies. The results are indicated in Table III.

E' total energy in CM Bev	θ' in CM	Forward in CM		Backward in CM	
		KE in LS, Bev	θ, LS	KE in LS, Bev	θ, LS
0.8 (*)	29°28'	3.333	4°41'	.337	27°45'
0.988	90°	1.932	6°33'		
1.000	60°	2.42	5°26'	1.48	8°
1.26 (+)	21°37'	4.86	3°06'	.596	14°49'
1.50	15°22'	6.5	2°25'	.344	20°48'
2.00	10°06'	9.63	1°42'	.039	41°19'

TABLE III

(*) K-meson (+) Average energy

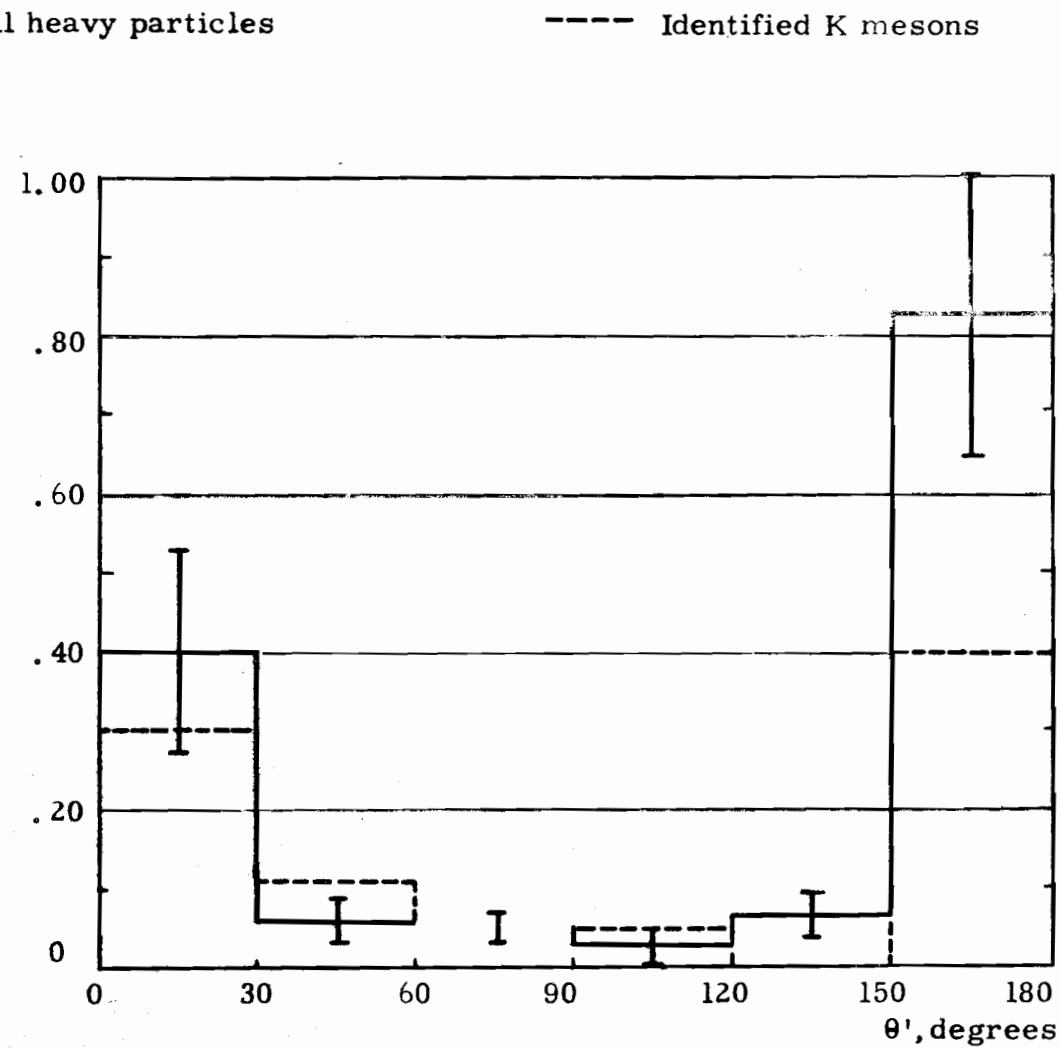

Fig. 5. - Angular distribution of heavy particles in the CMS. - (Ref. 2). -

Observation of this table leads to the following conclusions, valid under our assumptions:

(a) Even the most energetic particles, ejected backwards in the CMS, will appear as ejected forward in the laboratory system with a maximum angle of about 42°. The kinetic energy of those particles in the LS is in general low, of the order of 500 Mev for the average particle, or less, so we identify them with N_g. We assume that they are isotropically distributed within a cone of half-angle 42°.

(b) The particles ejected forward in the CMS appear in the laboratory frame under very small angles, at the most about 7°, and will have energies of the order of Bev. We identify them with n_p, and we further assume that they have an isotropic distribution within the cone of half-angle 7°.

(c) From Hansen and Fretter data for the angular distribution in the CMS, reproduced in Fig. 5, it is evident that about double numbers of heavy particles are ejected backwards than ejected forward. Thus, after (a) and (b), we write;

$$2n_p = N_g \tag{24}$$

and since $n_p = 1$, we have

$$N_g = .5$$

Considering now in more detail the above cases, we distinguish grey protons - with an average kinetic energy of

$$\langle E \rangle = .500 \text{ Bev.}$$

they are produced within a solid angle

$$\Omega_3 = 2\pi(1 - \cos 42) = 1.612 \text{ sterad.}$$

i.e., we have per interaction

$$n_3 = \frac{.500}{1.612} = .31 \text{ protons/sterad.}$$

High energy heavy particles. This group includes protons and K-mesons, with an average kinetic energy

$$\langle E \rangle = 4.86 \text{ Bev}$$

that are ejected within a cone of half-angle 7°, that is, within a solid angle

$$\Omega_4 = 2\pi(1 - \cos 7^{\circ}) = .0468$$

Hwnce, per interaction

$$n_4 = \frac{1.000}{.0468} = 21.35 \text{ heavy particles/sterad.}$$

VIII. π^0 mesons

For the π^0 mesons the following assumptions are made:

(a) The energy and angular distribution is equal to those of the charged mesons and their number is equal to one-half of the number of charged mesons.

(b) Practically as soon as born, they decay into two gammas which share equally the rest energy and are emitted in opposite directions in the meson frame of reference.

We are interested in the energy and angular distributions of these photons in the laboratory system. We start with the second, and as before, let θ' be the angle of ejection of a particle in the CMS, while θ is the angle at which the

particle is observed in the laboratory system. The angle transformation between the two frames of reference is given by Eq. (23)

$$\tan\theta = \frac{\sin\theta'}{\gamma_c\left(\cos\theta + \frac{\beta_c}{\beta'_i}\right)} \tag{23}$$

where

$$\gamma_c = 1/\sqrt{1-\beta_c^2}$$

is always a positive number, and where $\beta'_i c$ is the particle velocity in the center-of-mass system.

We call $\beta_c/\beta'_i = \gamma_i$. Two cases can be considered according with the values of γ_i.

(a) $\gamma_i \geq 1$. Then, the denominator of (23) will be always positive, and the sign of tangent θ will depend only on the sign of $\sin\theta'$. We study the behavior of the function $\tan\theta$. The maximum occurs when

$$\frac{d}{d\theta'}(\tan\theta) = 0$$

i.e., when

$$\frac{d(\tan\theta)}{d\theta'} = \frac{1+\gamma_i\cos\theta'}{(\cos\theta'+\gamma_i)^2} = 0$$

or

$$\cos\theta' = -\frac{1}{\gamma_i} = -\frac{\beta'_i}{\beta_c} \tag{25}$$

Since $\gamma_i \geq 1$, the maximum exists and $\tan\theta$ will increase up to the value of θ' defined by (25) and then will decrease until $\theta' = 180^\circ$ where $\tan\theta = 0$. Therefore, the corresponding angles θ are between 0 and $\pi/2$, and the particles are ejected only forward in the laboratory system.

(b) $\gamma_i < 1$. This is the case of practical interest when the ejected particles are gamma rays, (for which $\beta'_i = 1$). Here, Eq. (25) indicates that the function tan θ does not have a proper maximum. The function will increase all the time becoming infinite for the value of θ that makes the denominator of (23) zero, i.e. for

$$\cos \theta' = - \gamma_i \tag{26}$$

Let θ'_m be the value of θ' that satisfies Eq. (26). We observe that θ'_m is such that $\frac{\pi}{2} < \theta'_m < \pi$. For values of θ' less than θ'_m, the function tan θ is positive, hence the angles θ are between 0 and $\pi/2$, and the corresponding particles are ejected forward in the laboratory system. For values of θ' such that $\theta'_m < \theta' \leq \pi$, the tan θ is negative, thus

$$\frac{\pi}{2} < \theta < \pi$$

and the particles are ejected backard in the LS. Note that $\frac{d(\tan \theta)}{d\theta'} > 0$, so the behavior of the function tan θ is as indicated approximately in Fig. 6.

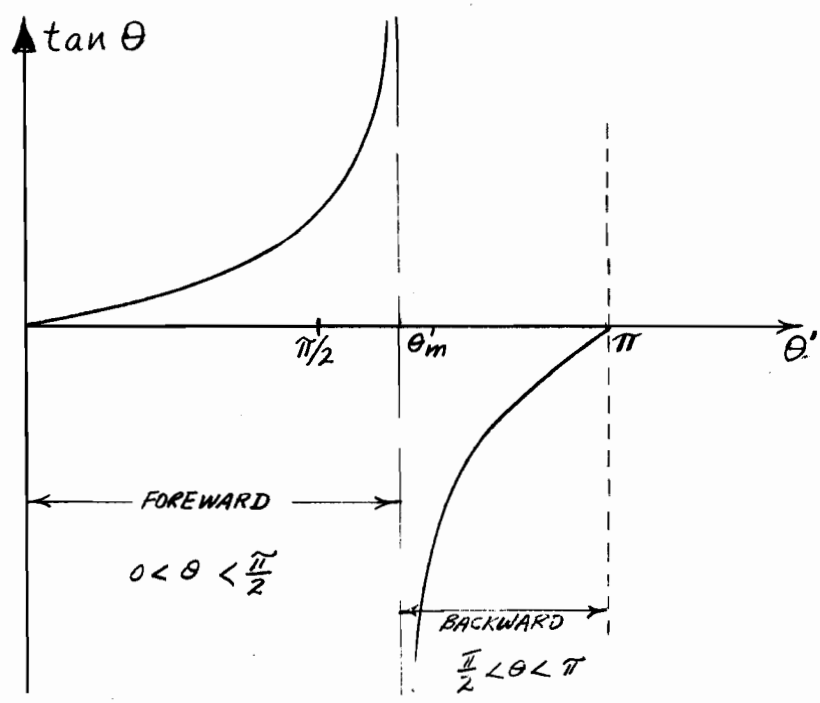

The important result is that for an isotropic distribution in the CMS the ratio of forward to backward photons in the laboratory system depends only on θ'_m, that is, on the value of β_c, which in turn depends upon the energy of the original particle. For high enough initial energy, $\beta_c \to 1$, hence $\theta'_m \to \pi$, and all the photons will appear as ejected forward in the LS. On the other hand, if the energy of the initial particle is small, the ratio $\gamma_i = \beta_c/\beta_i$ will decrease, θ'_m will approach $\pi/2$, and the number of particles ejected backward and forward will tend to be equal. These considerations can be expressed more precisely if we define a parameter.

$$r = \frac{n^o \text{ of forward particles}}{\text{total } n^o \text{ of particles}} \tag{27}$$

Now, the fractional number of particles emitted within the cone in $d\theta'$ about θ' is, for an isotropic distribution in the CMS

$$n(\theta')\, d\theta' = \frac{1}{2} \sin\theta'\, d\theta'$$

so that the total number of particles emitted within a cone of half-angle θ' is given by the integral

$$\int_0^{\theta'} n(\theta')\, d\theta' = \frac{1}{2}\int_0^{\theta'} \sin\theta'\, d\theta' = \frac{1 - \cos\theta'}{2}$$

In particular, if $\theta' = \pi$, the integral is 1. In equation (27), then

$$r = \frac{1 - \cos\theta'_m}{2}$$

which will take the value .5 for $\theta'_m = \pi/2$, or 1 for $\theta'_m = \pi$.

Eq. (27) will give also, for an arbitrary θ', the fractional number of particles emitted within a cone of half-angle θ'.

Recalling the energy distribution of the pions determined in #6, we consider two cases of interest.

Case (a). Low energy π^o.

We understand by this all the π^o with total energy less than .5 Bev in the LS. As indicated before, they have an average energy $E_o = .39$ Bev, with $\beta_c \cong 0.93$ and $\gamma_c \cong 2.72$. Therefore, using Eq. (26)

$$\cos \theta'_m = -0.93$$

or

$$\theta'_m = 158^o 26' .$$

The percentage of forward photons is then

$$r = \frac{1 + 0.93}{2} = .965 \qquad \text{or } r = 96.5\%.$$

Further, we assert that most of the particles will be ejected within a cone of relatively small half-angle. To show this, we proceed as follows: giving values to r, using Eq. (27) we calculate the value of the half-angle θ' of the cone of emission in the CMS. Then, using Eq. (23), we evaluate the corresponding θ, i.e., the half-angle of the cone in the LS for those particles The results are summarized in Table IV, while Fig. 7 indicates the percentages of particles emitted within different cones in the laboratory frame.

r%	θ' (CMS)	tan θ	θ (LS)
50	90°	.395	$21^o 33'$
75	120°	.741	$36^o 32'$
80	$126^o 52'$	.892	$41^o 44'$
90	$143^o 08'$	1.698	$59^o 30'$
96.5	$158^o 26'$	∞	90°

TABLE IV

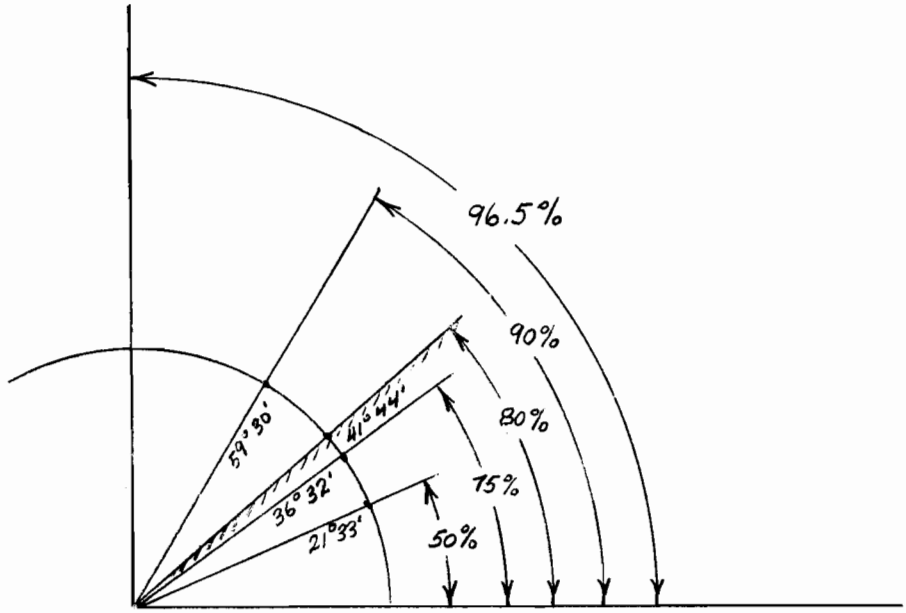

Figure 7.
Angular distribution of gammas in LS, for case (a).

Inspection of the figure leads to the following conclusion. Most of the photons are ejected in the forward direction, and among these, a great majority is within a cone of half-angle of about 42°.

Case (b). High energy π^{0}.

We assume for this case an average energy for the pions of 2 Bev in the LS. Then, the corresponding values of the parameters are

$$\beta_c = .9975 \qquad \gamma_c = 14.152$$

and

$$\cos \theta'_m = -\gamma_i = -0.9975 \quad \text{or } \theta'_m = 176^{\circ} \text{ and } r = 99.8\%.$$

We repeat the calculations the same way as before, obtaining the numerical results indicated in Table V and in Fig. 8.

r%	θ' (CMS)	tan θ	θ (LS)
50	90°	.0708	$4^{\circ}03'$
75	120°	.123	$7^{\circ}01'$
80	$126^{\circ}52'$	.142	$8^{\circ}05'$
90	$143^{\circ}08'$	.2147	$12^{\circ}07'$
99.8	176°	∞	90°

TABLE V

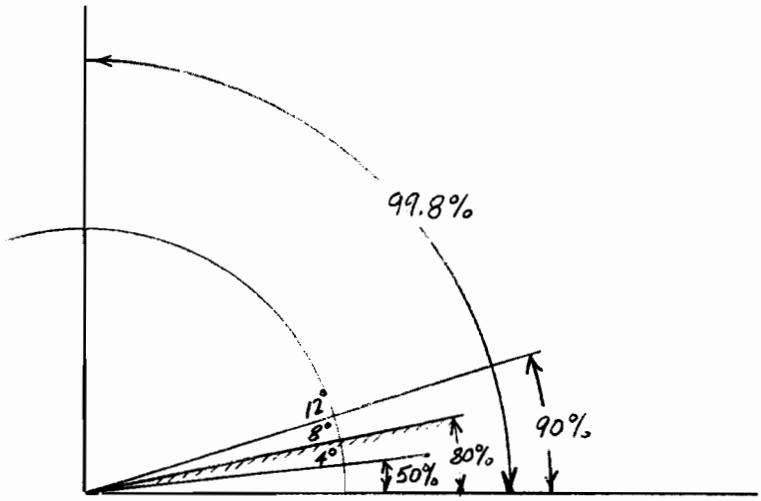

Figure 8.
Angular distribution of gammas in LS for case (b).

Here again, the conclusion is that practically all the particles are ejected in the forward direction, the most of them within a cone of half angle 8°.

We study now the distribution in energy of the gammas, finding at the same time, in a more sophisticated way, a corroboration of the previous conclusions. In the frame of reference of the meson (CMS), each photon has an energy

$$E'_1 = E'_2 = \frac{m_o c^2}{2}$$

and a momentum equal to

$$p'_1 = p'_2 = \frac{m_o c}{2}$$

where m_o is the meson rest mass. In the laboratory frame, the energy is

$$E_i = (E'_i + \bar{p} \cdot \bar{\beta}_c c)\gamma_c \tag{22}$$

or also

$$E_i = \frac{E_o E'_1}{m_o c^2} + \frac{p_o p'_i}{m_o} \cos\theta' \tag{28}$$

Replacing E'_i and p'_i by their values

$$E_i = \frac{1}{2}(E_o + p_o c \cos\theta') \tag{29}$$

where E_o, p_o are the total energy and the momentum of the π^o. Thus, the minimum and maximum energies of a gamma ray are

$$(E_i)_{min} = \frac{1}{2}(E_o - p_o c) \tag{30}$$

$$(E_i)_{max} = \frac{1}{2}(E_o + p_o c) \tag{31}$$

In the frame of reference of the π^o, the probability of emission of a photon is the same in all directions. Therefore, the average value of $\cos\theta'$ is zero, and the average value for E_i is

$$\langle E_i \rangle = \frac{1}{2} E_o \tag{32}$$

By conservation of energy

$$E_o^2 = (E_1 + E_2)^2 = p_o^2 c^2 + (m_o c^2)^2 \tag{33}$$

and by conservation of momentum

$$E_1 \cos\theta_1 + E_2 \cos\theta_2 = pc \tag{34}$$

$$E_1 \sin\theta_1 - E_2 \sin\theta_2 = 0 \tag{35}$$

where θ_i are the angles of emission of the photons with respect to the meson line of flight. Eliminating $p_o c$ between Eqs. (33) and (34), we get

$$(m_o c^2)^2 = E_1^2 \sin^2\theta_1 + E_2^2 \sin^2\theta_2 + 2E_1E_2 - 2E_1E_2 \cos\theta_1 \cos\theta_2$$

and using Eq. (35)

$$(m_o c^2)^2 = 2E_1E_2(1 - \cos\theta) = 4E_1E_2 \sin^2\frac{\theta}{2}$$

where $\theta = \theta_1 + \theta_2$. Solving for $\sin\frac{\theta}{2}$

$$\sin\frac{\theta}{2} = \frac{m_o c^2}{2\sqrt{E_1E_2}} \tag{36}$$

The minimum value of θ will correspond to the case $E_1 = E_2 = \frac{E_o}{2}$, that is, when each photon has the average energy. In that case, Eq. (36) becomes

$$\sin \frac{\theta_m}{2} = \frac{m_o c^2}{E_o} \tag{37}$$

Let $n(\theta') d\theta'$ be the number of gammas emitted in $d\theta'$ about θ', per photon produced. Since the distribution is isotropic in the CMS, then it follows

$$n(\theta') \, d\theta' = \frac{1}{2} \sin \theta' \, d\theta' \tag{38}$$

The photons emitted in $d\theta'$ about θ' will have energies between E_1 and $E_1 + dE_1$ in the LS. By differentiation of Eq. (29) we obtain in absolute value

$$dE_1 = \frac{1}{2} p_o c \sin \theta' \, d\theta' \tag{39}$$

Observing that

$$n(E_1) dE_1 = n(\theta') \, d\theta'$$

by combining (38) and (39) we get

$$n(E_1) \, dE_1 = \frac{1}{p_o c} \, dE_1 \tag{40}$$

This equation expressed the fractional number of cases in which either one of the two photons has energy in dE_1 about E_1. But we want to relate this number to the angle $\theta = \theta_1 + \theta_2$. For that, we make use of Eq. (36), re-written as

$$\sin \frac{\theta}{2} = \frac{m_o c^2}{2\sqrt{E_1 (E_o - E_1)}} \tag{41}$$

By differentiation

$$\cos \frac{\theta}{2} \, d\theta = \frac{m_o c^2}{2} \frac{2E_1 - E_o}{\left[E_1 (E_o - E_1)\right]^{3/2}} \, dE_1 \tag{42}$$

Solving (41) for E_1 we obtain

$$2E_1 - E_o = \frac{m_o c^2}{\sin\frac{\theta}{2}} \sqrt{\frac{E_o^2}{(m_o c^2)^2} \sin^2\frac{\theta}{2} - 1}$$

and also

$$\frac{1}{\left[E_1(E_o - E_1)\right]^{3/2}} = \frac{2^3 \sin^3\frac{\theta}{2}}{(m_o c^2)^3}$$

By substitution in (42)

$$dE_1 = \frac{m_o c^2}{4} \times \frac{\cos(\theta/2)\, d\theta}{\sin^2\frac{\theta}{2}\sqrt{\left(\frac{E_o}{m_o c^2}\right)^2 \sin^2\frac{\theta}{2} - 1}} \tag{43}$$

Again, if we represent by $n(\theta)\, d\theta$ the fractional number of cases in which the angle between the two photons is between θ and $\theta + d\theta$, we notice that $n(\theta)\, d\theta = n(E_1)\, dE_1$, and combining Eqs. (40) and (43) we have

$$n(\theta) = \frac{m_o c \cos(\theta/2)}{4p_o \sin^2\frac{\theta}{2}\sqrt{\left(\frac{E_o}{m_o c^2}\right)^2 \sin^2\frac{\theta}{2} - 1}} \tag{44}$$

We observe now that this function becomes infinite when

$$\sin^2\frac{\theta}{2} = \left(\frac{m_o c^2}{E_o}\right)^2$$

that is, according with (37), for $\theta = \theta_m$. Therefore, although the value of θ_m depends on the initial energy E_o of the π^o, in all cases the great majority of the photon pairs produced form an angle close to θ_m in the LS. Hence, for each individual photon the angle θ_i with respect to the meson line of flight will range between 0 and θ_m, that is, most of the photons will be within a cone of half-angle θ_m. Furthermore, we saw that when θ takes the minimum value θ_m

the energy of each photon is equal to $E_o/2$, i.e., the average energy. Thus, if most of the photons form the angle θ_m, they will also have the average energy $E_o/2$. We also assume an isotropic distribution within the cone of half angle θ_m.

We apply this result to the two cases of interest.

Case (a). Low energy π^o.

The average energy of the pion being .38 Bev, we obtain

$$\sin \frac{\theta_m}{2} = \frac{.140}{.380} = 0.368 \qquad \text{or } \theta_m = 43^o 12'$$

and the average energy of the photons is

$$\langle E_i \rangle = .19 \text{ Bev.}$$

Case (b). High energy π^o.

The average energy for this group was assumed to be 2 Bev. Then

$$\sin \frac{\theta_m}{2} = \frac{.14}{2} = .07 \qquad \text{or } \theta_m = 8^o$$

and the average energy of the photons is

$$\langle E_i \rangle = 1 \text{ Bev.}$$

We observe that there is a perfect agreement with the results obtained before.

This far, we have considered the distribution of the photons with respect to the meson line of flight, but we are really interested in the angular distribution of the gammas in the laboratory frame. If $n_\gamma(\theta_\gamma)\, d\theta_\gamma$ represent the number of photons emitted within the cone in $d\theta_\gamma$ about θ_γ, we can predict some conditions that this function must satisfy.

(i) It is a function not only of the angle θ_γ, but also of θ and θ_1, where θ is the angle of emission of the photon with respect to the π^o line of flight, and has

therefore a maximum value θ_m, and θ_1 is the angle between the direction of the π^o and the direction of the incident particle, with a maximum value of α. Thus

$$n_\gamma = n_\gamma (\theta_\gamma, \theta, \theta_1)$$

(ii) It is a positive number: $n_\gamma \geqslant 0$.

(iii) For each pair of values θ, θ_1, the angle θ_γ can take any value such that

$$\theta_1 - \theta < \theta_\gamma < \theta_1 + \theta$$

(iv) The maximum value for θ_γ is $\theta_\gamma = \theta_m + \alpha$

Hence,

$$n_\gamma (\theta_m + \alpha) = 0.$$

Nevertheless, we are not interested in an exact expression for n_γ, and we assume that the photon distribution is isotropic within the cone of half-angle $\theta_{mi} + \alpha_i$, where i = 1, 2 refers to the two cases considered above.

Let n_o be the number of π^o mesons produced per interaction, f_1 the fraction of them with energies below 500 Mev, $f_2 = 1 - f_1$ the fraction with energies above 500 Mev. The number of photons per interaction, per steradian will be

$$N_\gamma = \frac{f_i n_o}{\pi \left[1 - \cos (\theta_{mi} + \alpha_i)\right]} \tag{45}$$

Using numbers:

<u>Case (a).</u> $n_o = 2.25/2 = 1.125$

$f_1 = 0.56$

$\theta_{m1} = 43^o$ $\qquad N_{\gamma_1} = .119 \ \frac{\text{photons}}{\text{sterad}}$

$\alpha_1 = 90^o$ $\qquad$ and $\theta_\gamma = 43^o + 90^o = 133^o$

Case (b). $f_2 = 0.44$

$\theta_{m2} = 8^o$ $\qquad N_{\gamma 2} = 3.21 \quad \frac{\text{photons}}{\text{sterad}}$

$\alpha_2 = 10^o$ $\qquad$ and $\theta_\gamma = 8^o + 10^o = 18^o$

IX. Neutrons

The energy and angular distribution of the neutrons is assumed to be equal to those of the protons, as analyzed in detail in paragraph #7.

X. Interaction of secondary particles.

We are interested now in determining if the secondary particles can suffer a second interaction before reaching the walls of the vacuum tank. For that, we estimate the mean free path, using the same value for the cross-section, and assuming a pressure of 10^{-8} mm. Hr. Then,

$$E = n\sigma = 10^{18}\, p\sigma = 25 \times 10^{-17}$$

or

$$\lambda = 4 \times 10^{15} \text{ cm.}$$

Hence, secondary particles will reach the walls without further interactions.

In particular, the charged mesons could decay in flight into μ-mesons. Let us calculate the average distance traversed before decay. If $\tau = 2.6 \times 10^{-8}$ sec. is the mean life of the π-meson at rest, its apparent half-life when moving with a velocity of βc is

$$\frac{\tau}{\sqrt{1 - \beta^2}} = \tau$$

and the distance traveled in the laboratory frame before decaying is

$$d = \beta c \tau \gamma = \frac{p\tau}{m_\pi} = \frac{\tau}{m_\pi c} \sqrt{E^2 - (m_\pi c^2)^2} \tag{46}$$

For the $\pi^{\pm}$ of average energy $E \approx 0.39$ Bev, then

$$d_1 \approx 1970 \text{ cm},$$

and for the pions of high energy, $E \approx 2$ Bev,

$$d_2 \approx 1.11 \times 10^4 \text{ cm}.$$

Thus, no μ-mesons will be formed within the tank, although they will appear in the iron and will have to be considered in further calculations.

XI. Summary of results

In Table VI are listed the particles resulting from the interaction of one 15 Bev proton with one nucleon at rest, as well as their estimated energies and angular distributions. It must be emphasized that the results are valid provided the target is a light nucleus otherwise, the multiplicities will be different.

TABLE VI

Type of particle	Average energy in LS, Bev	Half-angle of cone of ejection, LS	Number per collision	Number per collision per sterad
$\pi^{\pm}$	.39	90°	1.065	.17
$\pi^{\pm}$	2.05	7°	.835	13.67
p (a)	.50 (b)	42°	.50	.31
p or K meson (a)	4.86 (b)	7°	1.00	21.35
photon	.19	133°	1.26	.119
photon	1.00	18°	.988	3.21

(a) Same for neutrons
(b) Kinetic energy

REFERENCES

1. Citron & Gentner - Further considerations about the radiation shielding for 30 Bev protons. CERN, PS/WG3 (1953).

2. Hansen & Fretter - Nuclear interactions in Carbon produced by Cosmic Rays with energies between 10^{10} and 10^{12} ev. Internal Report. (1959).

3. Kent Dedrick - The kinematics of high-energy collisions. Microwave laboratory, Stanford University. Internal Report #574. (1959).

4. B. Rossi - High-energy particles. Prentice Hall (2nd printing), (1956).

5. Progress in Cosmic Ray Physics - J. G. Wilson editor, North Holland Publishing Co., Vol. I. p. 11, Amsterdam (1952).

6. Id. id, Vol. II., Amsterdam (1954).

7. Id. id, Vol. III, Amsterdam (1956).

8. Id. id, Vol. IV, Amsterdam, p. 341, (1958).

9. Wilmot N. Hess, Rev. Mod. Phys. 30, p. 368, (1958).

10. Camerini et al., Phil. Mag. 41(I), p. 413, (1950).

11. Camerini et al, Phil. Mag. 42(II), p. 1241, (1951).

12. H. Messel, Proc. Phys. Soc., 65, p. 465, (1952).