Fermilab Library
0 1160 0038799 7

512

MIDWESTERN UNIVERSITIES RESEARCH ASSOCIATION

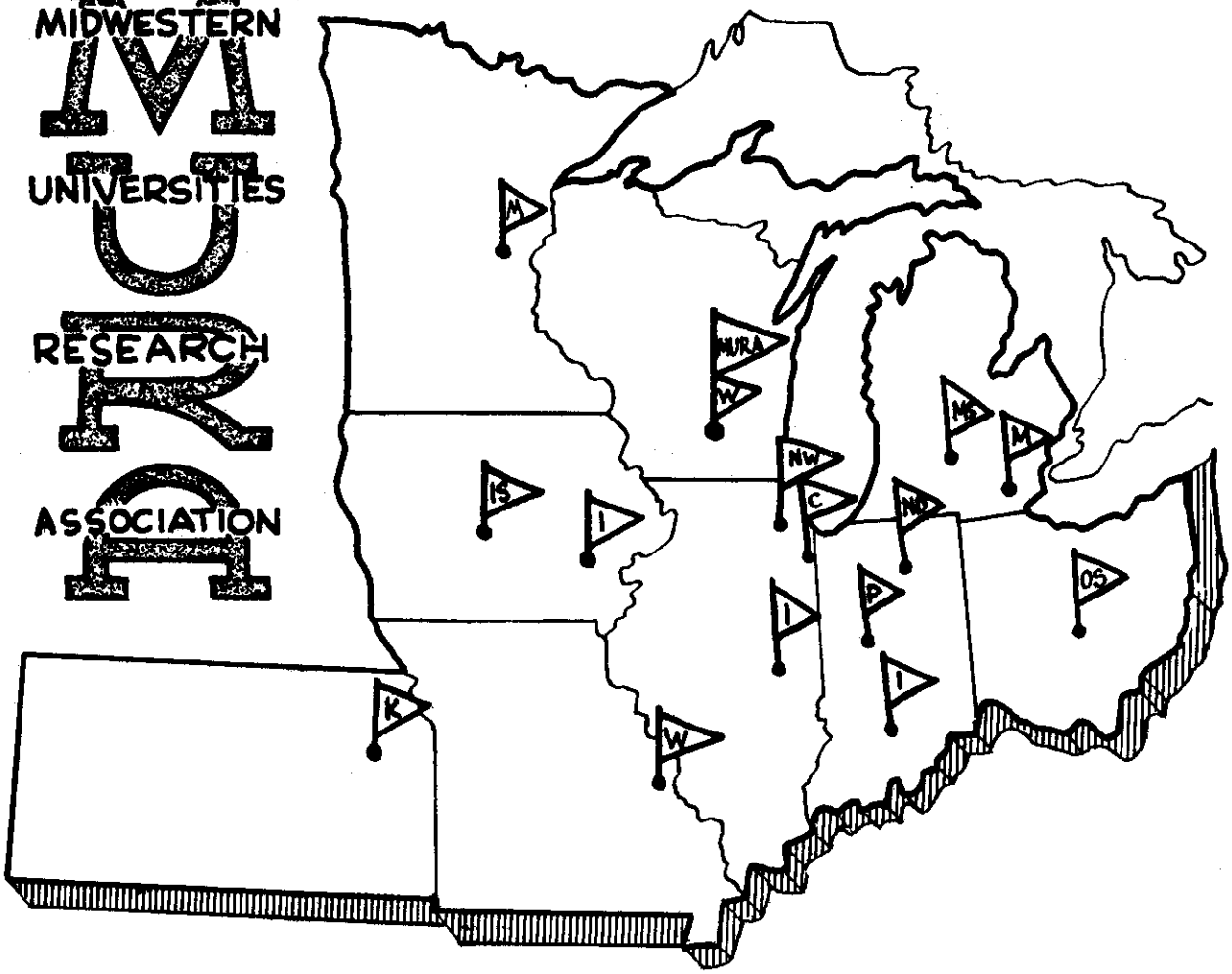

FERRITE CAVITY MODEL

Robert Stump

REPORT NUMBER 512

MURA-512
Internal

MIDWESTERN UNIVERSITIES RESEARCH ASSOCIATION*
2203 University Avenue, Madison, Wisconsin

FERRITE CAVITY MODEL

Robert Stump**

September 9, 1959

ABSTRACT

In this report the elementary considerations in the design of ferrite loaded cavities for large FFAG Accelerators are reviewed. A model cavity has been built and some of the operating characteristics of the model are given.

* AEC Research and Development Report. Research supported by the Atomic Energy Commission, Contract No. AEC AT(11-1)-384.

**University of Kansas, Lawrence, Kansas.

INTRODUCTION

To obtain high r.f. voltages as required in a large accelerator, it is necessary that the accelerating systems be tuned. The accelerating elements may be either drift tubes or accelerating cavities. Due to the rather large radial extent of the vacuum system in an FFAG accelerator, drift tubes are not practical. Thus, it is necessary to introduce a number of tuned cavities around the machine. These may be tuned either mechanically or by use of ferrite. This report gives some of the considerations in designing a ferrite loaded cavity, and a brief description of results on a model cavity now being tested.

MECHANICAL PROPERTIES OF FERRITE

Some pertinent properties of ferrites are listed in Table I. These numbers are quite variable from one type of ferrite to another, but may be used in preliminary estimates. Two properties should be noted especially: the high coefficient of expansion and the low strength of the material. Since the ferrite temperature will rise in operation, there must be a mechanical structure which will allow it to expand without undue stress. Also, since the strength is not particularly high, there must be mechanical support for the ferrite since it is incapable of standing alone in a size large enough to be useful in an FFAG accelerator. The present proposal, to be tested on a large scale model, is to obtain the ferrite in the form of bricks of dimensions about 1 x 3 x 8 inches and stack these on a suitable frame, either with sufficient clearance between bricks or with enough flexibility in the frame to allow for thermal expansion.

TABLE I

Mechanical Properties of Ferrite

Specific Gravity	4.5 (or 5 tons/m^3)
Specific Heat	.17 cal/gm
Youngs Modulus	1.5×10^4 Kg/mm^2
Crushing Strength	7.3 Kg/mm^2
Tensile Strength	1.8 Kg/mm^2
Thermal Conductivity	$< 1.4 \times 10^{-2} \frac{\text{cal}}{\text{cm sec } ^\circ\text{C}}$
Coefficient of Thermal Expension	1×10^{-5} 1° C

POWER INPUT

The maximum power input to the ferrite in a cavity may be estimated as follows. Assume the ferrite is in the form of long slabs, with length and width both much greater than the thickness, and assume the sides of the ferrite are cooled to some uniform temperature. Then, a uniform power input to the ferrite will cause a temperature variation through the ferrite of

$$T_o - T = \frac{px^2}{2k}$$

where T = temperature at distance x from center of ferrite

T_o = temperature at center of slab

x = distance from center of slab

k = coefficient of thermal conductivity

p = power input per unit volume.

From this temperature variation, the stresses in the slab may be computed from the coefficient of thermal expansion of the ferrite and the value of Youngs modulus. The maximum stress will be tension on the sides with smaller compression in the center. Setting the tensile strength of the material equal to the maximum stress determines the maximum power input allowable. For a two centimeter thick slab, the maximum power input is 1.5 watts per cubic centimeter. Taking into account the fact that cooling will not be uniform on the sides of the slabs and that the corners will have much lower temperature than the sides, it appears that a limit of .1 watt per cubic centimeter is not overly conservative. This is the limit proposed in the Argonne and Brookhaven accelerators. It is planned to determine in a model cavity the maximum power allowable in any ferrite used.

The power loss in ferrite is a function of the r.f. flux B_{rf}, the frequency f

and the state of magnetization of the ferrite. For high r.f. flux density, the power loss varies as $B_{rf}^{5/2}$. The loss is proportional to f for fixed B_{rf}. If the ferrite is biassed, and the frequency increases as $\mu^{-1/2}$, then losses increase slowly with bias, i.e., $Q\mu f$ decreases slowly with bias. A reasonable starting point, then, is to assume that the ferrite must be able to be operated continuously at the lowest frequency. Modulation will cause some increase in loss at higher frequencies, but this will to some extent be compensated by the fact that the voltage is not on continuously.

The electrical properties of several useful ferrites are listed in Table II.

DESIGN OF FERRITE CAVITY

The ferrite loaded cavity may be considered in two ways. One may start with known frequency range needed and known capacity on the gap, then design the ferrite to give the minimum cost to the system in which the gap capacity is resonated with the ferrite in the desired frequency range. For a high current accelerator, however, where high voltages are needed, one may start at the other end with the known frequency and voltage determining the ferrite requirements.

The following approximate formulas are used:

$$L = \frac{\mu \mu_0 A}{\ell}$$

$$V = 2\pi B_{rf} A f$$

where

L = inductance of cavity

μ = permeability of ferrite

μ_0 = permeability of space

A = cross section area of ferrite surrounding gap

ℓ = path length of flux in ferrite around gap

B_{rf} = maximum r.f. flux allowed in ferrite

f = frequency

V = maximum cavity voltage.

As an example, consider a cavity operating from three to six megacycles with a gap capacity of 2000 mmf. Then, the inductance of the cavity must vary from 1.4 micro-henries at 3 mc to .35 micro-henries at 6 mc. From the dimensions of the gap, ℓ may be determined; in the example let us take ℓ = 10 meters. Then, to obtain an initial inductance of 1.4 μk, the product

$$\mu A = \frac{L\ell}{\mu_0} = 11.1$$

If a ferrite with permeability 240 or 250 is used, then

$$A \cong 4.5 \times 10^{-2}\ m^2$$

and the total ferrite required

$$5A\ell = 2.26 \text{ tons}$$

The maximum allowed voltage is

$$V = 2\pi \times 80 \times 10^{-4} \times 4.5 \times 10^{-2} \times 3 \times 10^6$$

$$= 6,800 \text{ volts.}$$

The r.f. power required is simply determined by the volume of ferrite and the power loss. Hence the power required is

$$P = .1 \times A \times \ell \times 10^6$$

$$= 4.5 \times 10^4 \text{ watts.}$$

and, assuming 50% efficiency, the input power to the driving tubes is 90 kw.

TABLE II
Manufacturers Data

Ferrite		μ_0	Bias Current	B_{rf}
Philips IV B		250	8 $\frac{\text{ampturns}}{\text{cm}}$	80 Gauss
IV C		120	25	90
Allen Bradley R-02		240	12	70
	Sample	120*	Not Known	80

μ_0 is the permeability with no bias current.

Bias Current is the bias in ampturns per centimeter required to reduce the permeability by a factor of ten.

B_{rf} is the flux density in gauss at 3 megacycles which will give a loss of .1 watts per cubic centimeter.

The $Q\mu f$ product for these materials is between 1.2 & 2 x 10^{10}. It is not at all clear that several of these specifications may be met in ferrite bricks of reasonable size.

*The effective value of μ of a ferrite ring with gaps is given approximately by $\mu_{ef} = \mu \frac{1}{1+\frac{\delta L}{L}\mu}$. If μ is taken to be 250, L to be 19 cm and δ L to be 1 mm, the value of μ gotten from the formula is about 110. Gaps of of this size were certainly present due to the very poor finish on the blocks.

With this design, there is a rather low voltage. To increase the voltage, the ferrite area must be increased. This may be done by using ferrite of lower μ, by decreasing the capacity of the gap and thus increasing the area of ferrite required, or by extending the length of the ferrite path. Another possible solution is to increase the area of the tank not containing ferrite so that appreciable flux goes around the gap in a path not within the ferrite. This may be done here since the frequency range is small. For larger frequency ranges it is necessary to require most of the flux to go through the ferrite, otherwise the amount of bias needed to obtain the frequency variation is excessive.

The bias current required in the example is somewhat less than 8 amp turns/cm, or $\approx$ 8000 amp turns. For high repetition rate operation of the cavity this must be varied quite rapidly, both increasing since the frequency increases rapidly in the early part of the acceleration cycle, and decreasing to avoid wasting time in recycling. The maximum flux density in the ferrite due to the bias current is about 2000 gauss. To reduce this to zero in 1/100 sec. requires a voltage on the bias coil of about one volt per turn. In addition, of course, there will be power loss in the bias circuit due to the resistance of the bias coils. These are the considerations then which determine the size of the bias supply.

Similar results which were given at a MURA General Conference, are given in Table III.

If the permeability of the ferrite is low, some modification of the design is required to take into account the flux in the cavity which does not pass through the ferrite. Also, the effective permeability will be lower than μ due to gaps

between bricks. The effective Q of the system is raised by the gaps between bricks.

It should be noted that for a rough estimate, the amount of ferrite required in a machine is determined by the length around which the ferrite must go, ℓ, in meters and the required accelerating voltage per turn

$$\text{No. Tons} = \frac{5 \times \ell \times V \times 10^4}{2\pi \times 3 \times 10^6 \times 80}$$

$$\cong 3 \times 10^{-5} \ell V \text{ tons.}$$

The r.f. power dissipated in the ferrite (approximately half the r.f. power needed) is

$$\text{Power} = .6 \ell V \text{ watts.}$$

These approximations are based on a maximum power dissipation of 0.1 watt per cubic centimeter, and a flux density of 80 gauss at 3 mc. to give the maximum dissipation.

MODEL

A model of a ferrite loaded cavity having the same electrical characteristics as that in Table III, but with 1/225 times the amount of ferrite, has been built. Fig. 1. It uses 12 bricks each of dimension 2.3 x 7.5 x 18.9 cm. The capacity of the gap is 2000 $\mu\mu$f. Unfortunately, the cavity was designed for Allen Bradley type R-02 ferrite; what was obtained was a sample of somewhat lower quality (sample in Table II). At low r.f. power, the characteristics are as shown in Table IV.

A control system for the cavity has been built and operated. The power

TABLE III

Characteristics of Ferrite Cavity Using Philips IV B

Frequency range	3 - 10 mc
Gap Capacity	2000 $\mu\mu$f
	ℓ = 16 m
Weight of Ferrite	= 4.64 tons
	$A = 5.8 \times 10^{-2}\ m^2$

R.F. Power into Cavity	= 93 kw
Bias Current	= 20000 ampturns
Bias Power Supply	= 25 kw
Gap Voltage	= 10 kw.

amplifier is being built - a lower power amplifier has been used so far. A block diagram of the circuits used is shown in Fig. 2.

The only difficulty encountered with the system is in an interaction between the phase control and the amplitude control circuits. At low amplitudes this is not present. A different phase comparison circuit is being added to the high power amplifier.

In general, the system works satisfactorily. The phase comparison circuit maintains the proper bias on the ferrite so that the cavity is near resonance during the entire frequency sweep. The amplitude control maintains any desired amplitude program during the frequency sweep (providing the level never gets so low that the phase control fails) and then turns the voltage off during the frequency recycle.

The characteristics of the cavity are essentially as computed (after the correct value of μ was determined). No special care is required in stacking the bricks - in fact small changes in brick position have no effect on the cavity. It would appear, then, that in a large cavity no serious problems will be encountered. In particular it is quite pleasant to find that the ferrite bricks need not be clamped or cemented to maintain their electrical properties and all that is required is a reasonable mechanical structure.

TABLE IV

Bias Current $\frac{\text{amp turns}}{\text{cm}}$	Resonant frequency mc	μ	$\mu Q f$	Shunt Impedance of Cavity
0	5.00	118	1.12×10^{10}	320
1.6	5.72	88	1.03	325
3.2	6.54	64	.97	338
4.8	7.22	50	.90	343
6.4	7.80	41	.85	362
8.1	8.38	34	.85	382
9.7	8.79	30	.81	390
11.3	9.20	26	.77	402
12.9	9.55	23	.75	425
13.5	9.70	22	.73	430

NOTE: For a cavity filled with ferrite the shunt impedance is proportional to $Q\mu f$. Here, however, the ferrite fills only a small fraction of the cavity and the shunt impedance increases even though $\mu Q f$ decreases at higher bias.

Ferrite Cavity

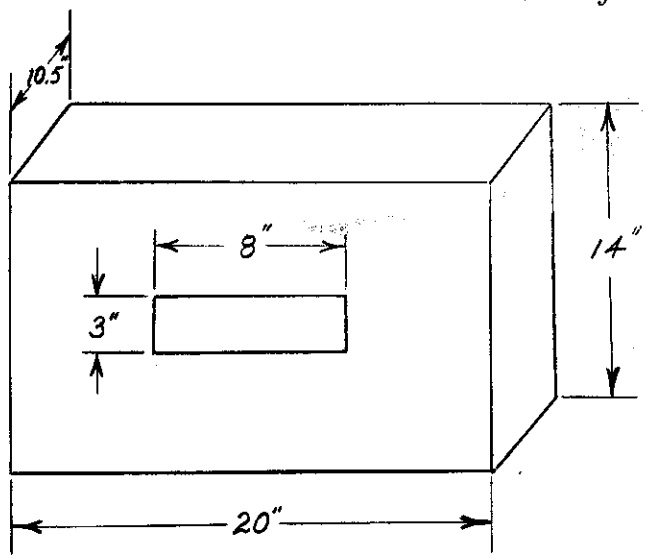

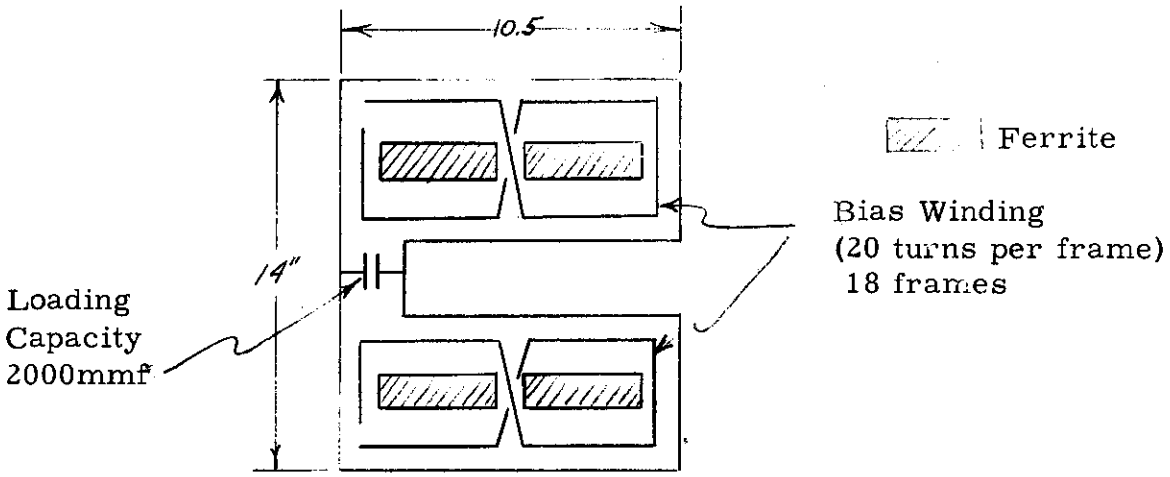

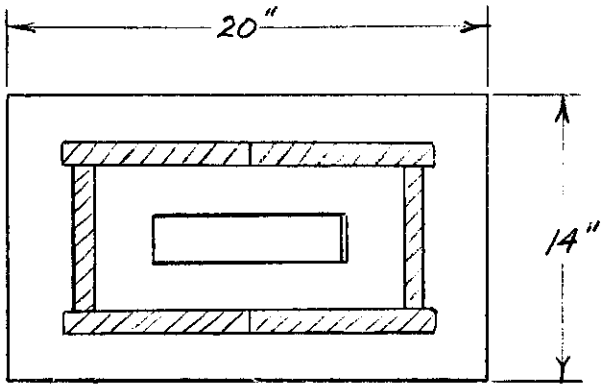

Cross Section Cut Perpendicular to Center of 20" Side

Fig. 1

Block Diagram of RF System for Ferrite Cavity

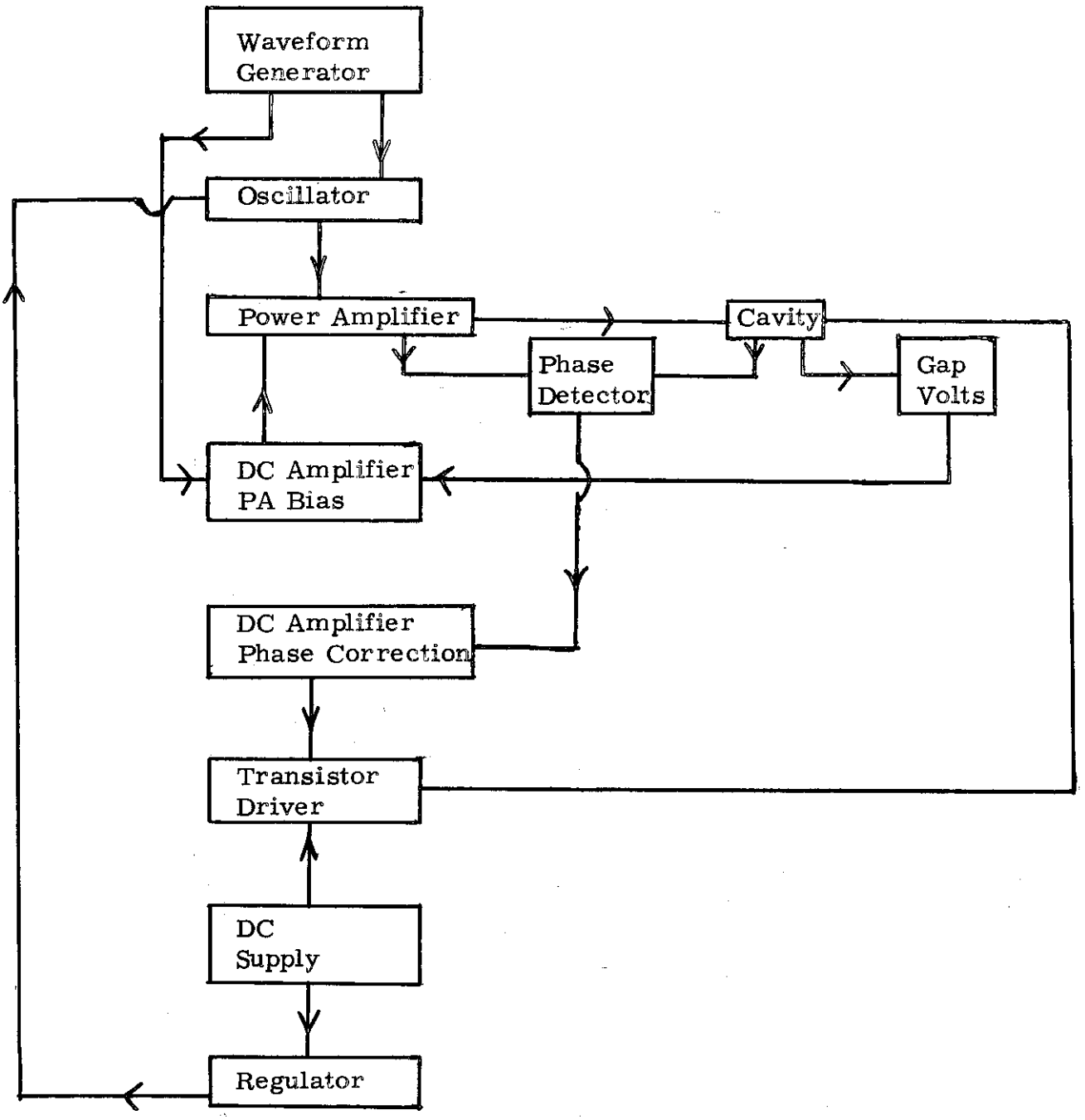

1. Waveform Generator - Drawing No. E16C1195

The Waveform Generator runs at a repetition rate of about 10 per second. The length of the "on" and "off" portion of the cycle are independently controlled. Two gates positive and negative are available on BNC connectors. The amplitude waveform is a linear rise followed by a smooth transition to constant voltage. The frequency waveform approximates the curve of frequency versus time for a large accelerator.

2. Oscillator - Drawing No. E16C1197

The oscillator frequency is determined by the bias current in a small ferrite ring . The frequency may be swept from 3 to 15 mc with suitable adjustments. The circuit at present sweeps from 5 to 9 mc. The bias current is supplied by the DC supply (#9) regulated by the regulator (#10). Two adjustments are on this circuit: The zero adjustment should be set so the base voltage on the small transistor just goes to zero each cycle; the amplitude control sets the range of the sweep. The controls are not independent.

3. Power Amplifier - Drawing No. E16C1200

The power amplifier is shunt peaked, with response flat to about 10 mc. The amplitude control input is the voltage on the drivers for the final tubes. Fixed bias (no modulation) is obtained by connecting the amplitude control input through a suitable resistor to ground.

4. Phase Detector - Drawing No. E16C1200

The phase comparison circuit compares the cavity phase with the phase

on the grid of one of the final tubes of the Power Amplifier. The output of this circuit is used to determine the correct bias current in the ferrite. The 6CL6 adjusts the dc level so the output dc level does not depend on the amplitude of the r.f. in the cavity.

5. Gap Volts.

A diode connected across the gap with suitable r.f. filtering.

6. DC Amplifier - PA Bias - Drawing No. E16C1196

This amplifier compares the cavity Gap Volts with the amplitude waveform. The amplifier output is then used to bias the power amplifier and minimize the difference between the Gap Voltage and the waveform.

7. DC Amplifier - Phase Correction - Drawing No. E16C1196

This amplifier amplifies the signal from the phase detector. The output is used to determine the ferrite bias current.

8. Transistor Driver - Drawing No. E16C1199

This circuit is the current control for the ferrite bias windings. In the automatic position, switch up, the current is controlled by the voltage on the BNC at the rear. The current is zero with the input grounded, and increases with positive input voltage. When the switch on the front is down, the current is controlled by the potentiometer on the front panel. A maximum current of about 8.5 amperes is allowed. For prolonged operation at intermediate currents (3-7 amps) a blower should be used to cool the transistors.

9. DC Supply. - Drawing No. E16C1198

Low voltage dc current supply - about 30 volts at 10 amps.

10. Regulator - Drawing No. E16C1198

The source of current used to bias the ferrite in the oscillator must be better regulated than that for the ferrite in the cavity. This regulator supplies up to several amperes at 10 volts with voltage independent of current and with very little 60 or 120 cycle ripple.