509

Fermilab Library
0 1160 0052398 9

MIDWESTERN UNIVERSITIES RESEARCH ASSOCIATION

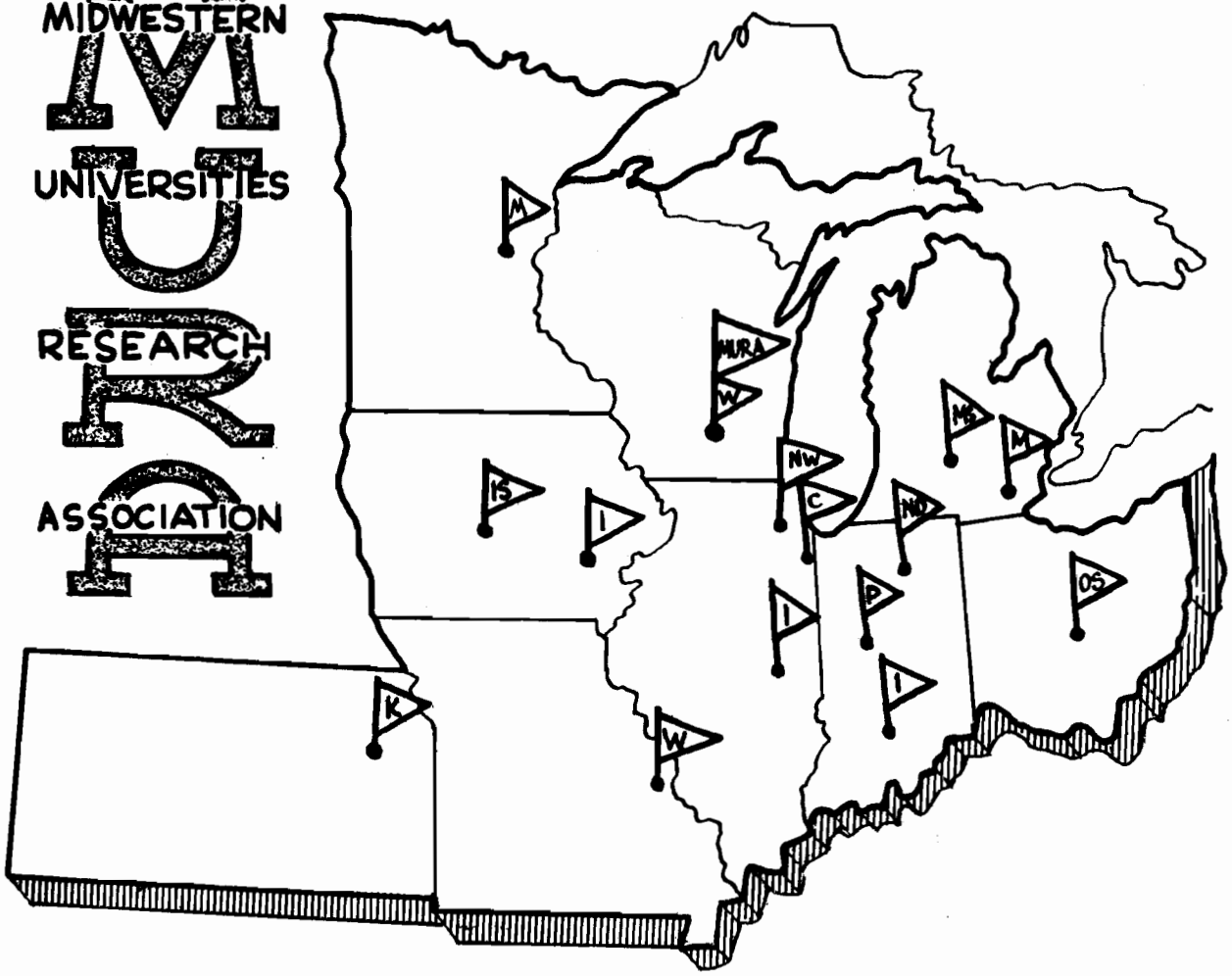

USE OF PICKUP ELECTRODE IN WISCONSIN MODEL

Robert Stump

REPORT NUMBER 509

MURA-509
Internal

MIDWESTERN UNIVERSITIES RESEARCH ASSOCIATION*
2203 University Avenue, Madison, Wisconsin

USE OF PICKUP ELECTRODE IN WISCONSIN MODEL

Robert Stump**

September 8, 1959

ABSTRACT

A pickup electrode is to be placed in the vacuum tank of the Wisconsin Model to determine the amplitude and phase of the accelerated and stacked beam. This report describes some of the systems which have been set up for use with this electrode.

* AEC Research and Development Report. Research supported by the Atomic Energy Commission, Contract No. AEC AT(11-1)-384.

** University of Kansas, Lawrence, Kansas.

The pickup electrode in the vacuum tank of the Wisconsin Model may be used in a number of ways. The electrode may be used to determine the amplitude of the accelerated beam as a function of time during acceleration, the amplitude of the stacked beam, or the phase of the accelerated beam with respect to the phase of the rf cavity. The systems for doing these things are described below.

Amplitude of Accelerated Beam

The amplitude of the accelerated beam may be followed during the acceleration cycle by observing the amplitude of the rf induced on the pickup as a function of time. Since the frequency will vary from 29.5 to 23.0 mc during this acceleration, the amplifiers used must be of sufficient band width to avoid spurious effects. It is proposed to use a line matching tube at the pickup electrode - then two Hewlett-Packard 460A amplifiers to obtain a signal large enough to be rectified and observed easily on an oscilloscope. The output of the amplifiers may also be observed directly. With a very fast oscilloscope, this system would show the details of the beam bunching during acceleration.

Stacked Beam Monitor

The pickup electrode in the vacuum tank may also be used as a monitor of the density of stacked beam as a function of energy. As the displacement oscillator passes through the stacked beam, the portion of beam in synchronism with the oscillator will be bunched and will give a signal on the pickup electrode at the frequency of the beam. A tuned amplifier connected to the pickup electrode would then give a signal, the amplitude of which is proportional to the density

of stacked beams at that frequency. Thus, the amplitude as a function of time during one pass of the phase displacement system would vary as the density of particles seen during the pass. Since the pass goes from 37 to 33 Mev in 1.75 milliseconds, the distribution of density with energy in the stacked beam may be observed. The integral of this signal would give a measure of the total current.

Phase Detectors

Two phase detecting systems have been set up to compare the cavity phase with the beam phase. In the Wisconsin Model these systems will be used mainly as a diagnostic device to determine when or how non-adiabatic beam handling occurs. In a large machine such devices are almost essential, especially to accelerate over the transition energy successfully.

The two systems are described below.

I. Single Beam System. Drawing No. E16C1192, a block diagram, is shown in Figure 1. Here, the pickup electrode in the vacuum tank gives a signal to one of the remote heads. The amplified voltage then goes to the phase detector, from which a level indicator returns a signal to the pickup head for automatic gain control. The signal from the rf cavity goes through a second channel, identical to the first, and is compared with the pickup signal in the phase detector. The output is viewed on an oscilloscope.

II. Stacked Beam System. Drawing No. E16C119384. When a stacked beam is present in the machine, the pickup electrode will give a mixed signal, mixing the pickup from the accelerated beam with that from the stacked beams. (The stacked beam is bunched by the displacement oscillator which operates

during the acceleration cycle.) Hence, a narrow band system has been developed which will respond only to the frequency of the accelerating beam. A block diagram is shown in Figure 2.

Here a frequency is first formed which is the difference between the accelerating frequency and some fixed frequency. This must be carefully filtered to eliminate traces of the fixed frequency on any harmonics. The difference frequency is then mixed with the output of the pickup electrode and with the cavity voltage to give the initial fixed frequency. The phase difference between the output of the two mixers is just the phase difference between the two signals from the pickup electrodes. The remainder of the system is narrow band to eliminate the signal from the stacked beam.

Both of these systems have been assembled and have worked adequately on signals from r.f. signal generators.

The pickup electrode in the vacuum tank is a strip insulated from the bottom of the tank. The dimensions and spacing of the strip are not known yet, but as an estimate, a strip 1" wide, 1/16" from the bottom of the vacuum tank would give a pickup voltage of about .5 volts per ampere of circulating beam. Since in each system the voltage required for proper operation is about .05 volts, there should be no problem with beam intensity.

FIGURE 1
Phase Detecting System for Single Beam

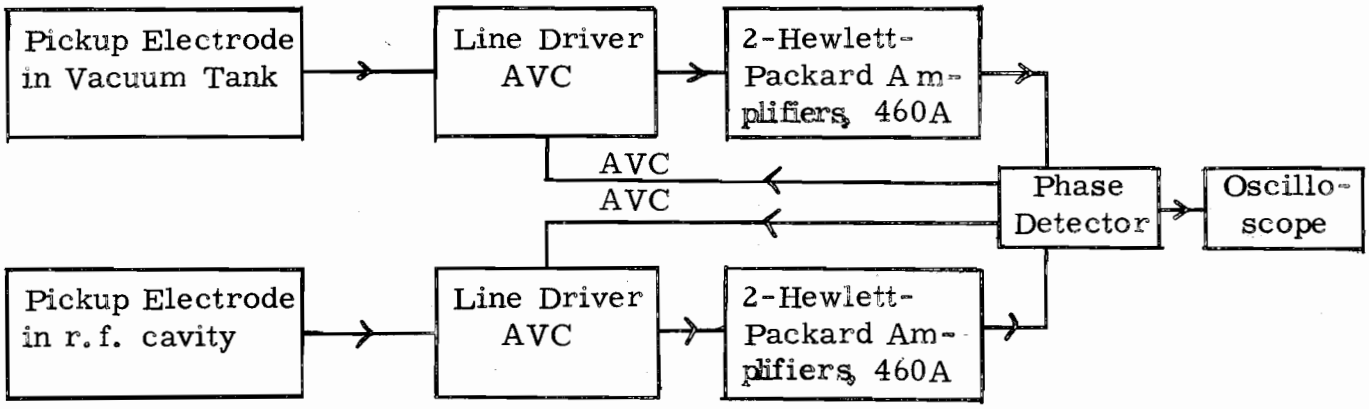
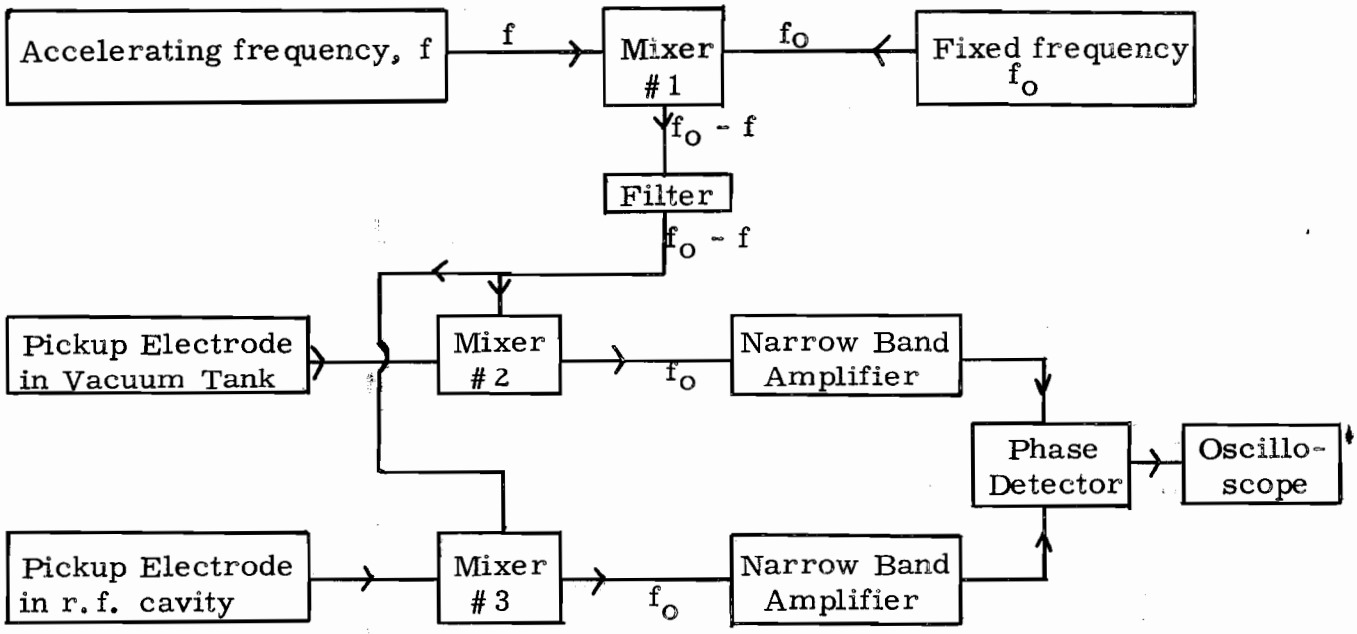
FIGURE 2
Phase Detecting System for Stacked Beam Operation