Fermilab Library
0 1160 0038738 5

436

MIDWESTERN UNIVERSITIES RESEARCH ASSOCIATION

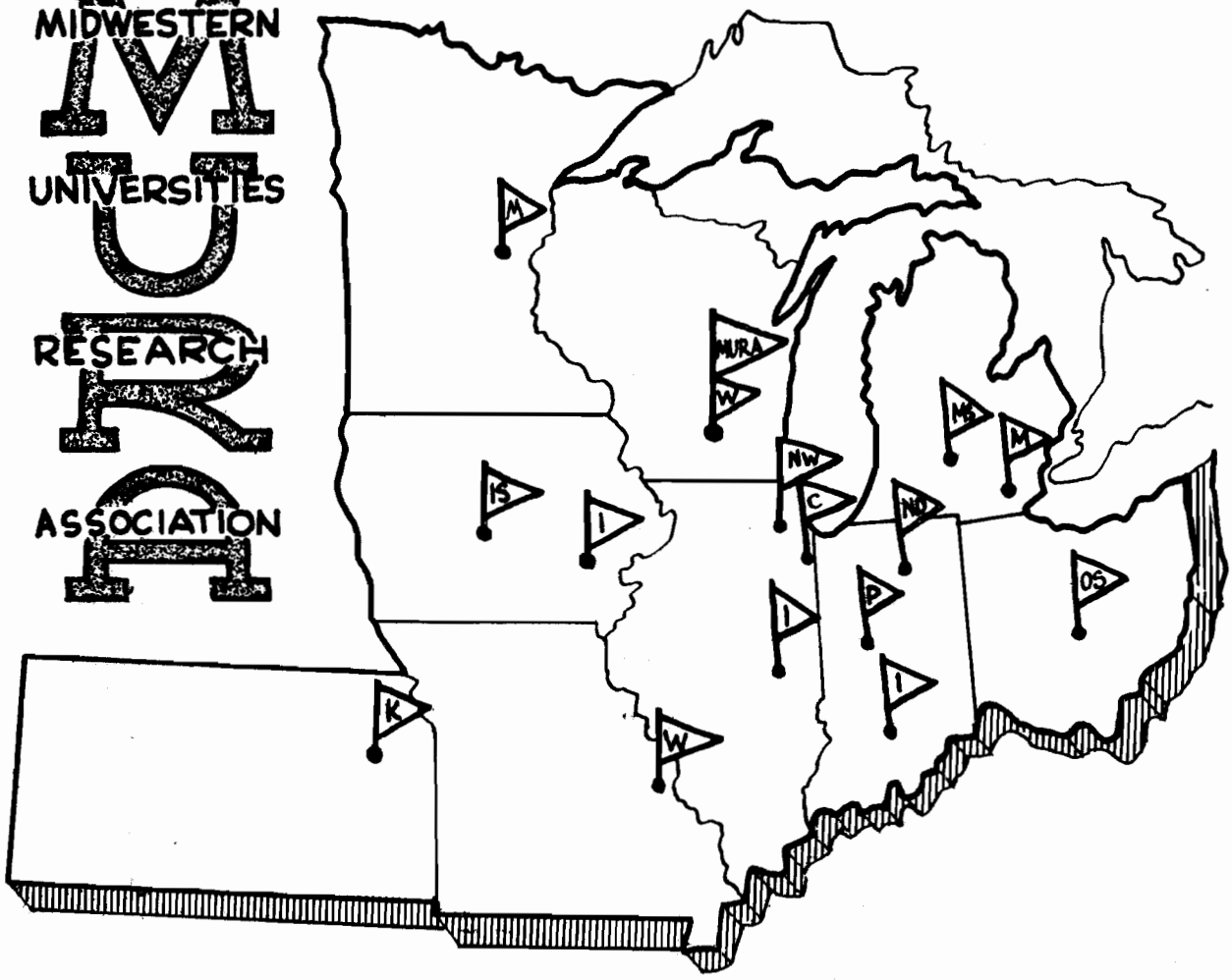

DESCRIPTION OF A FUNCTION GENERATOR

D. A. Swenson

REPORT **NUMBER** 436

MURA-436
Internal

MIDWESTERN UNIVERSITIES RESEARCH ASSOCIATION*

2203 University Avenue, Madison, Wisconsin

DESCRIPTION OF A FUNCTION GENERATOR

D. A. Swenson

November 7, 1958

ABSTRACT

A description is given of a function generator designed to generate a wide variety of voltage waveforms. The waveform is produced as a voltage on a capacitor. The capacitor is charged by currents from "elementary" charging circuits. The charging currents are turned on and off by transistors which act as switches. A block diagram is given for the function generator, and a few typical "elementary" charging circuits are described.

*Research supported by the Atomic Energy Commission, Contract No. AEC AT (11-1) 384. AEC Research and Development Report.

A description of a function generator which has been designed and built will be given in this report.

The purpose of this function generator is to generate two voltage waveforms which can be used to modulate both the frequency and amplitude of the rf accelerating field for the 40 Mev two-way model.

The frequency of a low-power oscillator can be modulated by a voltage waveform. One of the many possible ways of accomplishing this modulation is to employ in the tuned circuit of the oscillator, a capacitor whose capacity is a function of a bias voltage applied to it. By varying the bias voltage at a slow rate, the resonant frequency of the tuned circuit may be changed. In order to modulate the frequency in some particular manner as a function of time, one must merely obtain from the function generator a bias voltage which varies in a particular manner with time.

The amplitude of the rf accelerating voltage must also be varied in some particular manner throughout the course of the acceleration cycle. The amplitude may be obtained by sampling the rf gap voltage in the rf cavity. The gap voltage may be compared to the desired voltage waveform from the function generator and the gain of the amplifiers so changed to correct the amplitude.

The function generator to be described generates a wide variety of voltage waveforms. The waveform is produced as a voltage on a capacitor. The voltage is produced by currents from "elementary" charging circuits. The charging currents are turned on and off by series transistors which act as

switches. The transistor switches are actuated by bias voltages applied to the bases of the transistors. For some values of the bias voltage the transistor appears as a resistance of about one megohm in series with the charging current. For some other values of the bias voltage, the transistor appears as a two ohm resistor in series with the charging current. If the bias voltage is periodically alternated between two such values, the transistor is essentially turned on and off at this periodic rate. Suitable bias voltages in the form of square waves can be produced by bistable flip-flop circuits. The bistable circuits have two inputs; one to trigger them "on" and one to trigger them "off."

An initial timing pulse synchronized with either the 60 cps line voltage or with the angular position of a rotating condensor is fed into a bank of phantastron time-delay circuits. Pulses from these circuits which are delayed in time with respect to the initial timing pulse can be fed through a pulse shaper and used to trigger the bistable circuits.

A typical block diagram of the function generator is shown in Fig. 1. In order to provide a high degree of flexibility in the operation of the function generator, certain connections are made with banana plug jumpers. The connections between the time-delayed trigger pulses and the bistable circuits are made in this manner, as are the connections between the bistable circuits and the charging circuits.

A circuit diagram of the bistable flip-flop circuit is given in Fig. 2. The circuits have an "on" and an "off" input, and a pair of outputs. The outputs are similar in time but opposite in polarity.

The charging circuits consist of various assortments of voltages, resistors, inductors, capacitors, transistors and tubes which produce desirable charging currents. Possibly the simplest charging circuit consists of a voltage which charges the capacitor through a resistor. This circuit will be referred to as an RC circuit. A typical RC circuit and its resulting waveform are shown in Fig. 3. The waveform from this simple circuit is surprisingly close to the desired frequency modulation function.* Another charging circuit involves merely the addition of an inductor in series with the charging current. A typical RLC circuit and its resulting waveform are shown in Fig. 4. A charging circuit which pumps a constant current into the capacitor regardless of the voltage on the capacitor will be referred to as a sawtooth circuit. One possible sawtooth circuit is shown in Fig. 5.

The transistor switches employed in these circuits operate satisfactorily as long as the collector-base junction is back-biased. If the junction becomes forward-biased, the charging circuit may allow a discharging current to flow. This effect can be eliminated by placing a crystal diode in series with the charging circuit to eliminate the discharging current.

Before the voltage waveform may be repeated in a periodic manner, the capacitor must be discharged to some starting point. A typical discharge circuit is shown in Fig. 6.

Using the circuits described here and the block diagram shown in Fig. 1, one can get a wide variety of waveforms. Assuming that

*Johnston, Swenson and Rowe, MURA-426

$t_o < t_1 < t_2 < t_3 < t_4 < (t_o + 1/60 \text{ sec.})$, one finds that the RLC circuit is on from t_1 to t_2, the RC circuit is on from t_2 to t_3, the sawtooth circuit is on from t_3 to t_4 and the discharge circuit is on from t_4 to $t_o + 1/60$ sec. The voltages, resistors and inductors can be adjusted to give a waveform similar to that shown in Fig. 7.

It is possible to conceive of a large number of charging circuits which can be triggered on and off with the proper bias voltages. With the proper combination of such circuits, the desired voltage waveforms for the frequency and amplitude modulation may be obtained.

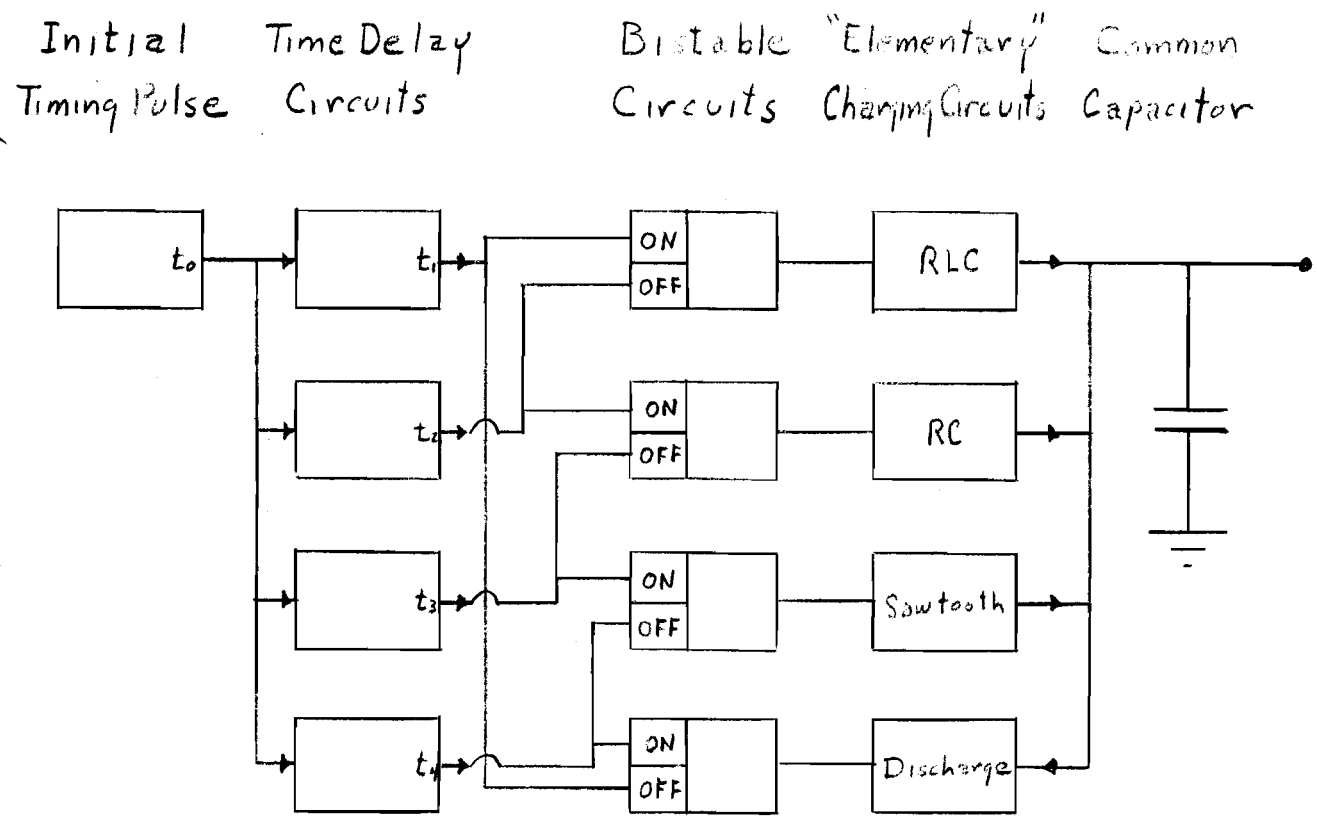

Fig. 1. Block Diagram of Function Generator

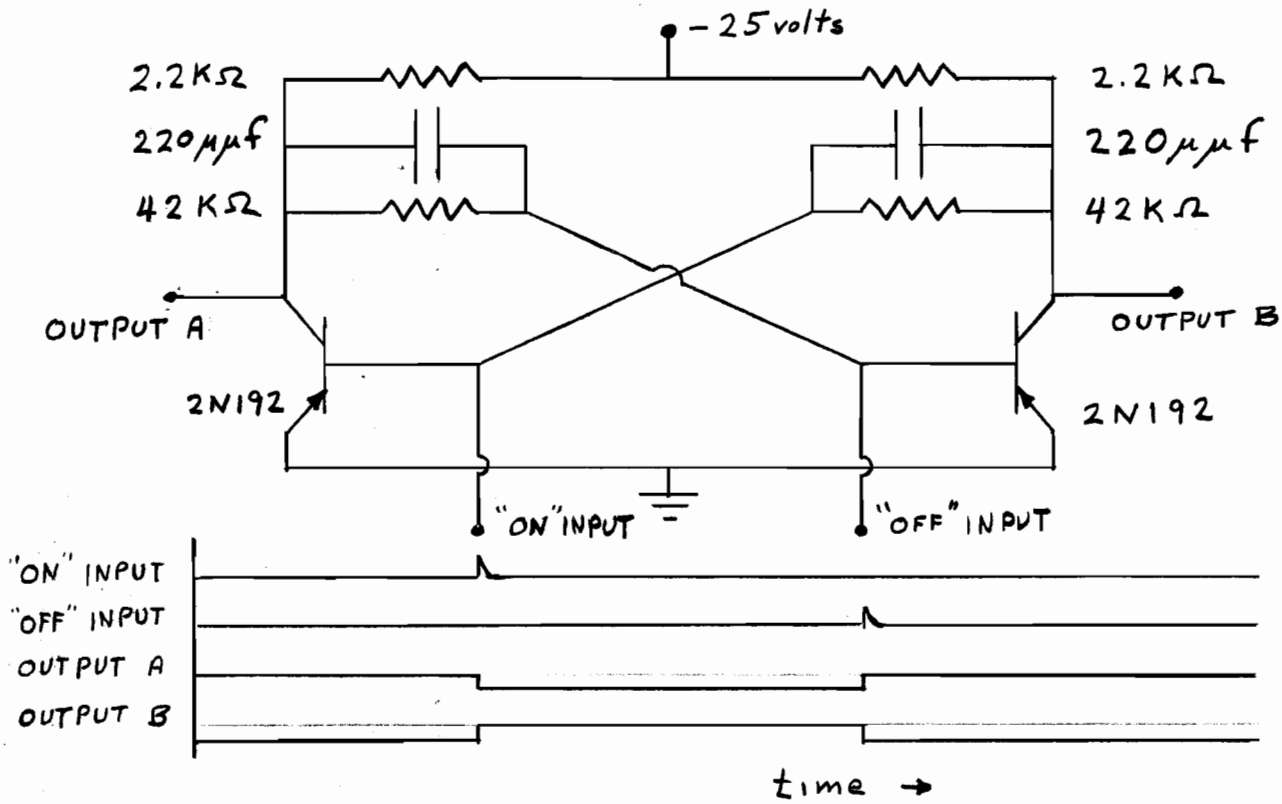

Fig. 2. Bistable Flip-Flop Circuit

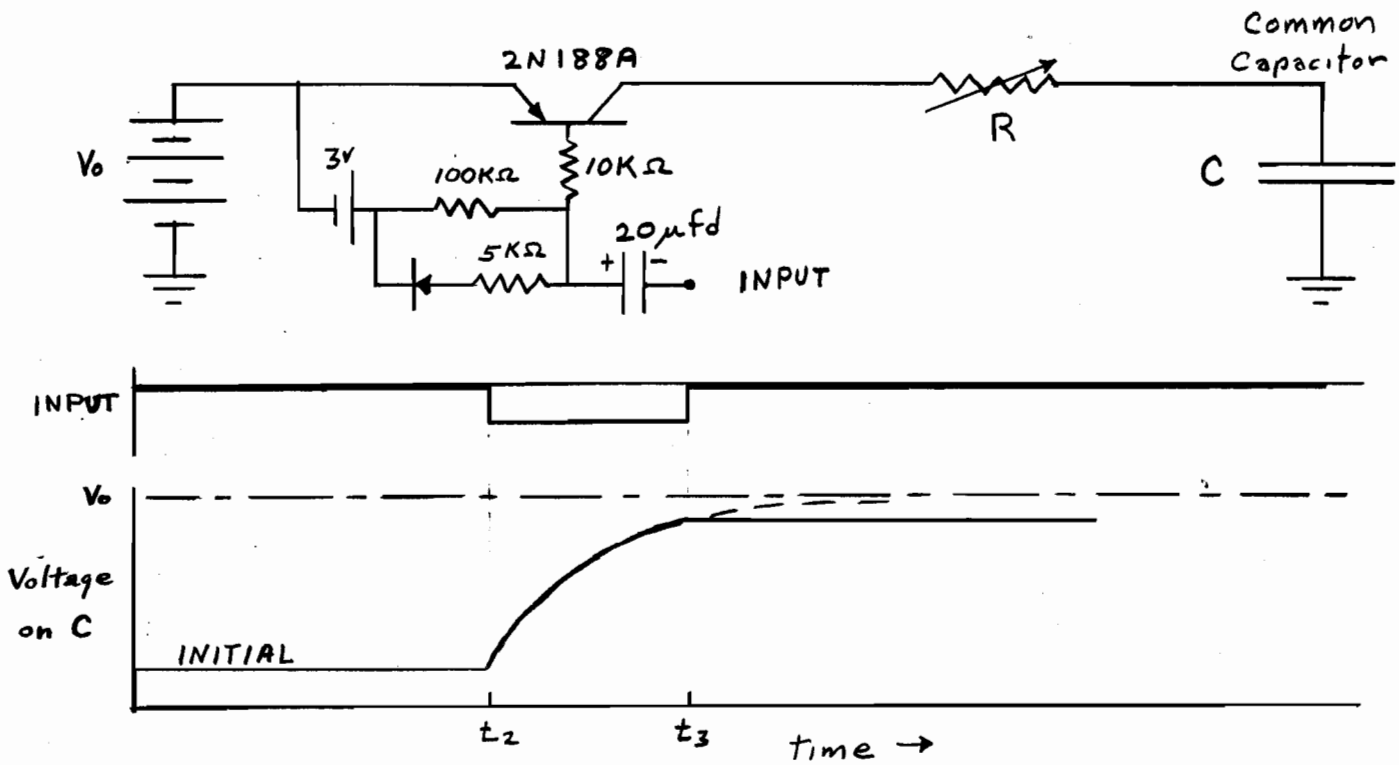

Fig. 3. Typical RC Circuit

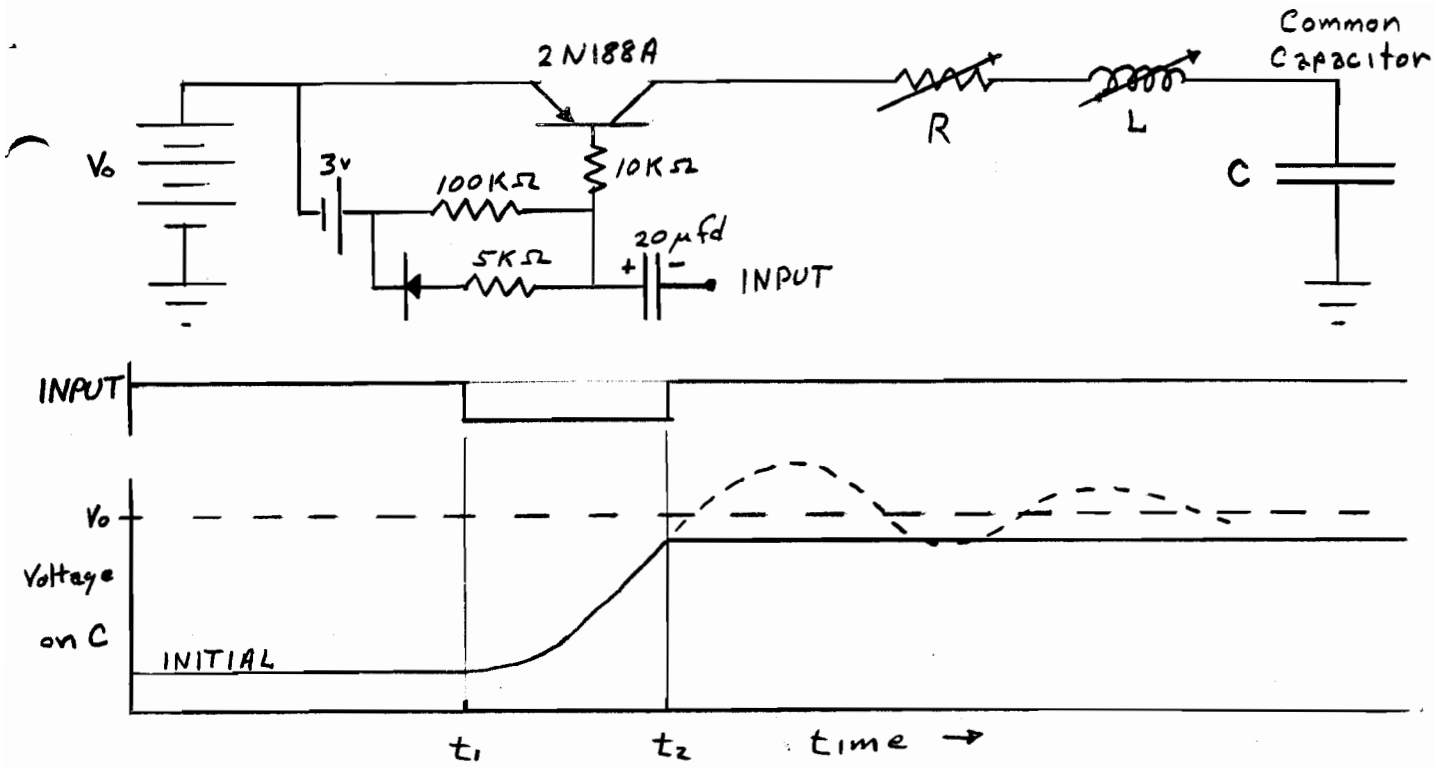

Fig. 4. Typical RLC Circuit

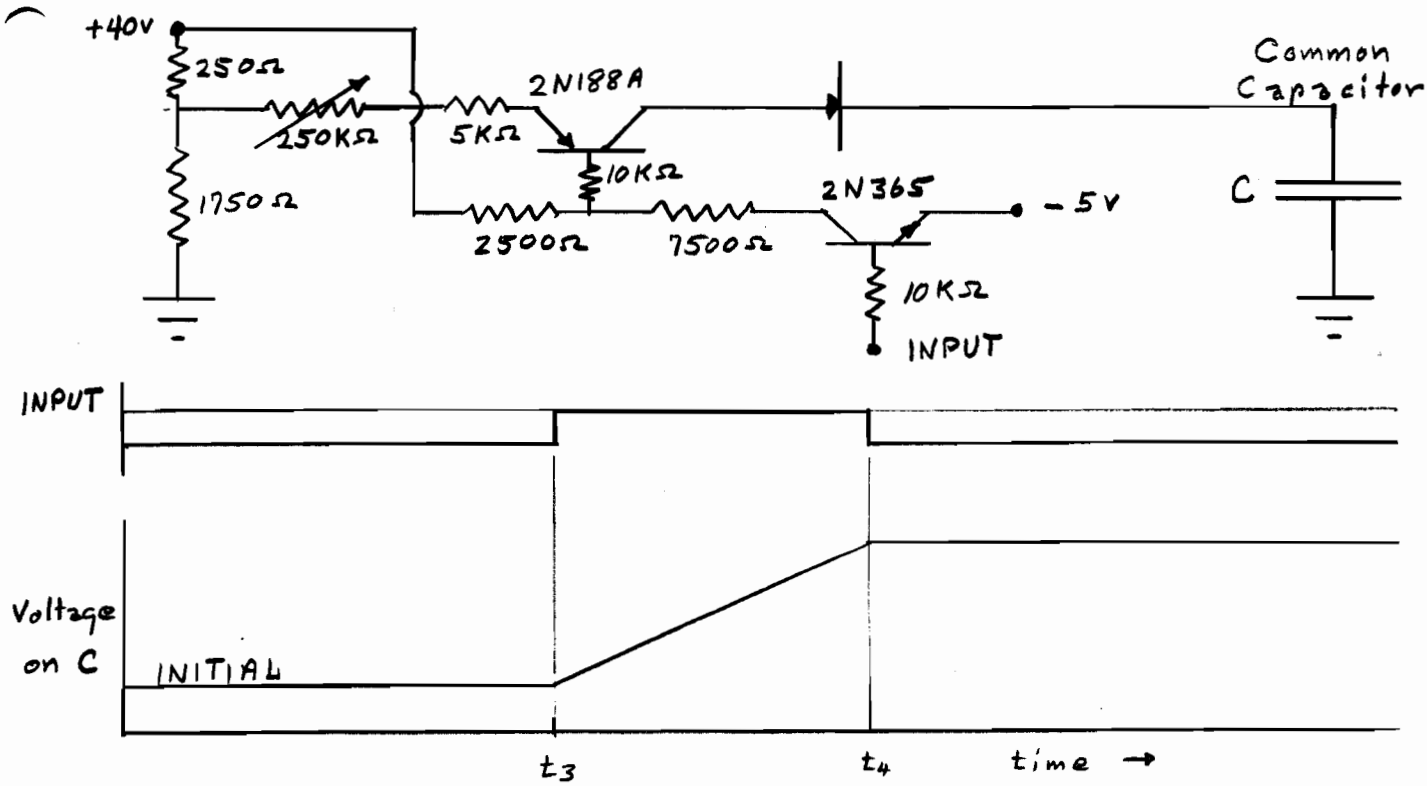

Fig. 5. One Possible Sawtooth Circuit

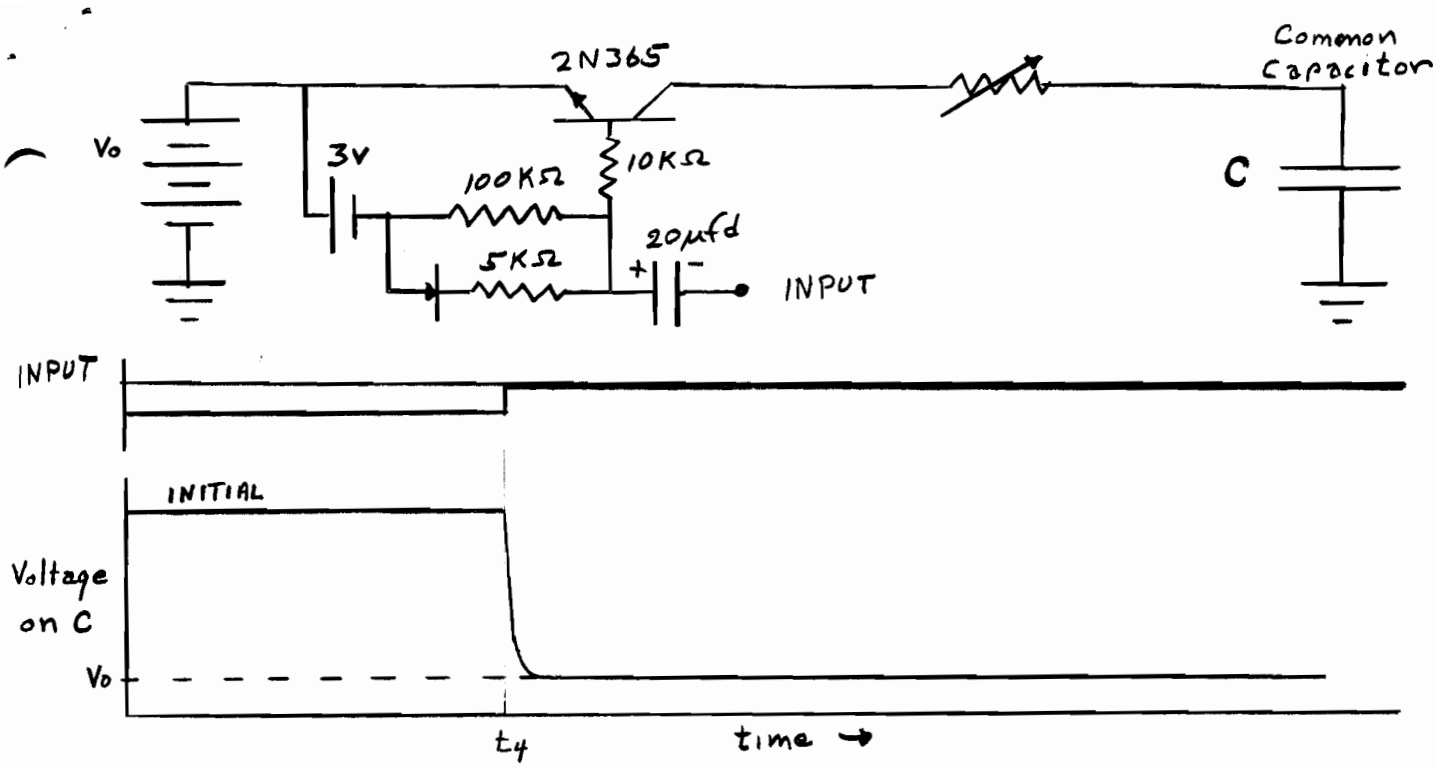

Fig. 6. Typical Discharge Circuit

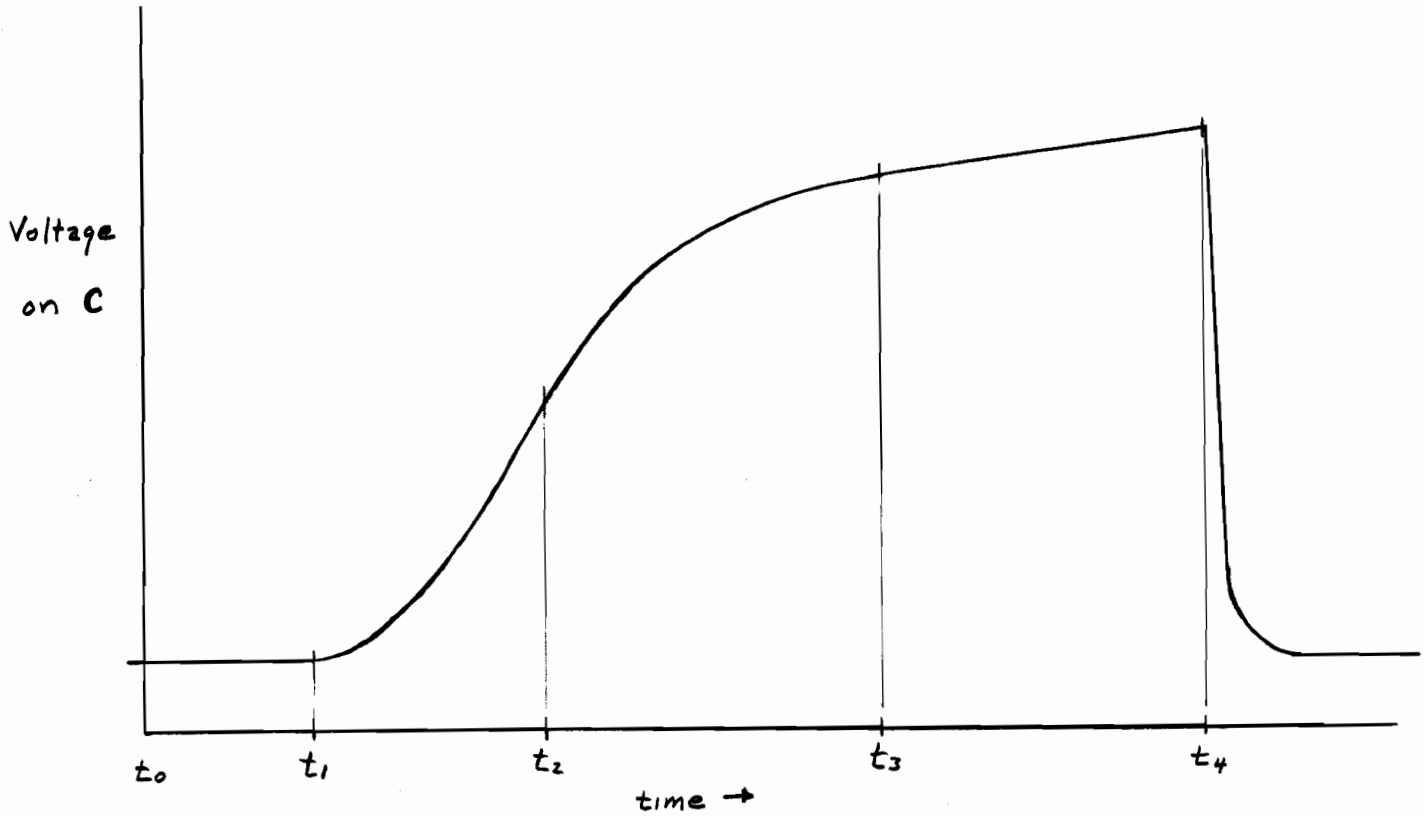

Fig. 7. Voltage Waveform Synthesized from Three Charging Circuits and One Discharge Circuit