Pomona Library
[redacted]
0 1160 0038725 2

416

MIDWESTERN UNIVERSITIES RESEARCH ASSOCIATION

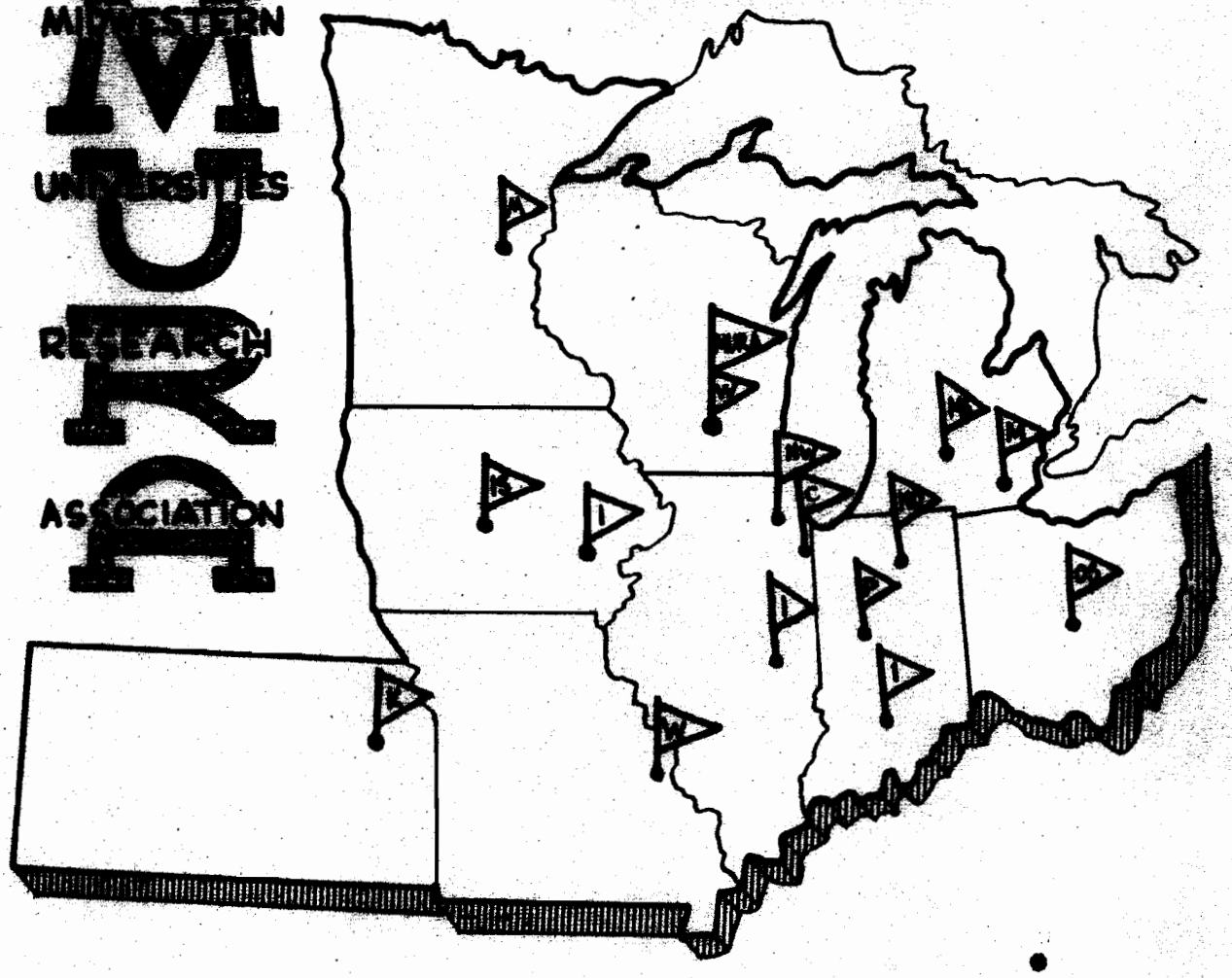

CURRENT STATUS OF THE LUMINESCENT CHAMBER

Lawrence W. Jones

REPORT NUMBER 416

MIDWESTERN UNIVERSITIES RESEARCH ASSOCIATION*

2203 University Avenue, Madison, Wisconsin

CURRENT STATUS OF THE LUMINESCENT CHAMBER

Lawrence W. Jones**

July 31, 1958

ABSTRACT

The nature of the luminescent chamber as a tool in high energy physics research is discussed and problems and their solution in constructing such a chamber are outlined. Characteristics of solid and filament scintillators, photographic film, and available image intensifier tubes are presented. Particular attention is given to regenerative light amplification, and its application to track viewing. Image tubes under development and other possible systems are outlined. It is concluded that the luminescent chamber should soon become a practical, useful instrument.

*AEC Research and Development Report. Research supported by the Atomic Energy Commission, Contract No. AEC AT(11-1) 384.

**Summer participant at MURA from the University of Michigan.

I. INTRODUCTION

The luminescent chamber[1] shows promise of becoming a tool of wide versatility and importance in high energy physics. At this time, however, its problems and possibilities are just beginning to be explored, and some physicists not active in this development have expressed interest in its current status. The purpose of the discussion below is to summarize the background of some of these ideas, the status of current developments, and the prospects for the future. Inevitably a disproportionate share of attention will be devoted to the author's own program.

The idea behind the luminescent chamber is simply to record the image of particle tracks passing through scintillating crystals. In its most elemental form, the luminescent chamber was first used by Geiger almost 40 years ago when he viewed alpha-particle tracks in zinc sulphide through a microscope. Unfortunately the light produced by a minimum ionizing particle passing through any known scintillator is too faint to photograph in any situation that would be experimentally useful, so that an essential element of a luminescent chamber system is one or more image intensifying electron tubes. Such a tube in its simplest form consists of a photocathode (of cesium antimony for instance), an accelerating potential of from two to thirty kilovolts, and a fluorescent screen (of zinc sulfide for instance). Either electrostatic or magnetic focusing may be used. The first image tubes were made in the early 1930's, although the first extensive application of such tubes was in the infra-red viewing Snooperscope during the war.[2] Since that time, single-stage image tubes have been applied to x-ray fluoroscopy,[3] fast-shutter photography,[4] and astronomy.[5]

In general, a luminescent chamber system can be represented schematically as a sequence of components as in Fig. 1. The last two components may be incorporated into an automatic system one day, however at present development is centered on the rest of the system. Only the first four components will be discussed here.

While the term "luminescent chamber" is used here (following Zavoiskii), the terms scintillation chamber, filament chamber, STICER (scintillation tract imaging counter) are also in use.

The virtues of the luminescent chamber in high energy particle physics are its time resolution (limited only by the decay times of scintillators and transit times of particles through scintillators), lack of dead time (limited only by the time required to advance film), and the fact that an image tube can be gated so that pictures only of desired events may be recorded. This preselection might be accomplished by time of flight or other counter arrangements, and the image stored on an intermediate phosphor in the image tube chain until electronic selection can be completed. The chief disadvantages are the inherent lack of spatial resolution (1/4 to 2 mm) and the fact that, to date, no one knows how to make a pure hydrogen scintillator.

Zavoiskii and his collaborators have clearly demonstrated the feasibility of the luminescent chamber.[1] Those closest to the field are certain it is only a matter of time before it becomes a widely-used tool in high energy physics.

II. SCINTILLATORS

The two most important characteristics of a scintillator from the standpoint of the luminescent chamber are its absolute scintillation efficiency (fraction of the

particle energy lost in the material appearing as light to which a photocathode is sensitive) and the efficiency as measured in terms of the light produced per unit length of minimum ionizing track in the material (the absolute efficiency time the density except for small factors). Table I gives relevant information on several scintillators.

The most attractive material for large, single crystal luminescent chambers is unactivated cesium iodide cooled to liquid nitrogen temperatures. Unfortunately there is relatively little information available on this material in the literature,[6] and from this it appears that the scintillating efficiency depends strongly on the method of preparation (e.g., whether from liquid solution or the melt) and on trace impurities. Also, the price is high: $6.25 per cubic centimeter (from the Harshaw Chemical Company).

In using a solid scintillator, a compromise is necessary between the depth of field for a given track resolution and the number of light quanta that may be recorded per unit length of track. Thus, from Fig. 2, the solid angle subtended by the lens is given by

$$\Omega = \frac{a^2}{4(d/2)^2} = \frac{a^2}{d^2} .$$

If the lens images the track onto a cathode of efficiency E and if N quanta per centimeter (of minimum ionizing track) are produced in the crystal, the number of photoelectrons produced in the image tube, n, per centimeter of track in the crystal is given by

$$n = NE \frac{a^2}{d^2} .$$

Correspondingly,

$$d = a\sqrt{\frac{NE}{n}} \quad .$$

If the focal plane of the lens is centered in the crystal, then a track passing close to the front or back surfaces of the crystal will give rise to photoelectrons in the image tube whose point of origin in the crystal is uncertain within a circle of radius a. Thus a may be considered the track resolution.

Table II indicates the depth of field, d, for several scintillators using the efficiencies of Table I and the above expressions. Of course, a scintillator of thickness 2 d can always be viewed by an image tube on either side, each focused on a plane one-quarter of the way through the crystal. Since one would generally require stereoscopic viewing, four image tube-camera systems would be required. It is possible that by using a greater number of systems, each focused at a different depth in the crystal, an even greater depth of total field could be observed. The transverse dimensions can be rather large, since the optics focusing the crystal image onto an image tube photocathode can demagnify. Thus if a crystal is used with an a of 1 mm and the image tube system has a resolution of better than 0.1 mm, a 10-to-1 image reduction could be used without loss of resolution. Since five inch diameter cathodes are common in image tubes, a scintillator 50 inches in diameter could in principle be used. Thus from Table II and the above discussion, it is conceivable that a single cooled cesium iodide crystal 30 cm thick and 120 cm in diameter could be viewed by four 5 inch diameter image tubes (a stereo-pair on each side) with one mm resolution. This is a volume of 0.34 m^3, a weight of 1500 kilograms, and would cost over $2,000,000.

As an alternative to solid scintillators, it has been suggested[8] that thin plastic scintillator filaments be arranged in a light-pipe bundle. In this case the light is channeled down individual filaments by total internal reflection and a large depth of field can be obtained while maintaining a resolution equal to the filament diameter. For stereo viewing, layers of fibers may be stacked with the fibers of successive layers at right angles to each other. Filaments are available commercially (e.g., from Pilot Chemicals, Inc.) in diameters of from 1/4 mm to 2 mm. Attenuation measurements have been made on them which indicate attenuation half lengths of 5.7 inches (average). From Reynold's calculations and measurements, one may conservatively expect 120 light quanta (on the average) to reach one end of a 1 mm filament of plastic scintillator traversed by a minimum ionizing particle. Thus with a 10% efficient image tube cathode and reasonable optical coupling between the filaments and cathode, several photoelectrons from each filament through which a particle passes may be expected. While filaments of cesium iodide and continuous luminescent chambers of organic scintillators have been discussed, it appears at present that plastic filaments and crystalline alkali halide scintillators will be the most generally useful chamber media. Since the light collection efficiency from the filaments must be high, the image tube photocathode area must be of approximately the same diameter as the scintillator bundle; in the case of light-pipe window coupling (see below) the same diameter.

Methods of increasing the light output of a scintillator have hardly been explored, and new developments in this line could greatly increase the utility and flexibility of luminescent chambers. For example, certain phosphors as well as Xenon exhibit photo-electro luminescence: i.e., an electric field across a material is used to enhance its light output from ionizing events.[9]

III. FILM

The preceding discussion of scintillators has assumed the necessity of an image tube. The best available films (Royal X Pan, Tri-X, and Polaroid, all with A. S. A. speeds of several hundred) require 10^8 photons (of blue light) per square centimeter for a film darkening discernible above background fog (a developed density ratio of .1 to .2). This has been verified by quantitative measurements at Michigan, Westinghouse, and Princeton as well as from information supplied by the manufacturers. Land (of Polaroid) alludes to more sensitive film by an order of magnitude. For the above figure and from Table I, it is clear that there is not enough light produced in any scintillator to photograph a track directly, hence an intermediate light amplifying device is necessary. The final resolution of an image tube light amplifying system will correspond to a spot size of 10^{-4} to 10^{-3} square centimeters, so that the gain required in an image tube is at least 10^4 or 10^5. The gain of an image tube, that is, the ratio of light quanta out to light quanta in, includes the efficiency of the first photocathode (typically 10%); therefore a tube with a gain of 10^4 may be expected to produce 10^5 quanta at the output for each photoelectron from the photocathode. However, only a fraction of the light from the image tube will reach the film (depending on the collecting optics, 10% to 30%), and in addition long-lived phosphorescence and dark current in the image tube may be expected to result in some fogging of the film. Therefore an overall image tube system gain of from 10^5 to 10^6 has been sought to be able to photograph single photoelectrons.

Measurements at Westinghouse with oscilloscope tubes indicate that 3000 electrons accelerated through 10 kilovolts onto a P-11 phosphor with reasonable

resolution may be photographedwith Royal X Pan or Tri-X film. Thus an electron mulitplication of this order or greater is required in an image tube system.

It has been ascertained that conventional image orthicons are not as sensitive (by more than an order of magnitude) as film.

IV. AVAILABLE IMAGE TUBES

"Available" means that these tubes have been made and can be made again, however in no case are these on-the-shelf items (such as an 807); each order is followed by a one to four months' delivery time. Image tube manufacturers concede that only one of two or more image tube starts results in a finished tube of the desired characteristics.

With this preamble, Table III lists the available image tubes and their characteristics insofar as they are known .

The gain, A, of a single stage image tube should be simply

$$A = E e \frac{V}{W}$$

where E is the photocathode efficiency, e is the phosphor efficiency, V is the tube voltage, and W is the average energy of the light quanta from the phosphor in electron volts. Thus for E = 0.10, e = 0.10, V = 10,000, and W = 2.8 (blue light), a gain of 36 should be observed.[10]

The most critical element of the image tube is the photocathode. The usual cesium antimony cathode must be evaporated under very clean and carefully controlled conditions. A good cesium antimony surface with an S-11 response (peak sensitivity at about 4400 Å) is about 10% efficient in converting 4400 Å quanta to electrons. This corresponds to a sensitivity specified as 60 microamperes per lumen (from a tungsten source). Multialkali

cathodes have been made with 170 microamperes per lumen sensitivity, and although much of this gain is in the longer wavelengths, RCA claims that they are about twice as sensitive as cesium antimony for blue light.

The best available image tube phosphor is P-11 (Zn S: Ag) since its efficiency is the highest of any whose spectrum peaks within the maximum sensitivity range of both film and S-11 photocahtodes. The efficiency of the phosphor is reported to be about 15% at 10 kilovolts increasing to 25% at 30 kilovolts. Most of this light can be brought out by aluminizing the back of the phosphor. The disadvantage of P-11 is that its decay time is long (100 to 200 microseconds). Other phosphors such as P-5, P-15, and P-16 have short decay time with less sensitivity. The best of these, P-16, is less sensitive by a factor of 4 than P-11, but has a decay time of less than a microsecond.

A limitation in the usefulness of an image tube could be its dark current. A cesium antimony cathode at room temperature produces 10^3 to 10^4 thermal photoelectrons per square centimeter per second. If the image tube is gated on for 100 microseconds, the one or less photoelectron per square centimeter would not easily be confused with a track. Moderate cooling greatly reduces the dark current, therefore it seems unlikely that this will be a source of annoyance except in poor tubes. The dark current is reportedly less by a factor of 100 or more for certain multi-alkali cathodes. Other problems in poor image tubes are background light from field emission electrons from the electrode structure and from ion bombardment of the cathode in gassy tubes. Since the cathode sensitization results in a lot of cesium coating of the tube, this is a particularly troublesome problem.

Due to the transverse velocities of photoelectrons, some first order focusing in image tubes is required. In electrostatically focused tubes, the cathode is almost always a spherical surface, while the phosphor anode may be a plane or spherical surface without loss of resolution (since the image plane of the electron optics has a great depth of field). Magnetically focused image tubes have plane cathode and anode surfaces. There is a strong tendency on the part of image tube manufacturers to favor electrostatically focused tubes, since (a) they do not require a magnetic field and a regulated current supply, (b) only a voltage ratio (between successive electrodes, by means of a resistor divider) need be maintained for good resolution, and (c) the electron trajectories all pass through a small area so that the cathode and phosphor halves of the tube can be more effectively isolated.

The resolution of image tubes is in many cases limited by the grain size of the phosphor. Some laboratories are experimenting with transparent phosphors, and these show promise of improving the overall image tube resolution.

V. OPTICS

Geometrical optical components are necessary to couple the light from scintillators to image tubes, between image tubes, and from image tubes to the recording devices (film). In almost every instance high light collection efficiency is important or necessary.

In discussing optics it is convenient to define certain terms. Image tube phosphors are Lambertian surfaces, i.e., the emitted light intensity is proportional to the cosine of the angle, α, between the viewing direction and a normal

to the surface. Normalized to the total light from the surface (integrated over 2π), the fraction of light collected by an axially symmetric lens is $\sin^2\alpha$, where α is the angle subtended by the lens aperture. The f number of a lens is given by

$$f = \frac{1}{2\tan\alpha}$$

If the lens transmits a fraction, τ, of the light falling on it, the efficiency, E, is given by

$$E = \tau \sin^2\alpha = \frac{\tau \cos^2\alpha}{4f^2}$$

The reciprocal of E is sometimes referred to as the "camera factor" C. is less than unity due to reflection losses on glass surfaces (which can be made quite small by coating) and by vignetting from parts of the lens and image tube structures. Values of f and E are listed for typical α's in Table IV.

A. Lenses

Refractive lenses using several components with spherical surfaces can be made with f values as low as 0.7 with focal lengths up to 110 mm and field areas up to 40 mm. The Old Delft Optical Company of Delft, Holland, lists several different sizes of these lenses. An f/.75, 110 mm focal length, 1 inch field of view lens is made by Eastman Kodak for x-ray cine-fluoroscopy.[11] This lens contains seven coated elements. We have measured a 24% efficiency for this lens corresponding to a τ of almost 0.8.

B. Spherical Mirror Optics

Large aperture Schmidt optics have become available as a result of developments for projection television. Smaller Schmidt systems may also be found on

the market from wartime snooperscope systems. Since a Schmidt corrector plate must be a specially ground aspheric surface, it is very expensive. The mass produced systems usually contain a molded plastic corrector and have poorer resolution. Apertures of Schmidt systems range from f/.65 to f/.9.

A more recent development by Bouwers[12] replaces the Schmidt corrector plate with a meniscus lens to correct the aberrations of a spherical mirror. Such a meniscus corrector is simpler to fabricate than a Schmidt plate since it is made from spherical surfaces. Such a system may also have a greater field of view than a Schmidt system for a given resolution. The most highly corrected large aperture mirror systems employ both meniscus and Schmidt correctors. Meniscus corrector systems are available from the Old Delft Optical Company of which Bouwers is president.

Spherical mirror optics have a spherical image surface and invariably have some vignetting of the aperture. Refractive (lens) optics have plane image surfaces.

C. Fiber Optics

Glass fibers down to .001 inch diameter coated with a glass of lower index of refraction can be collected in a bundle and used to transmit light in an image preserving manner from point to point.[13] The transmission corresponds to an f number for the total internal reflection angle and a γ determined by surface losses and packing factor. If such glass fiber bundles can be incorporated into the face plates of image tubes they will be ideal for coupling filament scintillators to photocathodes, however it is difficult to fabricate vacuum tight light-pipe windows in large diameters which can be baked out at the high temperatures necessary in the image tube fabrication process. Glass fiber windows on phosphor and cathode ends

of single stage image tubes would allow them to be cascaded simply by placing them in optical contact instead of coupling by large aperture lenses. At present it appears that lens and mirror optics might provide cheaper coupling, and they are currently available.

VI. CASCADE SYSTEMS

With available components, it should be possible to cascade image tubes with large aperture optics to the point where single photoelectrons from the first tube may be photographed. This is being pursued by Reynolds at Princeton, Roberts at Rochester, Chinowsky at Brookhaven, and others.

Three two-stage RCA tubes #C-73458 each of gain A = 300 coupled by optics of C = 5.5 should have an overall gain of A^3/C^2 or 9×10^5. With a single stage tube of a gain of 30 in place of the first two-stage tube, an overall gain of 9×10^4 would still be achieve. If this first were a "minifier" (e.g., a Westinghouse or DuMont five inch cathode - one inch anode), the brightness of the final image of one filament would be enhanced by the square of the linear demagnification (25 in this case). This factor is of course of no importance in the threshold case of viewing individual photons, but it is relevant in the fiber scintillator case where several photoelectrons will arise from one filament.

RCA is developing a three-stage image tube and DuMont a two-stage tube with a five inch cathode in the first stage. These two tubes together, coupled by efficient optics, should enable photography of single photoelectrons. In this case and in general it is convenient to think of the two tubes here performing separated functions of gating and amplifying. Thus the two-stage DuMont tube will be made

with a P-16 phosphor on the first (internal) anode and a grid to gate the second stage. The light from the scintillator may then be "stored" on the one microsecond phosphor and auxiliary electronics could then pulse the grid of the second stage if the event is of interest. The remaining phosphors are all slow (P-11, 100 - 200 microseconds) but more efficient. The second three-stage tube would amplify the light to a level where it could be photographed.

While few tubes have gating grids incorporated in them, it has been found that others can be readily gated by biasing the photocathode positive about a kilovolt. It is also not difficult electronically to gate the entire tube voltage (to about 50 kv).

VII. REGENERATIVE SYSTEMS

An attractive alternative to cascaded image tubes for light amplification is the use of regenerative amplification using one image tube together with feedback optics. This arrangement, suggested by Kalibjian,[14] has been experimentally demonstrated at Michigan.[15] A well-designed regenerative system could be used in place of the second, three-stage RCA tube in the system described above. It could also be used as the single element between an inorganic scintillator and a camera. Since any regenerative system must be pulsed, it would be most useful with a scintillator with a time constant longer than the gating electronics delay or when preceded by another image tube (with a phosphor with a decay time of order a microsecond or longer). Since filament scintillators must be in optical contact (e.g., fiber optics) with a photocathode or at least light from them focused with large aperture optics onto the tube cathode, it is not simple to design a regenerative

system for the first stage of light amplification in a fiber scintillator chamber.

The light amplification of a regenerative system can be derived in terms of the image tube amplification, A, the loop gain of the system G (A times the optical feedback efficiency) and the gating time of the image tube t_1 where time is measured in units of the characteristic decay time constant of the image tube phosphor. (Many phosphors have a complex light decay which is not accurately represented by a single exponential, however the general behavior of the solutions should be as below.) If light L_o falls on the image tube cathode at the time $t = 0$ when the image tube is gated on, the rate at which light is produced from the phosphor is

$$\frac{dL_1}{dt} = A L_o e^{-t}$$

and $$L_1 = A L_o$$

While the tube is gated on, L_1 serves as a source of light for the next image L_2, so that

$$\left.\frac{dL_2}{dt}\right)_{t=t'} = A L_o G \int_0^{t'} e^{-t} e^{-(t'-t)} dt = A L_o G t' e^{-t'} \quad (t' < t_1)$$

and

$$\int_0^{t_1} \frac{dL_2}{dt} dt = L_2^{(t_1)} = A L_o G \left[1 - e^{-t_1}(1+t_1)\right].$$

Since

$$\int_{t_1}^{\infty} \frac{dL_2}{dt} dt = A L_o G t_1 e^{-t_1},$$

$$L_2 = \int_0^{t_1} \frac{dL_2}{dt} dt + \int_{t_1}^{\infty} \frac{dL_2}{dt} dt = A L_o G \left[1 - e^{-t_1}\right].$$

Similarly, L_2 serves as a source for L_3, and L_3 for L_4. By successive integrations, any L_n may be found. In general,

$$L_m = A L_0 G^{(m-1)} \left[1 - e^{-t_1} \left(1 + t_1 + \frac{t_1^2}{2!} + \frac{t_1^3}{3!} + \cdots \frac{t_1^{(m-2)}}{(m-2)!} \right) \right].$$

It may be noted that

$$\frac{L_m}{L_{m+1}} \simeq \frac{m}{G t_1}, \quad \text{for} \quad G \gg 1, \ \frac{m}{t_1} \gg 1 .$$

If the images are registered, i.e., successive images of point sources are closer than the area of each image, the relevant quantities are

$$\frac{dL}{dt} = \sum_{m=1}^{\infty} \frac{dL_m}{dt} \begin{cases} = A L_0 \, e^{(G-1)t} & (t < t_1) \\ = A L_0 \, e^{(G-1)t_1} \, e^{-(t-t_1)} & (t > t_1) \end{cases}$$

and

$$L = \sum_{m=1}^{\infty} L_m = \frac{A L_0 G}{G-1} \left[e^{(G-1)t_1} - \frac{1}{G} \right].$$

Table V indicates the values of L_n and L for two cases of interest corresponding to a two-stage RCA tube and a one-stage DuMont tube in regenerative geometries. It is apparent that the brightest image is only 10% (or less) brighter than the preceding and succeeding images, and that only about 10% of the total light is in the brightest image. Also, for finite gate times, the number of regeneration cycles, n, to reach a given brightness is considerably greater than would be required assuming simply $L_n = L_0 A G^n$. Similar conclusions have been reached independently by A. Roberts.[16]

Clearly successive images should be in registry if possible. If they are not, because of image tube distortion or other reasons, a point object will appear on

regeneration as a series of dots, with a few of these dots almost equally bright. This would confuse the reading of a particle track or a complex nuclear event considerably. Since in some cases more than ten regenerative cycles are required to reach an image of sufficient intensity, any distortion is magnified by this factor. Thus it would be possible that outside a certain radius on the image tube, images would magnify themselves out of the field of view before they were bright enough, while inside, they would demagnify until they became an unresolved brightness near the optic axis. Another problem arises since, strictly speaking, the spot brightness is the light per unit area. The image of a point is a small area determined by the tube resolution. On each regeneration, the area increases, so that the brightness is proportional to L_n/n. If a very great number of regenerations are required, the resolution will consequently be reduced significantly.

If an image tube resolves 10 lines per millimeter and the regenerated images are spaced 0.1 mm, the image of a point (one photoelectron) will appear on regeneration as a streak less than a millimeter long with a brightness tapering off at either end and an easily measured center no more than one and one-half mm from the original image. Thus the first and second problems above are tractable in this case. The linear breadth of the streak will be 0.3 or 0.4 mm at its brightest point so that the overall resolution of the system with a one inch output phosphor may be only 100 lines instead of 300 - 400 lines. For a one inch diameter phosphor, this corresponds to an overall distortion of 1% on the outside of the field.

In the case where a two-stage tube is used in a regenerative system, the problem of small differential brightness of successive, unregistered images may be overcome by alternately gating the two halves of the tube. If the gate length is

equal to the phosphor decay time, the loop gain is reduced by e^2, but successive images also differ in brightness by at least e^2. The brightness of the last image is now given by $L_o AG^n$ where G is smaller than before, however for a given brightness n is also smaller by a factor of two. Thus a completely unregistered system is practical using a two-stage tube. This system was suggested and analyzed by M. Perl.

Figs. 3 through 6 indicate possible regeneration geometries using available image tubes and optics. The axially symmetric geometry (Fig. 3) has been designed either for the two-stage RCA tube or the one-stage DuMont tube by the Old Delft Optical Company. The system using a minifier (Fig. 4) is similar to the one with which regeneration was originally studied, however the second lens can be small and of long focal length by introducing a field lens. Westinghouse, DuMont, or RCA minifier tubes could be used here.

In systems using one-stage electrostatically focused image tubes, the electron optics inverts the image. If two optical inversions are used, an additional inversion should be introduced to prevent each image from being accompanied by a less bright mirror image. This may be done simply with prisms or mirrors as in prism binoculars. The two-tube system (Fig. 5) has the advantage that the second tube could be gated on after an event occurs in a crystal while the first tube stores the image. The systems using refractive optics with curved photocathodes must compromise between the plane image surface of the optics and the curved photocathode. This is less serious in the case of minifiers since light converges on the cathode in a cone with an angle 1/M times that with which it left the phosphor where M is the demagnification. This results in a small circle of

confusion, which is further reduced by M in the tube demagnification, so that in this sense such effects are reduced by M^2. Field curvature can be reduced by placing a plano-concave or double-concave spherical lens in optical contact with the photocathode end window, although this can introduce some barrel distortion.

Other possible regenerative systems are sketched in Figs. 7 and 8. The system of Fig. 7 was suggested by C. H. Jones of Westinghouse. The channeled regenerative system was discussed some time ago by groups at Farnsworth and Westinghouse and has been recently analyzed by A. Roberts.[17] One might also conceive of an avalanche regenerator or multipactor regenerator in which parallel photocathodes and aluminized phosphors are placed in a strong magnetic field. By proper choice of materials it might be possible to have regeneration with an applied pulsed D.C. potential by an electron-ion-electron cascade without poisoning the cathode. With applied rf a controlled multipactor regeneration might be used. If sufficiently strong (pulsed) field gradients could be maintained, an electron avalanche might be made to occur in an image preserving way by having a proportional counter gas between anode and cathode, again with a uniform magnetic field to preserve resolution.

VIII. OTHER SYSTEMS

Westinghouse is developing an image preserving electron multiplier using transmission secondary electron emission.[18] Thin foils of KCl-backed aluminum in a uniform magnetic field exhibit transmission secondary emission gains of five or more, and successful multi-stage electron multipliers have been constructed.

Channeled electron multipliers (Fig. 9) are being developed by the Chicago Midway Laboratories[19] and by Farnsworth. Fine mesh (in principle up to 300 mesh) dynode screens of photoform glass or electroform metal stacked in registry would produce a compact, rigid structure with potentially a large cathode area. Photocathode efficiency would be reduced because of the fraction of projected area useful in initiating electron cascades. An alternative channeled system has been proposed by Bendix in which the channels consist simply of high resistivity tubes with a voltage gradient along them. Secondary electrons continue to strike the walls of the tubes due to their transverse momentum and hence cascade down the channels.

One- and two-stage image tubes have been incorporated into special image orthicon tubes by RCA. Eventually such systems may be the most useful last stage of an image tube chain as the relevant information is immediately available electronically for computer analysis. Hough[20] has already adapted an image orthicon to the problem of automatic track counting in nuclear emulsions with its attendant problems of correlations and noise rejection, and it may be hoped that an extension of this type of system may largely eliminate the time consuming film reading phase of certain nuclear experiments.

As another extreme, one might consider a gas scintillation chamber consisting simply of parallel plate electrodes, one containing a phosphor, with the space between occupied by a proportional counter-type gas. An ionizing particle would leave a track of ion pairs. A pulsed, very high voltage (50 - 400 kv, for example) would initiate an electron cascade, and these same electrons would excite the phosphor, possibly to a brightness sufficient for direct photography. A magnetic field again might be necessary to maintain resolution. While stereo pictures would not be possible here, the brightness

of each spot would be correlated with the track position in a direction parallel to the electric field. This device would have some features of a diffusion cloud chamber, however with the time resolution of a scintillation chamber.

IX. CONCLUSIONS

Experimentally useful luminescent chambers should be operating next year. With its unique characteristics and wide range of variation, the luminescent chamber will be a useful addition to the stable of available detection tools. Its time resolution may make it essential in certain experimental situations (e.g., colliding beams experiments), although the spacial resolution may never be as good as that in emulsions or bubble chambers. By the detailed discussion above of each component, it is hoped that the reader may more realistically appraise the problems and potentialities of this new tool.

Much of the material included here was gleaned from discussions and internal memoranda among the members of the ad hoc image intensifier committee. Image tube information came largely from RCA (Lancaster), DuMont, and Westinghouse; and information on relfection optics from the Old Delft Optical Company.

1. E. K. Zavoiskii et al., Doklady Akad. Nauk. SSSR 100, 241 (1955).
E. K. Zavoiskii et al., Journal of Nuclear Energy 4, 340 (1957).

2. G. A. Morton, J. E. Ruedy, G. L. Krieger, RCA Rev. 9, No. 3, 419 (1948).
Morton and Flory, RCA Rev. 7, No. 3, 385 (1946).

3. J. W. Coltman, Radiology 51, 359 (1948).

4. Gibson, Bowser, Ramaley and Scott, Rev. Sci. Inst. 25, 173 (1954).
J. S. Courtney-Pratt, Research 2, 287 (1949).

5. A. Lallemand and M. Duchesne, Comptes Rendus 233, 305 (1951).
A. Lallemand and M. Duchesne, Comptes Rendus 238, 335 (1954).
A. Lallemand, Trans. Inst. Astron. Union 9, 673 (1957).

6. Hahn and Rossel, Helv. Phys. Acta 26, 271, 803 (1953).
B. Hahn, Phys. Rev. 91, 772 (1953).
Knopfel, Loepfe and Stoll, Helv. Phys. Acta 30, 521 (1957).

7. J. Birks, "Scintillation Counters," McGraw-Hill (1953).

8. G. T. Reynolds, P. E. Condon, Rev. Sci. Inst. 28, 1098 (1957).
G. T. Reynolds, Nucleonics 16, No. 6, 60 (1958).

9. D. I. Meyer, Bull. Am. Phys. Soc. 2, 306 (1957).

10. B. R. Linden and P. A. Snell, Proc. Inst. Radio Engrs. 45, 513 (1957).

11. W. E. Schade, Journal of the SMPTE 59, 307 (1952).

12. A. Bouwers, "Achievements in Optics," Elsevier, Amsterdam and New York (1946).

13. N. S. Kapony, J. Opt. Soc. Am. 47, 413 (1957).

14. R. Kalibjian, UCRL 4732 (1956) (unpublished).

15. L. W. Jones and M. L. Perl, Rev. Sci. Inst. 29, 441 (1958).

16. A. Roberts, "Kinematics of Photon Multiplication in Cascaded and Regenerative Photocathode-Phosphor Image Intensifier Tubes." (unpublished).

17. A. Roberts, "On the Possibility of Regenerative Channeled Image Intensifiers," Internal Report 58-6 April 1, 1958 (unpublished).

18. E. J. Sternglass and M. M. Wachtel, Phys. Rev. 100, 1238 (A) (1955).

19. Midway Laboratories Proposal to the AEC, 1958 (unpublished).

20. P. V. C. Hough, W. Williams, and R. O. Winder, Bull. Am. Phys. Soc. II, 3, 181 (1958).

TABLE I
CHARACTERISTICS OF SCINTILLATORS

Material	Density (g/cm^3)	Decay Time (Sec.)	Ionization Mev/(g/cm^2) a	Scintillating Efficiency b	Spectral Peak (Angstrons)	Number of Light Quanta per cm of track d	Radiation Length (cm)
Plastic	1.0	$<10^{-8}$	1.9	6%	4600	42,000	
Anthracene	1.0	10^{-8}	1.9	10%	4500	70,000	
Sodium Iodide (Thallium Activated)	3.7	$.5 \times 10^{-6}$	1.3	8%	4100	115,000	
Cesium Iodide (Thallium Activated)	4.5	1.5×10^{-6}	1.3	8%	4500	140,000[e]	1.8
Cesium Iodide (Cooled to 77°K)	4.5	$<10^{-6}$	1.3	59%[c]	4500	1,000,000	1.8
Cadmium Tungstate	7.8	$\sim 10^{-5}$	1.3	8%	5300	340,000	1.0

a. For minimum ionizing singly charged particle

b. Defined as the percentage of energy lost by ionization which appears as light energy

c. Reference 6

d. Reference 7

e. Reference 1

TABLE II[a]

Characteristics of Solid Crystal Luminescent Chambers

Material	N[b]	n	a (cm)	d (cm)
Anthracene	70,000	10	0.05	1.3
		5	0.10	3.7
Plastic	40,000	10	0.05	1.0
		5	0.10	2.8
Sodium Iodide (Thallium Activated)	115,000	10	0.05	1.7
		5	0.10	4.8
Cesium Iodide (Cooled to 77° K)	1,000,000	10	0.05	5.0
		5	0.10	14.2

a assuming $E = 0.10$

b Table I

TABLE III

AVAILABLE IMAGE TUBES

Manufacturer	Tube Type	Cathode Diam. Inches	Cathode Radius of Curvature Inches	Anode[e] Diam. Inches	Demagnification (paraxial)	Voltage[g] (KV)	Quantum Gain	Resolution Center (lines per mm)	Resolution Edge (lines per mm)	Pincushion Distortion
Farnsworth	6839	1 1/4	2.38	1 1/4	1.0	16	15[b]	40	17	9% (edge)
Westinghouse	WL5997 (clear cathode Fluorex)[h]	5	9 1/2	1	5.0	30	40[b]	20	15	5% (edge) 0% to 1 cm radius on anode
DuMont[a]		5	5	5[c]	1.0	10-15	30		i	8%[b]
		5	5	1[d]	5.0	10-15	30	17		small
		2	2	2[c]	1.0	10-15	30		i	8%[b]
RCA	C 73435B	1 3/8		3	.71	15	12	17		10% (edge)
	C 73436[h]	3	4	.5	.155	20	170	8		i
	C 73458[f]	1	2.38	1	.8	20	300-1000	10	2	30%

a. All electrostatically focused tubes available with grids

b. Estimates

c. Also available in magnetically focused designs

d. Available with image deflection electrodes

e. All anodes flat

f. Two-stage tube

g. All tubes can be pulsed at about 50% overvoltage with corresponding gain increase

h. Successfully gated by cathode biasing

i. No information available

TABLE IV

Light Collection Efficiency from a Lambertian Surface versus Angle Subtended by Lens

Angle Subtended α	Corresponding f-number	Fraction of Light Collected, E (assuming no losses: $\tau = 1$)
14°	2.0	0.06
18.4°	1.5	0.10
26.5°	1.0	0.20
30°	0.87	0.25
33.7°	0.75	0.31
45°	0.50	0.50

TAB. V

REGENERATION LIGHT AMPLITUDES: NUMERICAL EXAMPLES

RCA SYSTEM

A = 300
G = 50

Table of L_n/L_o*

n	t_1 = .15	t_1 = .2	t_1 = .25
1	3.00×10^2	3.00×10^2	3.00×10^2
2	2.13×10^3	2.72×10^3	3.32×10^3
.	.	.	.
.	.	.	.
.	.	.	.
6	2.27×10^4	2.17×10^5	.
7	2.90×10^4	3.65×10^5	.
8	→ 3.19×10^4 ←	5.27×10^5	2.44×10^6
9	3.08×10^4	7.54×10^5	3.88×10^6
10	2.64×10^4	→ 7.67×10^5 ←	5.50×10^5
11	.	7.11×10^5	8.17×10^6
12	.	5.98×10^5	→ 8.72×10^6 ←
13	.	.	8.60×10^6
14	.	.	7.88×10^6
		$\sum L_n = 6.6 \times 10^6$	

*This neglects finite time constant of intermediate phosphor, however this is not an important effect.

DUMONT SYSTEM

A = 30
G = 6

Table of L_n/L_o

n	t_1 = 2	t_1 = 3
10	7.18×10^4	
11	8.48×10^4	
12	→ 9.15×10^4 ←	
13	8.91×10^4	
14	8.13×10^4	
.	.	.
.	.	.
.	.	.
17		1.06×10^7
18		1.09×10^7
19		→ 1.10×10^7 ←
20		1.09×10^7
	$\sum L_n = 7.9 \times 10^5$	

NOTE: In both examples about 10% of the light appears in the brightest image.

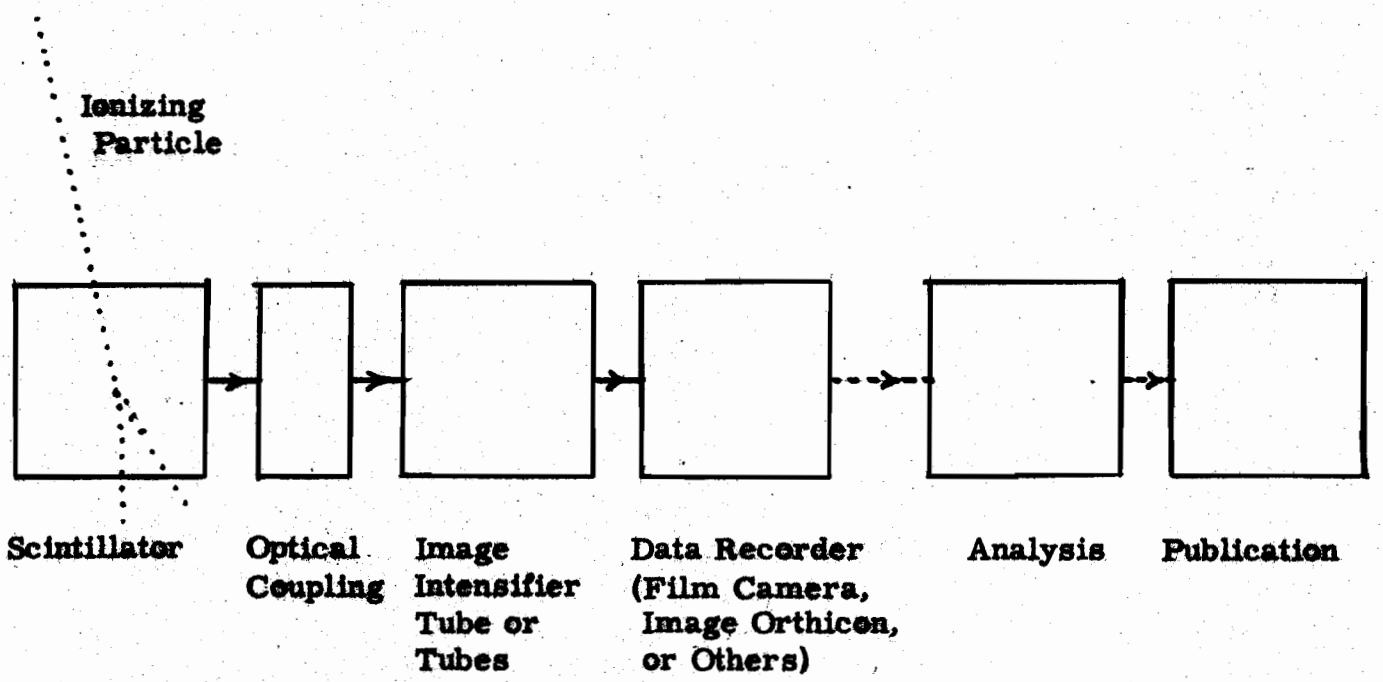

LUMINESCENT CHAMBER SYSTEM (SCHEMATIC)

Fig. 1

Single-Crystal Scintillator Geometry

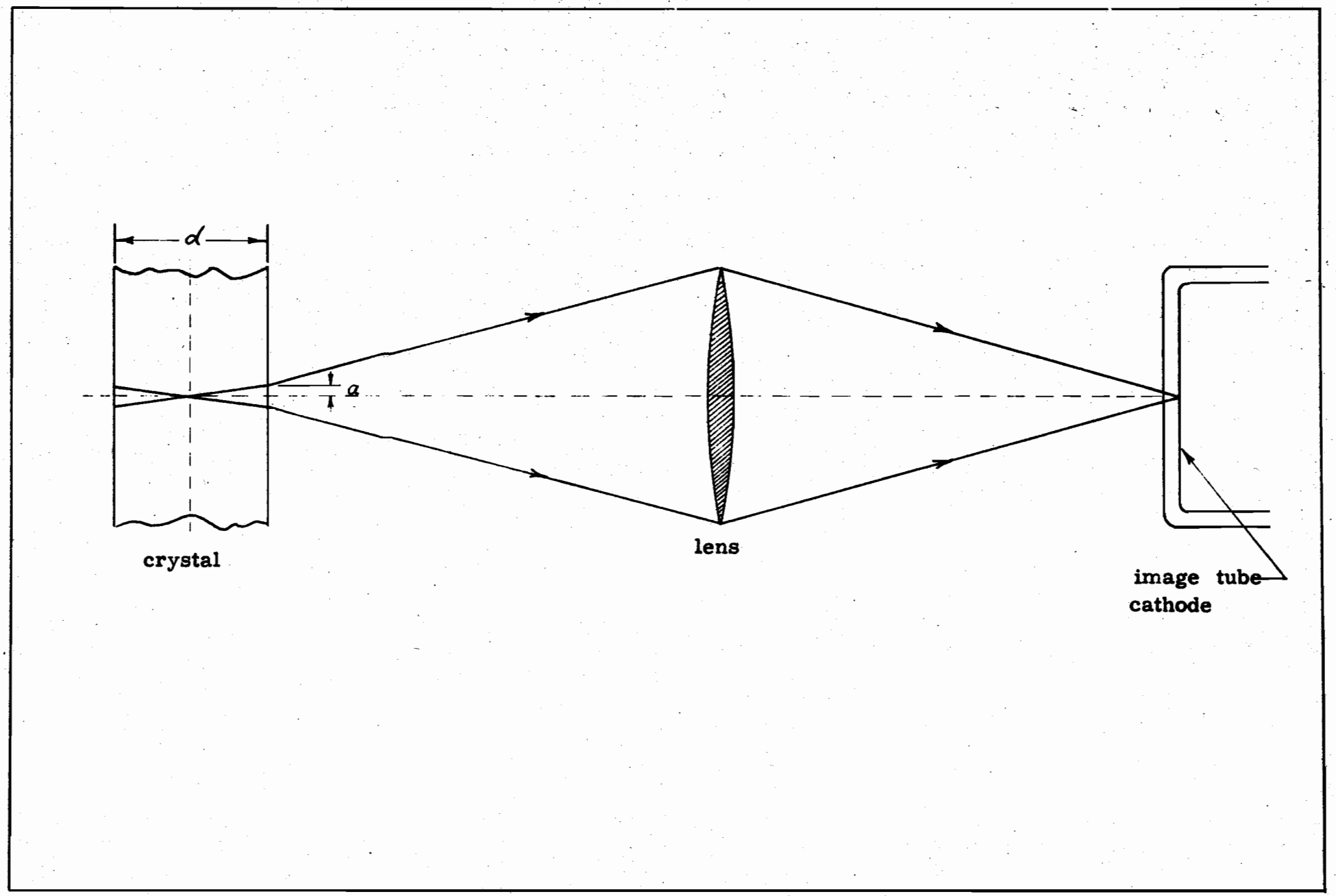

FIG 2

Axially Symmetric Feedback Geometry using Meniscus - Corrected Spherical Mirrors

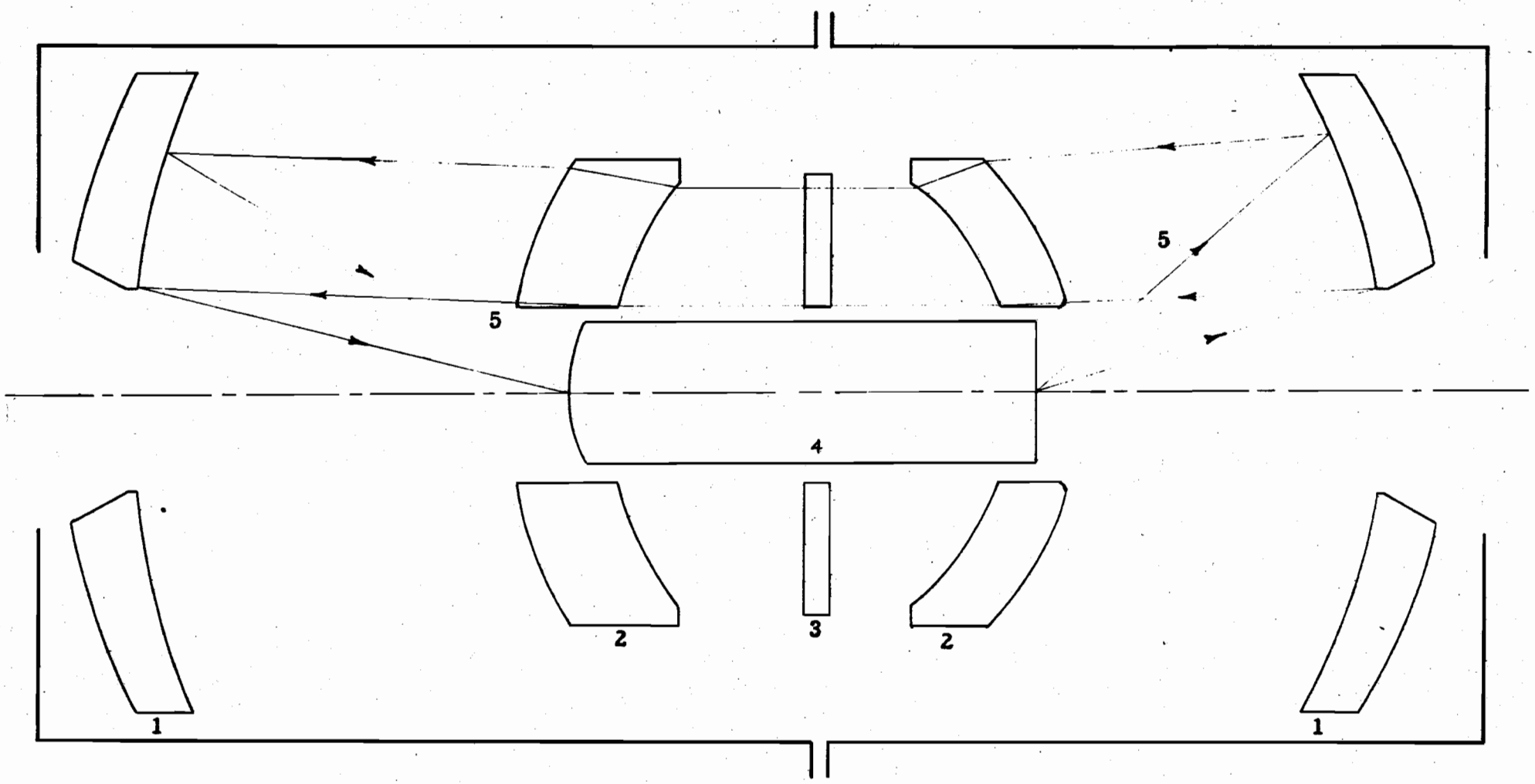

Fig. 3

1. Spherical Mirrors
2. Meniscus Correctors
3. Schmidt Corrector
4. Image Tube (DuMont unity mag. or RCA two-stage C73458)
5. Light Rays

Regenerative Geometry sing Minifier

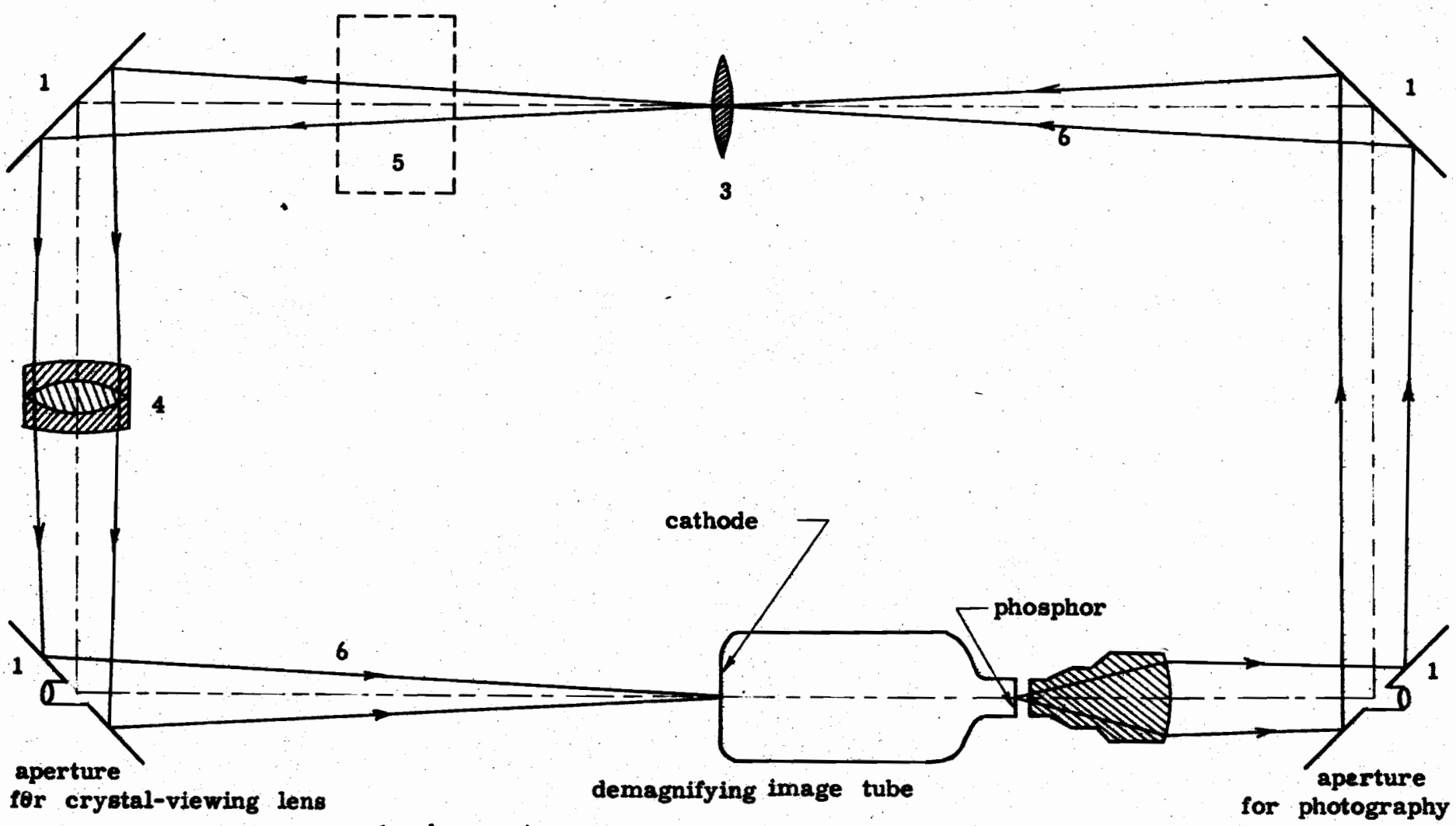

1- plane mirrors

2- large compound refractive lens (e.g. f/ .75)

3- field lens

4-second objective (two f / 5 acromats back-to-back)

5- image erecting prism or mirror system (optional)

6- light rays

FIG. 4

Two Tube Regenerative Geometry

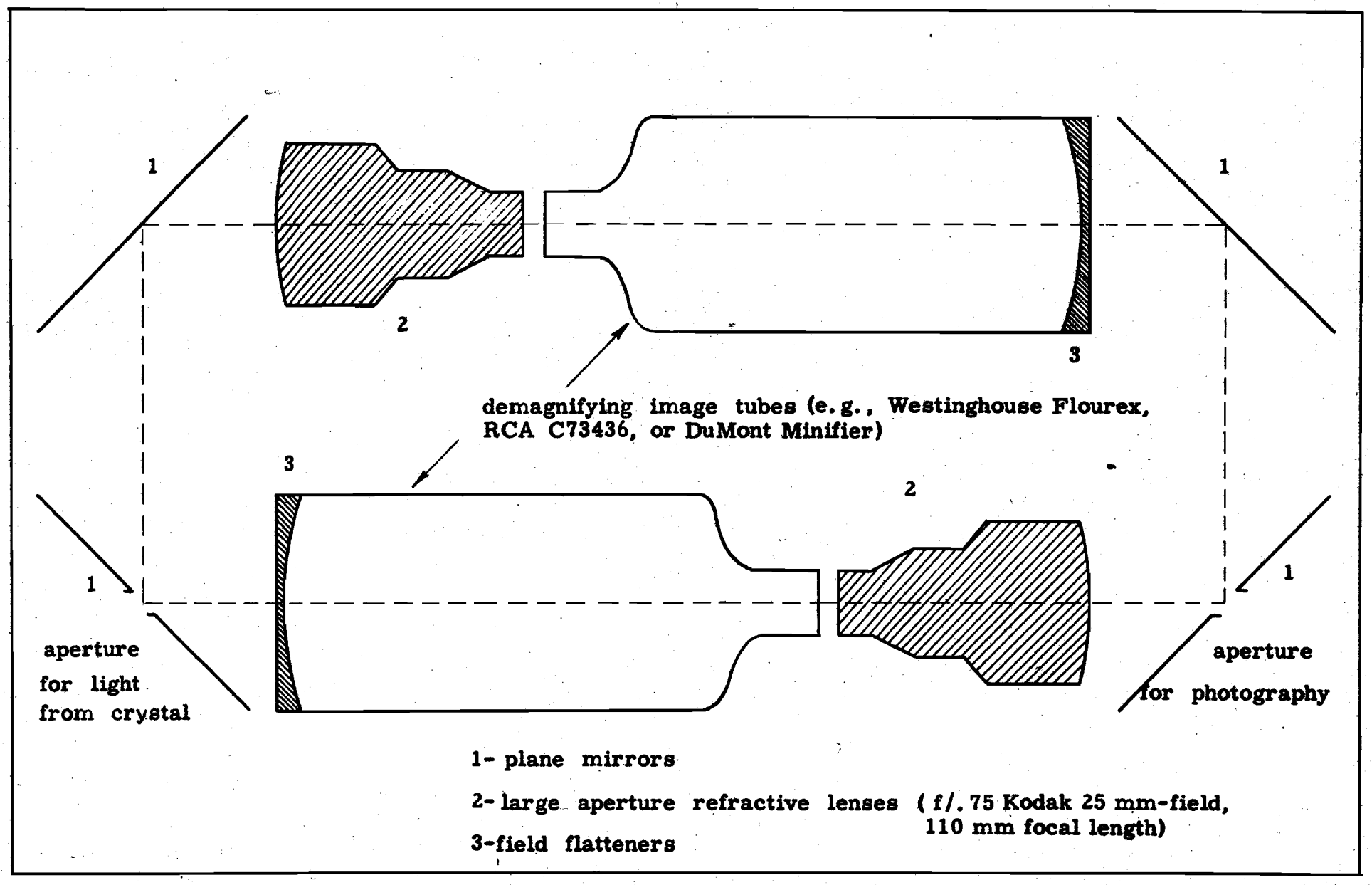

FIG 5

Regenerative Geometry using Magnetically-Focused Image Tube

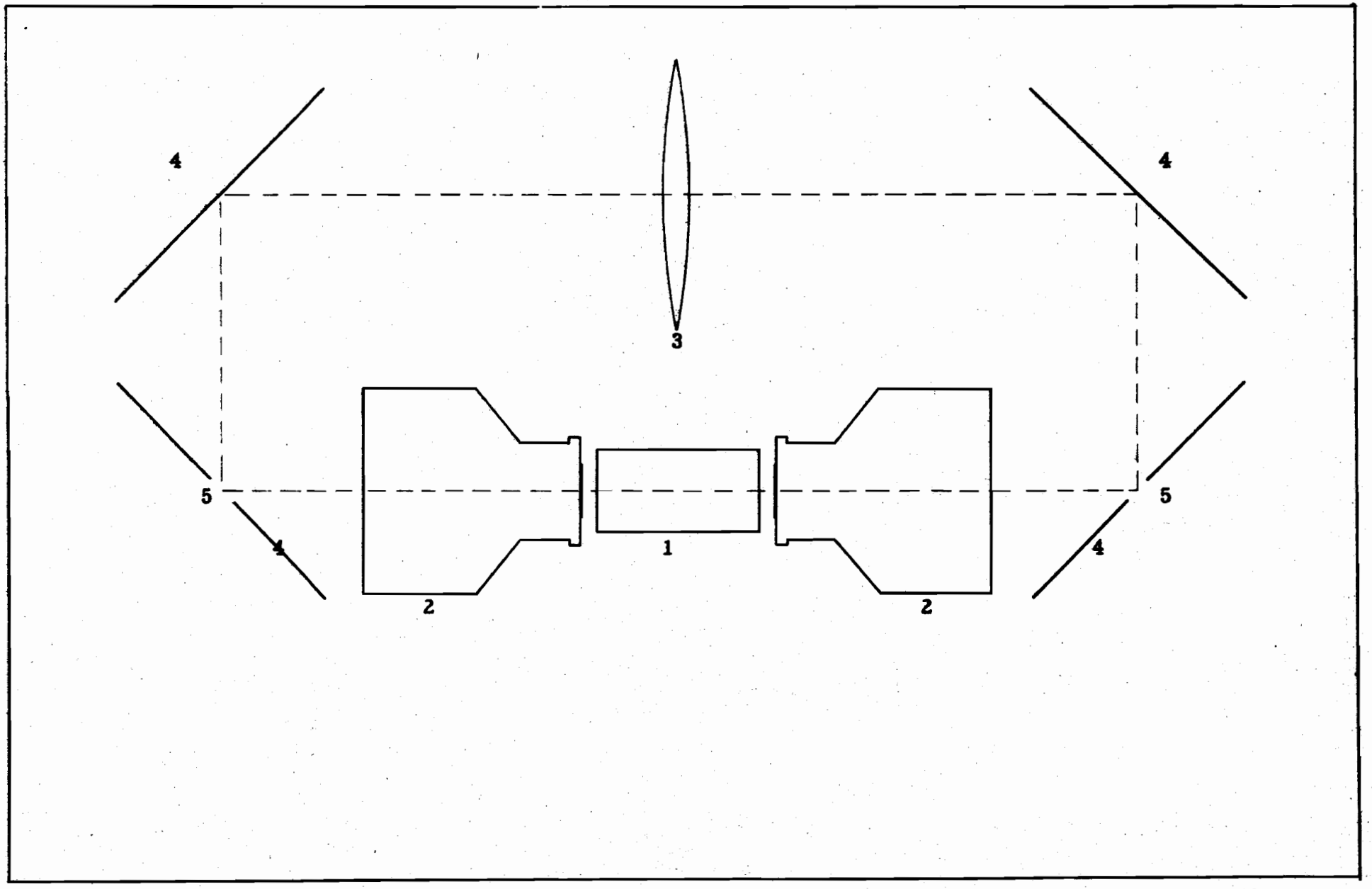

FIG 6

1. Magnetically-focused unity magnification image tube (DuMont 2 inch tube)
2. f/.7 Old Delft 40 mm-field refractive lenses
3. Field lens
4. Plane mirrors
5. Entrance and exit apertures

Image Tube Geometry using Internal Optical Regeneration

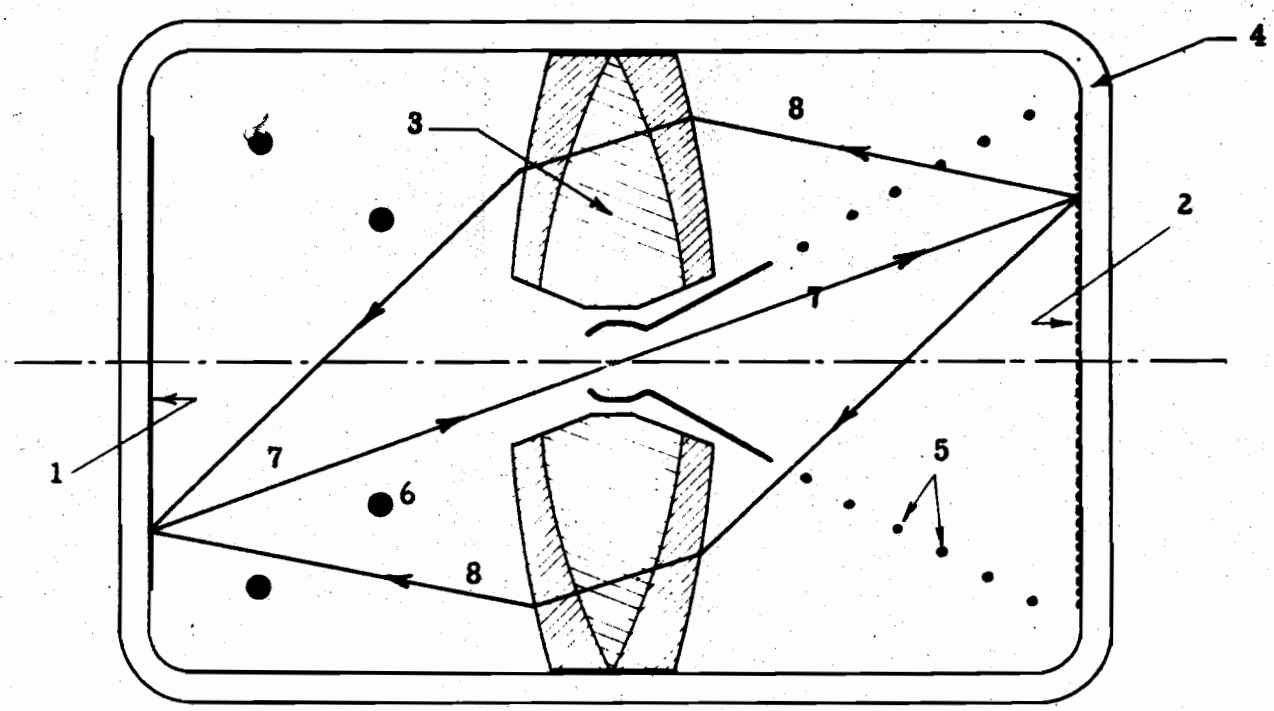

1. Photocathode
2. Non-Aluminized Phosphor
3. Compound Lens
4. Vacuum Envelope
5. Anode Grid Structure
6. Focusing Electrodes
7. Electron Trajectory
8. Light Rays

Fig. 7

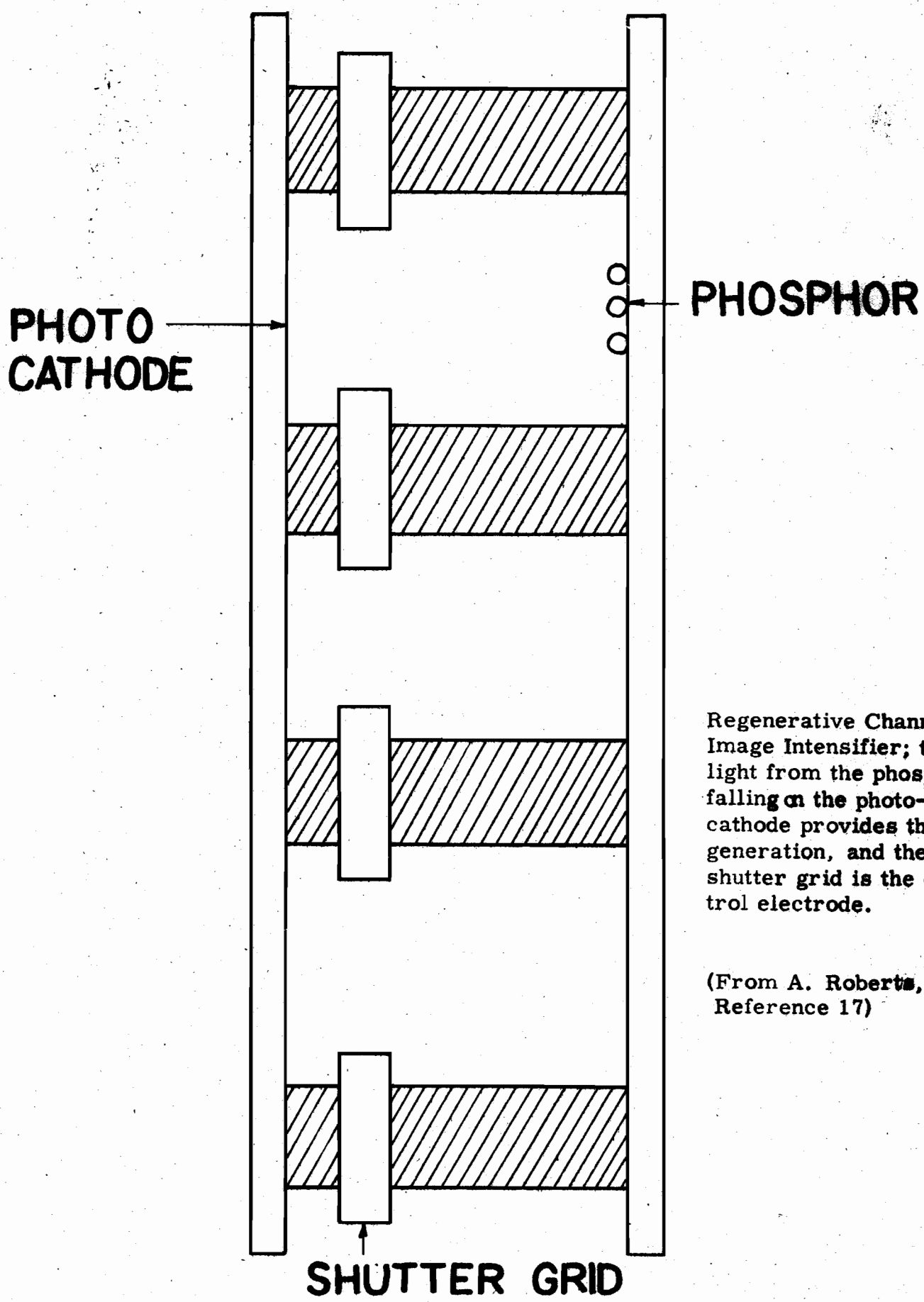

Regenerative Channelled Image Intensifier; the light from the phosphor falling on the photocathode provides the regeneration, and the shutter grid is the control electrode.

(From A. Roberts, Reference 17)

Fig. 8

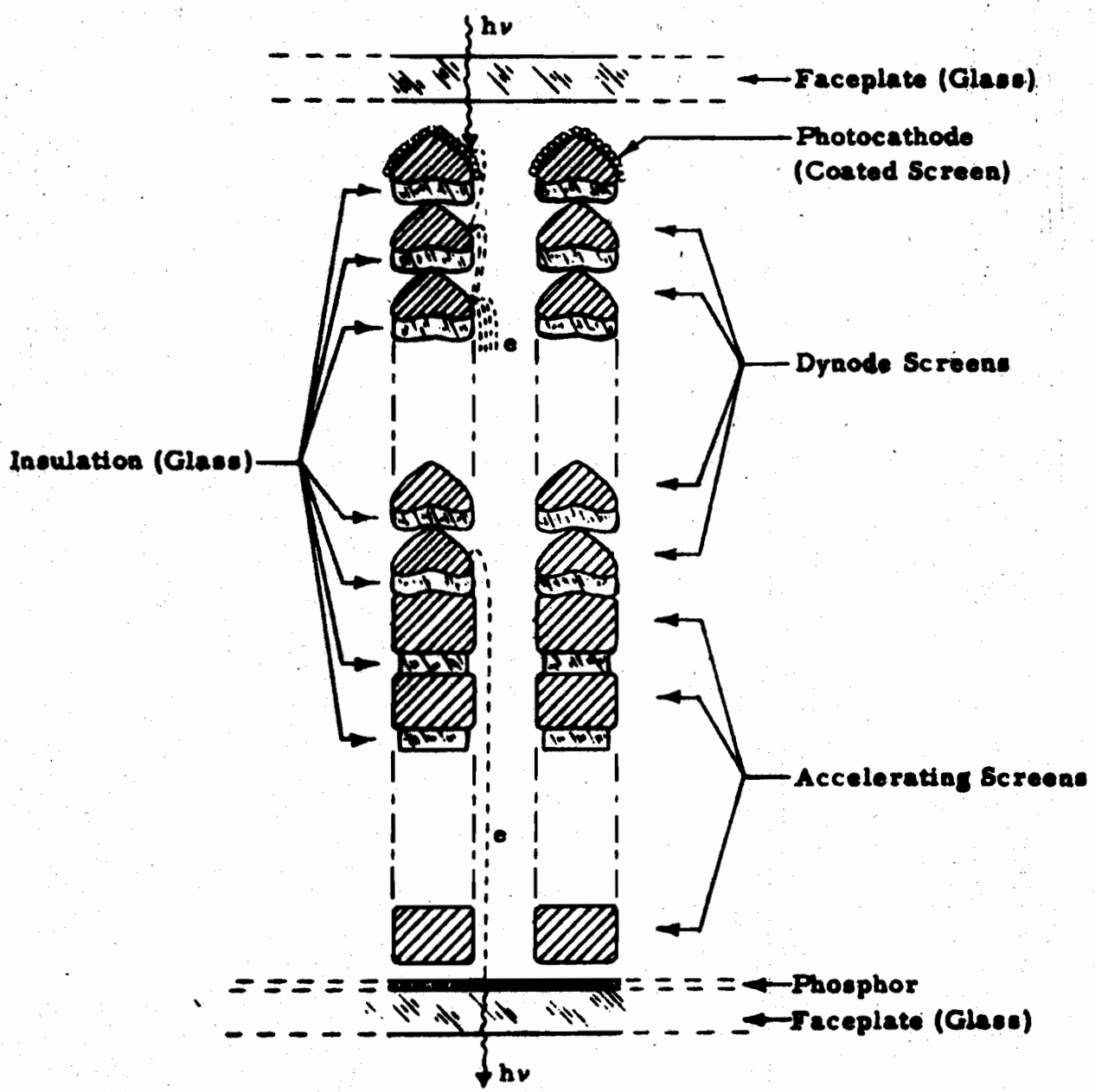

NOTE: Commercial electroformed screens have cross sections approximately as shown.

Channelled Secondary Electron Multiplier

(From the Chicago Midway Laboratories proposal to the AEC)

Fig. 9