Fermilab Library
0 1160 0038709 6

394

MIDWESTERN UNIVERSITIES RESEARCH ASSOCIATION

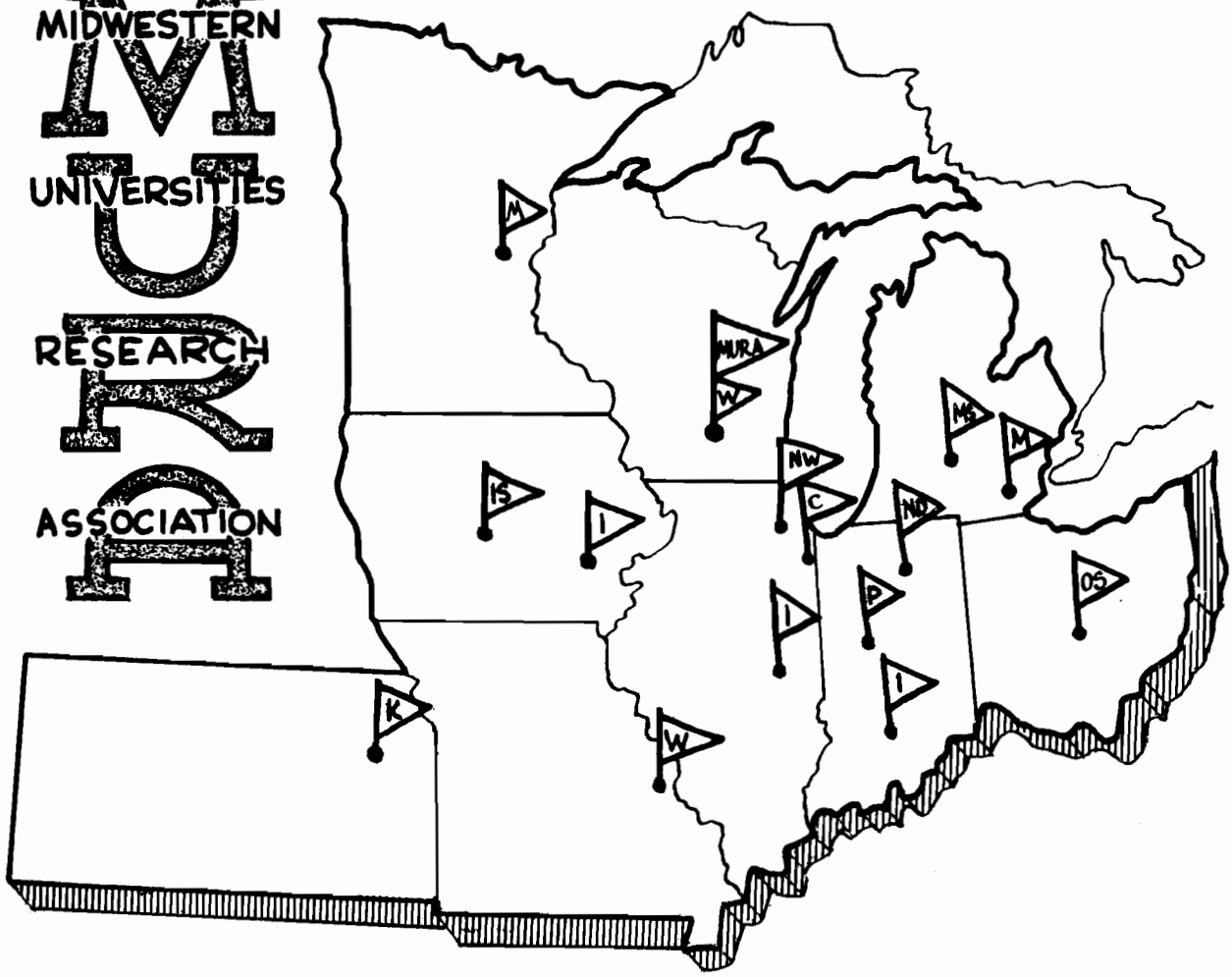

UNCERTAINTY IN THE DEFINITION OF MOMENTUM AND EMISSION ANGLE OF MESONS OR HYPERONS PRODUCED IN THE COLLIDING BEAM INTERACTION OF PROTONS

R. H. Bieri

REPORT **NUMBER** 394

MURA-394
Internal

MIDWESTERN UNIVERSITIES RESEARCH ASSOCIATION*

2203 University Avenue, Madison, Wisconsin

UNCERTAINTY IN THE DEFINITION OF MOMENTUM AND EMISSION ANGLE OF MESONS OR HYPERONS PRODUCED IN THE COLLIDING BEAM INTERACTION OF PROTONS

R. H. Bieri

March 31, 1958

ABSTRACT

By studying reaction products in a colliding beam experiment, an energy spread in the beam introduces uncertainties in momentum and angle observations on the emitted particle, which are discussed. Simplifying assumptions lead to the result, that the relative error in the beam energy definition causes an equal relative error in momentum and angle.

*Supported by Contract AEC No. AT (11-1)-384

The purpose of this paper is to give simple relations between the radial beam energy spread and the momentum or emission angle. Only the case of 180° interactions is considered. More elaborate calculations were done by Chang (MURA-207).

It is assumed that in a head-on collision between two protons of total energy $E_1 = E_2 = E$, a meson or hyperon is emitted at an angle θ with a momentum $\vec{p} = \frac{E}{c} = (p_x^2 + p_y^2)^{1/2}$. If one considers now the interaction of two beams with energy $E_1 = E + \Delta E$, $E_2 = E - \Delta E$,

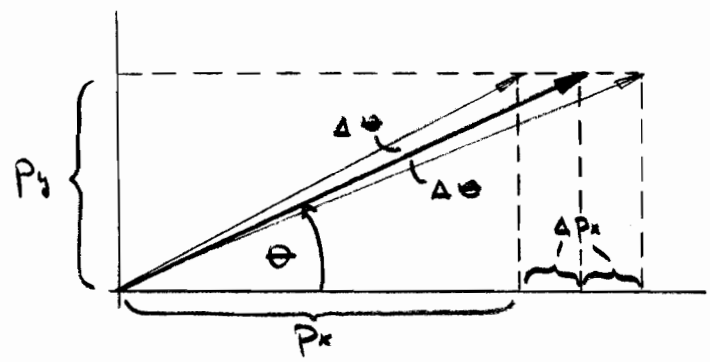

then the reaction energy in the CM system remains unchanged (in first order) and therefore also the momentum of the outgoing particle. However, the observation of this process doesn't take place any more in the CM system because of the inequality of the two-beam energies. To an observer in the Lab system, the x component of the particle momentum appears increased or decreased by

$$\pm \Delta p_x = m_m \gamma_m v_{cM} \; ; \; \left(\frac{v_{cM}}{c} \ll 1 \; ; \; \gamma_m = \frac{1}{(1-\beta_m^2)^{1/2}} \right)$$

while the y component remains constant. The emission angle in the Lab system is then

$$\tan\theta' = \frac{p_y'}{p_x'} = \frac{p_y}{p_x \pm \Delta p_x} \tag{1}$$

The equivalent relation for a collision of two particles of the same energy is

$$\tan\theta = \frac{p_y}{p_x} \tag{2}$$

From subtraction of (2) from (1), one finds

$$\tan\theta' - \tan\theta = \frac{\pm\Delta p_x}{p_x}\tan\theta' \tag{3}$$

For small angles, the tangent can be replaced by its argument and for small CM velocities with respect to the velocities of the protons, $\tan\theta'$ on the right side of (3) may be approximated by θ

$$\Delta\theta \approx \frac{\pm\Delta p_x}{p_x}\theta \qquad \text{or} \qquad \frac{\Delta\theta}{\theta} \approx \pm\frac{\Delta p_x}{p_x}$$

Estimate of v_{CM} from energy spread of beam.

The CM velocity is defined by

$$\vec{v}_{CM} = \frac{\vec{p}_1 + \vec{p}_2}{M_1 + M_2}$$

where $M_i = M_p\gamma_i$ are the actual masses of the two protons. With $\vec{p}_1 + \vec{p}_2 = \vec{p}_T$; $2\gamma M_p c^2 = E_1 + E_2 = E_T$

$$v_{CM} = \frac{\vec{p}_T c^2}{E_T}$$

Again for a collision of two beams with energy $E_1 = E + \Delta E$ and $E_2 = E - \Delta E$

$$c^2\vec{p}_1^{\,2} = (E+\Delta E)^2 - M_p^2c^4$$
$$c^2\vec{p}_2^{\,2} = (E-\Delta E)^2 - M_p^2c^4$$

$$v_{CM} = \frac{c}{2E}\left[\left\{(E+\Delta E)^2 - M_p^2c^4\right\}^{1/2} - \left\{(E-\Delta E)^2 - M_p^2c^4\right\}^{1/2}\right] \approx c\frac{\Delta E}{E}$$

for $(E \pm \Delta E) \gg M_p c^2$

This result applied to the expression found for the change in momentum or emission angle leads to the relation

$$\frac{\Delta\theta}{\theta} \approx \frac{\Delta p_x}{p_x} \approx \frac{\Delta\vec{p}}{\vec{p}} \approx \frac{\Delta E}{E} \approx \beta_{CM}$$