Fermilab Library
0 1160 0038658 5

301

MIDWESTERN UNIVERSITIES RESEARCH ASSOCIATION

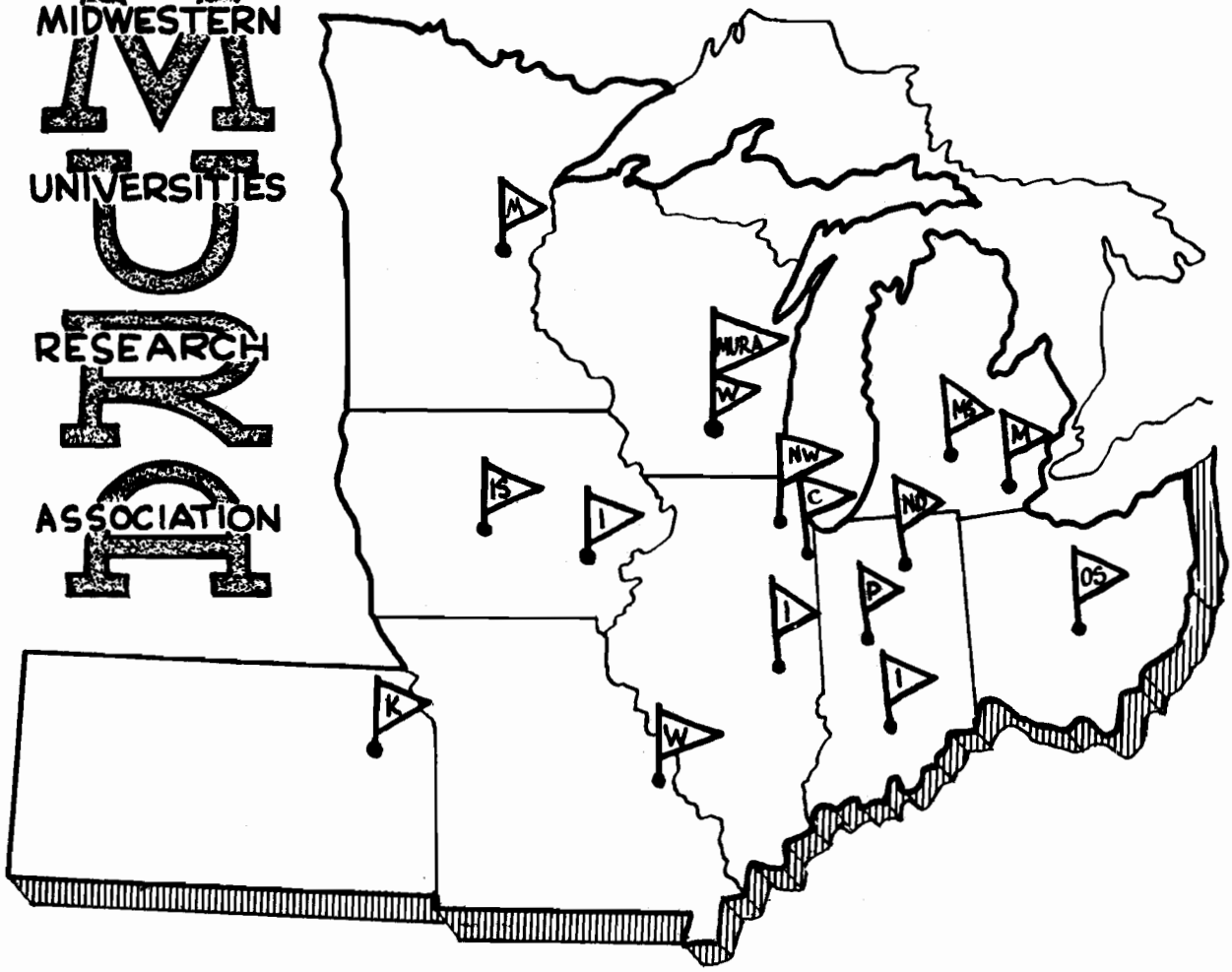

NORMAL MODES METHODS FOR BOUNDARY-EXCITED WAVEGUIDES

J. Van Bladel

REPORT **NUMBER** 301

MURA-301
Internal

MIDWESTERN UNIVERSITIES RESEARCH ASSOCIATION*

2203 University Avenue, Madison, Wisconsin

NORMAL MODES METHODS FOR BOUNDARY-EXCITED WAVEGUIDES

Jean Van Bladel

June, 1957

ABSTRACT

Normal modes methods are applied to field calculations in a waveguide coupled to outside space by holes in its boundary wall.

* Supported by Contract AEC #AT (11-1)-384

I. Introduction. The electromagnetic field within a cavity is uniquely determined by the current density $\bar{J}$ (x, y, z) in the cavity volume, and the tangential component of the electric field $\bar{E}$ at the boundary surface S (Figure 1). This component vanishes along those parts of S which consist of a perfectly conducting wall, and is different from zero across the surface of any apertures which couple the cavity with outside space. Explicit formulas giving the cavity field in terms of "volume" excitation $\bar{J}$ and "boundary" excitation $\bar{E}_{tang}$ are important in a number of problems, such as the determination of the resonant frequencies of coupled cavities. Formulas of that type can be obtained by using either Green's dyadic (1) or normal mode (2) methods. The two formulations are essentially equivalent, since Green's dyadic can be expressed in terms of the normal modes of the cavity (3). In the latter form, which is used in most practical applications, Green's dyadic appears to be a mere intermediate step in the normal mode formulation. A similar situation arises in the study of boundary excited wave-guides. Here, again, Green's dyadic can be used in principle, but its analytical expression always involves the normal modes of the duct (4). It is the purpose of the present paper to solve the boundary excitation problem directly by normal mode procedures. It is the author's experience that such procedures are eminently suitable for practical computations. The formalism is clearer, the probability of mixing up coefficients is lower, and a very desirable flexibility is afforded by the independence of the method on the type of boundary conditions existing at the terminal planes S_1 and S_2 (Figure 2). In the mathematical treatment which follows, volume excitation $\bar{J}$ is added for reasons of completeness, although

its effects are quite satisfactorily analyzed in the existing literature.

II. Consider the following two-dimensional problems

(2.1) $\nabla^2_{xy}\varphi + k^2\varphi = \frac{\partial^2\varphi}{\partial x^2} + \frac{\partial^2\varphi}{\partial y^2} + k^2\varphi = 0$, with $\varphi = 0$ on the contour C of the wave guide

(2.2) $\nabla^2_{xy}\psi + k^2\psi = 0$ with $\frac{\partial\psi}{\partial n} = 0$ on C (n is the outward normal to C)

The solutions of (2.1) form a denumerable infinite closed and complete set of orthogonal eigenfunctions, which will be denoted* by $\mathcal{E}_{zm}(x,y)$ and the corresponding eigenvalues by k^2_m. Another such set is formed by the solutions of (2.2), denoted by $\mathcal{H}_{zn}(x,y)$, with eigenvalues k^2_n. The eigenfunctions $\mathcal{E}_{zm}$ and $\mathcal{H}_{zn}$ will be used to expand the z component of the electric and magnetic fields respectively.

(2.3) $\nabla^2_{xy} V = 0$, with V=constant on each closed curve of boundary C.

Equation (2.3) has 0, 1, --n. linearly independent solutions depending on whether the wave-guide space is simply, doubly. . . (n + 1)-fold multiply-connected. The solutions of (2.3) will be denoted by V_o.

Consider now the following two sets of vectors.

<u>Set 1</u> 1.1 $\text{grad}_{xy}\,\mathcal{E}_{zm}$, denoted by $\overline{\mathcal{E}}_{tm}(x,y)$.

1.2 $\overline{u}_z \times \text{grad}_{xy}\,\mathcal{H}_{zm}$, denoted by $\overline{\mathcal{E}}_{tn}(x,y)$

1.3 $\text{grad}_{xy}\,V_o$, denoted by $\overline{\mathcal{E}}_{to}(x,y)$

<u>Set 2</u> 2.1 $\text{grad}_{xy}\,\mathcal{H}_{zn}$, denoted by $\overline{\mathcal{H}}_{tn}(x,y)$

2.2 $\overline{u}_z \times \text{grad}_{xy}\,\mathcal{E}_{zm}$, denoted by $\overline{\mathcal{H}}_{tm}(x,y)$

2.3 $\overline{u}_z \times \text{grad}\,V_o$, denoted by $\overline{\mathcal{H}}_{to}(x,y)$

- - - - - - - - - - - - - - - - - -

* The subscripts m and n stand for a double set of indices j, k, not written explicitly for reasons of brevity.

The first set comprises the mutually orthogonal* eigenvectors of equation

(2.4) $$\nabla^2_{xy}\,\bar{A} + k^2\bar{A} = 0 \qquad \bar{A} \text{ perpendicular to C.}$$

The second set comprises the mutually orthogonal eigenvectors of

(2.5) $$\nabla^2_{xy}\,\bar{B} + k^2\bar{B} = 0 \qquad \bar{B} \text{ tangent to C.}$$

It will be noticed that $\bar{\mathcal{E}}_{tm}, \bar{\mathcal{H}}_{tn}, \bar{\mathcal{E}}_{to}, \bar{\mathcal{H}}_{to}$ are irrotational, $\bar{\mathcal{E}}_{tn}$, $\bar{\mathcal{H}}_{tm}, \bar{\mathcal{E}}_{to}, \bar{\mathcal{H}}_{to}$ solenöidal.** Each set of vectors forms a closed set in terms of which a sufficiently "smooth" two-dimensional vector can be expanded. Set 1 will be used to expand $\bar{E}_t$, transverse component of the electric field, set 2 to expand $\bar{H}_t$. More explicitly:

(2.6) $$\bar{E}(x,y,z,t) = \sum_m a_m(z,t)\bar{\mathcal{E}}_{tm}(x,y) + \sum_n b_n(z,t)\bar{\mathcal{E}}_{tn}(x,y) + \sum_o a_o(z,t)\bar{\mathcal{E}}_{to}(x,y) + \sum_m c_m(z,t)\mathcal{E}_{zm}(x,y)\bar{u}_z$$

(2.7) $$\bar{H}(x,y,z,t) = \sum_m \alpha_m(z,t)\bar{\mathcal{H}}_{tm}(x,y) + \sum_n \beta_n(z,t)\bar{\mathcal{H}}_{tn}(x,y) + \sum_o \alpha_o(z,t)\bar{\mathcal{H}}_{to}(x,y) + \sum_n \gamma_n(z,t)\mathcal{H}_{zn}(x,y)\bar{u}_z$$

The equality sign must, as usual, be understood in the sense of convergence in the mean. The problem is to determine the differential equations satisfied by the various (z, t) dependent coefficients. These equations are listed below without proof, a typical proof being given in the appendix.

(a) for the O modes

(2.8) $$\frac{\partial a_o}{\partial z} + \mu\frac{\partial \alpha_o}{\partial t} = -\frac{1}{N_o^2}\int_C (\bar{u}_n \times \bar{E})\cdot\bar{\mathcal{H}}_{to}\,dc = \frac{1}{N_o^2}\int_C E_z\frac{\partial V_o}{\partial n}\,dc$$

(2.9) $$\frac{\partial \alpha_o}{\partial z} + \varepsilon\frac{\partial a_o}{\partial t} = -\frac{1}{N_o^2}\iint_S \bar{J}\cdot\bar{\mathcal{E}}_{to}\,dS$$

---

* The orthogonality property is of the form $\iint_S \bar{\mathcal{E}}_{tk}\cdot\bar{\mathcal{E}}_{ti}\,dS = \delta_{ik}$

** The m, n and o functions are, except for multiplicative constants, the components of the TE, TM and TEM modes of classical wave-guide theory. The multiplicative constants have been dropped for reasons of clarity. They will be reintroduced automatically in the sequel (see. eq. 3.6).

(b) for the M modes

(2.10) $$\frac{\partial a_m}{\partial z} + \mu \frac{\partial d_m}{\partial t} - c_m = -\frac{1}{N_m^2}\int_c (\bar{u}_n \times \bar{E}) \cdot \bar{\mathcal{H}}_{tm}\, dc = \frac{1}{N_m^2}\int E_z \cdot \frac{\partial \mathcal{E}_{zm}}{\partial n}\, dc$$

(2.11) $$\frac{\partial d_m}{\partial z} + \varepsilon \frac{\partial a_m}{\partial t} = -\frac{1}{N_m^2}\iint_S \bar{J} \cdot \bar{\mathcal{E}}_{tm}\, dS$$

(2.12) $$d_m + \frac{\varepsilon}{k_m^2}\frac{\partial c_m}{\partial t} = -\frac{1}{N_m^2}\iint_S \bar{J} \cdot \bar{\mathcal{E}}_{zm}\, dS$$

(c) for the N modes

(2.13) $$\frac{\partial \beta_n}{\partial z} - \varepsilon \frac{\partial b_n}{\partial t} - \gamma_n = \frac{1}{N_n^2}\iint_S \bar{J} \cdot \bar{\mathcal{E}}_{tn}\, dS$$

(2.14) $$\frac{\partial b_n}{\partial z} - \mu \frac{\partial \beta_n}{\partial t} = \frac{1}{N_n^2}\int_c (\bar{u}_n \times \bar{E}) \cdot \bar{\mathcal{H}}_{tn}\, dc = -\frac{1}{N_n^2}\int_c E_z \cdot \frac{\partial \mathcal{H}_{zn}}{\partial c}\, dc$$

(2.15) $$b_n - \frac{\mu}{k_n^2}\frac{\partial \gamma_n}{\partial t} = \frac{1}{N_n^2}\int_c (\bar{u}_n \times \bar{E}) \cdot \bar{\mathcal{H}}_{zn}\, dc = \frac{1}{N_n^2}\int_c E_c\, \mathcal{H}_{zn}\, dc$$

Some of the notation should be clarified:

$$N_0^2 = \iint_S |\bar{\mathcal{E}}_{t0}|^2 dS$$

$$N_m^2 = \iint_S |\bar{\mathcal{E}}_{tm}|^2 dS = \iint_S |\bar{\mathcal{H}}_{tm}|^2 dS = k_m^2 \iint_S \mathcal{E}_{zm}^2\, dS$$

$$N_n^2 = \iint_S |\bar{\mathcal{E}}_{tn}|^2 dS = \iint_S |\bar{\mathcal{H}}_{tn}|^2 dS = k_n^2 \iint_S \mathcal{H}_{zn}^2\, dS$$

$$\bar{\mathcal{E}}_{zm} = \mathcal{E}_{zm}\bar{u}_z \;, \quad \bar{\mathcal{H}}_{zn} = \mathcal{H}_{zn}\bar{u}_z$$

$\bar{u}_n$ = unit vector pointing out of the guide. $(\bar{u}_n, \bar{u}_c, \bar{u}_z)$ form a right-handed frame

The second members of equations (2.8) to (2.15) are known functions of z and t. One readily recognizes the formal analogy between the volume electric current $\bar{J}$, which couples to the $\bar{E}$ field of the mode, and the fictive magnetic surface current $\bar{u}_n \times \bar{E}$, which couples to the $\bar{H}$ field of the mode.

III. At this point the vectorial field problem has been reduced to a set of three independent systems of partial differential equations in z and t . The solution of the latter can now proceed, given suitable initial conditions at some time t = o, and boundary conditions* at terminal planes S_1 and S_2. The usual arsenal of mathematical techniques is available for the purpose. Laplace and Fourier transforms can be used to eliminate the time dependence in the equations. Laplace and Fourier transforms, or finite Fourier transforms in z are helpful for guides of respectively infinite, semi-infinite or finite length. It is advisable to start from equations involving one function only. Such equations, which can be obtained by elimination, are:

$$(3.1)\quad \frac{\partial^2 a_o}{\partial z^2} - \varepsilon\mu \frac{\partial^2 a_o}{\partial t^2} = \frac{1}{N_o^2}\left[\mu \frac{\partial}{\partial t}\iint_S \bar{J}\cdot\bar{\mathcal{E}}_{to}\, dS - \frac{\partial}{\partial z}\int_c (\bar{u}_n \times \bar{E})\cdot\bar{\mathcal{H}}_{to}\, dc\right]$$

$$(3.2)\quad \frac{\partial^2 \alpha_o}{\partial z^2} - \varepsilon\mu \frac{\partial^2 \alpha_o}{\partial t^2} = \frac{1}{N_o^2}\left[\varepsilon \frac{\partial}{\partial t}\int_c (\bar{u}_n \times \bar{E})\cdot\bar{\mathcal{H}}_{to}\, dc - \frac{\partial}{\partial z}\iint_S \bar{J}\cdot\bar{\mathcal{E}}_{to}\, dS\right]$$

$$(3.3)\quad \frac{\partial^2 b_n}{\partial z^2} - \varepsilon\mu \frac{\partial^2 b_n}{\partial t^2} - k_n^2 b_n = \frac{1}{N_n^2}\left[\mu \frac{\partial}{\partial t}\iint_S \bar{J}\cdot\bar{\mathcal{E}}_{tn}\, dS + \frac{\partial}{\partial z}\int_c (\bar{u}_n \times \bar{E})\cdot\bar{\mathcal{H}}_{tn}\, dc - k_n^2 \int_c (\bar{u}_n \times \bar{E})\,\bar{\mathcal{H}}_{zn}\, dc\right]$$

$$(3.4)\quad \frac{\partial^2 \alpha_m}{\partial z^2} - \varepsilon\mu \frac{\partial^2 \alpha_m}{\partial t^2} - k_m^2 \alpha_m = \frac{1}{N_m^2}\left[\varepsilon \frac{\partial}{\partial t}\int_c (\bar{u}_n \times \bar{E})\,\bar{\mathcal{H}}_{tm}\, dc - \frac{\partial}{\partial z}\iint_S \bar{J}\cdot\bar{\mathcal{E}}_{tm}\, dS + k_m^2 \iint_S \bar{J}\cdot\bar{\mathcal{E}}_{zm}\, dc\right]$$

Typical of the problems which can be solved by normal modes techniques is the determination of the fields inside a semi-infinite coaxial line with an infinitely narrow gap in its outer conductor. Assume that a voltage V is suddenly applied across the gap at time t = 0 (Figure 3). The solution is then obtained by setting

- - - - - - - - - - - - - - - - - -

* Example: γ_n, a_m, a_o, b_n vanish at all times on a perfectly conducting terminal plane.

$$\bar{J}=0\ ,\ \bar{u}_m \times \bar{E} = \bar{u}_m \times \left[-V\delta(z)\bar{u}_z H(t)\right] = V.\,H(t).\,\delta(z)\,\bar{u}_c \qquad (H = \text{step function})$$

in the second members of equations (2. 8) to (3. 4). The latter equations, incidentally, contain all the familiar (5) results for the normal modes in a region free of volume and boundary excitation. For an "m" mode in sinusoidal time-dependence, for instance, equations (2. 10) to (2. 12) show that

c_m must satisfy

$$\frac{d^2 c_m}{dz^2} + (\omega^2 \varepsilon\mu - k_m^2)c_m = \frac{d^2 c_m}{dz^2} + \gamma_m^2 c_m = 0 \tag{3.5}$$

If the solution $e^{-j\gamma_m z}$ is chosen, a_m and α_m can be computed as:

$$a_m = \frac{1}{k_m^2}\frac{dc_m}{dz} = -j\frac{\gamma_m}{k_m^2}e^{-j\gamma_m z} \tag{3.6}$$

$$\alpha_m = -\frac{j\omega\varepsilon}{k_m^2}c_m = -\frac{j\omega\varepsilon}{k_m^2}e^{-j\gamma_m z} \tag{3.7}$$

yielding the usual proportionality relations between the mode components of a progressive wave.

To conclude, mention should be made of the successful application of the normal model formalism to the computation of fields inside a gap-excited particle accelerator.(6).

APPENDIX

A relation such as (2.10) finds its origin in the following Maxwell's equation.

$$\text{(4.1)} \qquad \operatorname{curl} \overline{E} = -\mu \frac{\partial \overline{H}}{\partial t}$$

The expansion for $\overline{H}$, namely (2.7), can be safely introduced in the second member. The first member, however, cannot be obtained by merely "curling" equation (2.6) term by term, i.e. summing the curls of the individual terms of the expansion for $\overline{E}$. It is necessary, on the contrary, to expand curl separately as:

$$\text{(4.2)} \qquad \operatorname{curl} \overline{E} = \sum_m u_m \overline{\mathcal{H}}_{tm} + \sum_n v_n \overline{\mathcal{H}}_{tn} + \sum_n w_n \overline{\mathcal{H}}_{zn} + \sum_o v_o \overline{\mathcal{H}}_{to}$$

The coefficient u_m is found to be

$$\text{(4.3)} \qquad u_m = \frac{\iint_S \overline{\mathcal{H}}_{tm}(x,y) \cdot \operatorname{curl} \overline{E}(x,y,z,t)\, dS}{\iint_S |\overline{\mathcal{H}}_{tm}(x,y)|^2\, dS}$$

This result is obtained by multiplying (4.2) on both sides by $\overline{\mathcal{H}}_{tm}$, integrating over the cross-sections S, and making use of the orthogonality properties of the various $\overline{\mathcal{H}}_t$. The next step is to transform the numerator by using the following formula of vector analysis:

$$\text{(4.4)} \qquad \operatorname{curl} \overline{E} = \operatorname{curl}_{xy} \overline{E}_t + \operatorname{curl}_{xy} \overline{E}_z + \frac{\partial}{\partial z}(\overline{u}_z \times \overline{E}_t)$$

where curl_{xy} indicate that the derivatives with respect to x and y only have been kept in the normal formula for the curl. Multiplying both sides of (4.4) by $\overline{\mathcal{H}}_{tm}$ yields:

$$(4.5)\quad \overline{\mathcal{H}}_{tm}\cdot \operatorname{curl}\overline{E} = \overline{u}_z\cdot\left(\frac{\partial \overline{E}_t}{\partial z}\times\overline{\mathcal{H}}_{tm}\right)+\overline{\mathcal{H}}_{tm}\cdot\operatorname{curl}\overline{E}_z = \overline{u}_z\cdot\left(\frac{\partial \overline{E}_t}{\partial z}\times\overline{\mathcal{H}}_{tm}\right)+\overline{E}_z\cdot\operatorname{curl}_{xy}\overline{\mathcal{H}}_{tm}-\operatorname{div}_{xy}\left(\overline{\mathcal{H}}_{tm}\times\overline{E}_z\right)$$

If one uses the fact that $\overline{\mathcal{H}}_{tm}=\overline{u}_z\times\overline{\mathcal{E}}_{tm}$, $\operatorname{curl}_{xy}\overline{\mathcal{H}}_{tm}=-k_m^2\,\overline{\mathcal{E}}_{zm}$, integrates over the cross-section S, and applies the divergence theorem, u_m turns out to be:

$$(4.6)\quad u_m=\frac{1}{N_m^2}\left[\frac{\partial}{\partial z}\iint_S \overline{E}_t\cdot\overline{\mathcal{E}}_{tm}\,dS-k_m^2\iint_S \overline{E}_z\cdot\overline{\mathcal{E}}_{zm}\,dS-\int_C E_z\,\frac{\partial \mathcal{E}_{zm}}{\partial n}\,dc\right]$$

The first two integrals can be expressed in terms of a_m and c_m (see 2.5), and, as a consequence:

$$(4.7)\quad u_m=\frac{\partial a_m}{\partial z}-c_m-\frac{1}{N_m^2}\int_C E_z\cdot\frac{\partial \mathcal{E}_{zm}}{\partial n}\,dc$$

from which (2.10) follows immediately by equating the coefficients of $\overline{\mathcal{E}}_{tm}$ in both members of (4.1).

List of Captions

Fig. 1. Cavity with hole in the wall.

Fig. 2. Boundary-excited wave-guide.

Fig. 3. Shorted coaxial line excited by gap in outer conductor.

REFERENCES

1. P. M. Morse and H. Feshbach. "Methods of Theoretical Physics". Vol. 2. p. 1782. (McGraw Hill Book Co. New York, 1953)

2. J. C. Slater "Microwave Electronics" p. 66 (Van Nostrand Co. New York, 1950)

3. P. M. Morse and H. Feshbach; loc. cit. p. 1777

4. P. M. Morse and H. Feshbach; loc. cit. p. 1825

5. See e. g. S. Ramo and J. R. Whinnery "Fields and Waves in Modern Radio" Ch. 9 (J. Wiley & Sons, New York, 1944).

6. J. Van Bladel "Fields in Gap-excited Rectangular Ducts" M. U. R. A. Report No. 259, 1957.

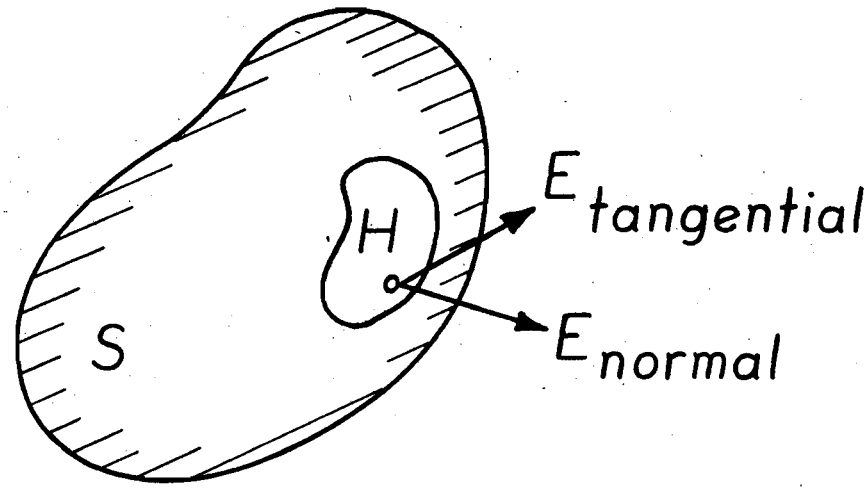

Fig. 1

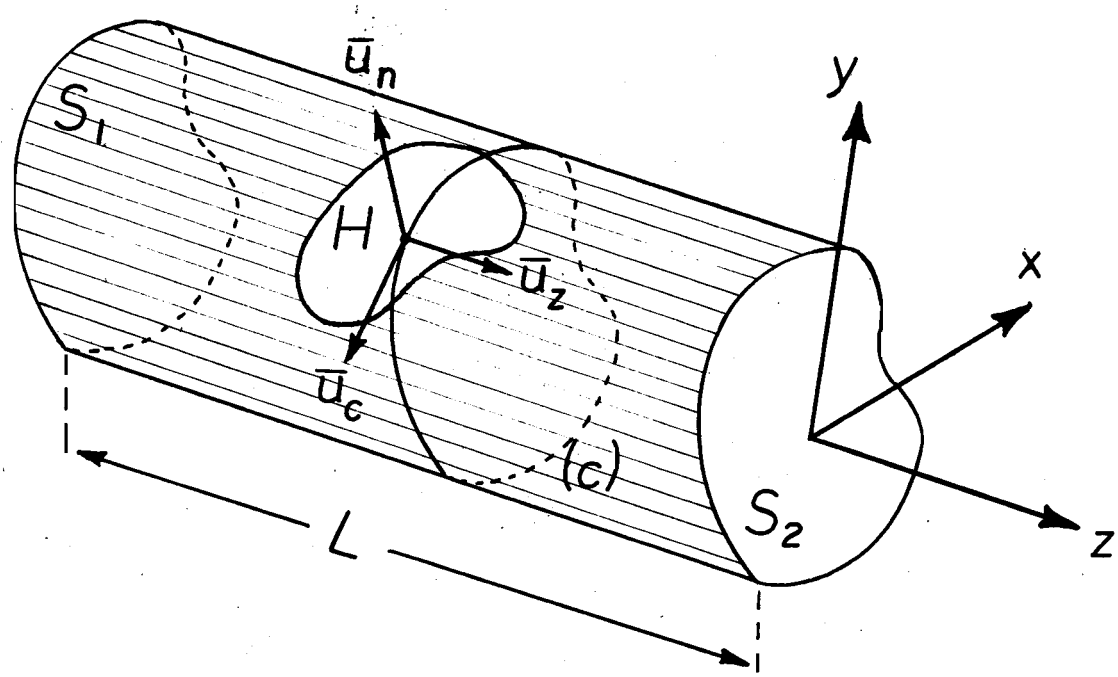

Fig. 2

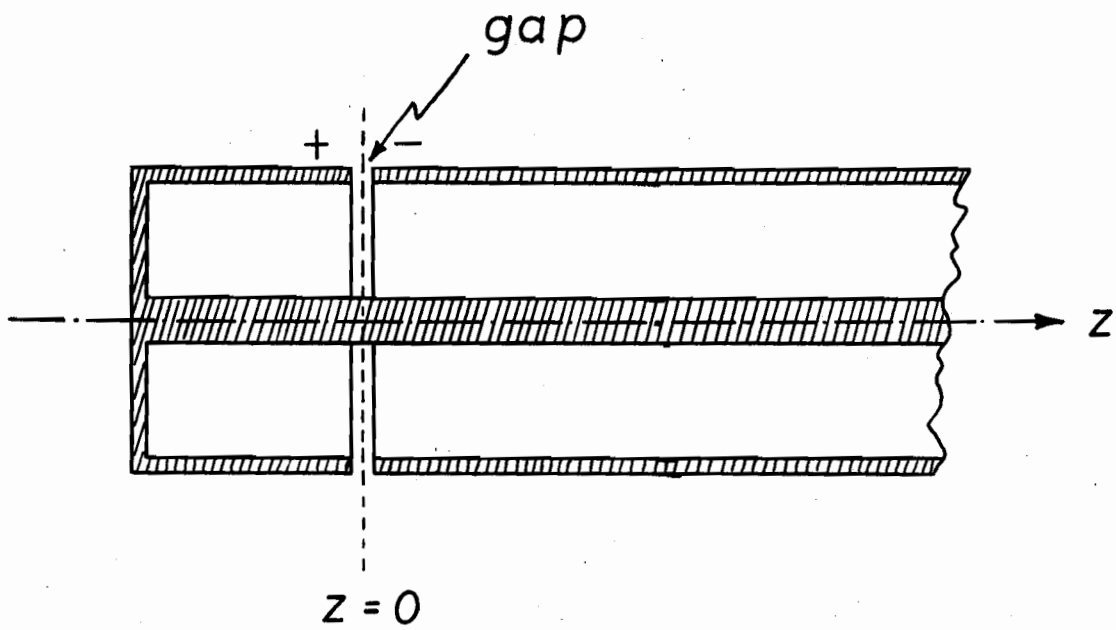

Fig. 3