Fermilab Library
0 1160 0038650 2

280

MIDWESTERN UNIVERSITIES RESEARCH ASSOCIATION

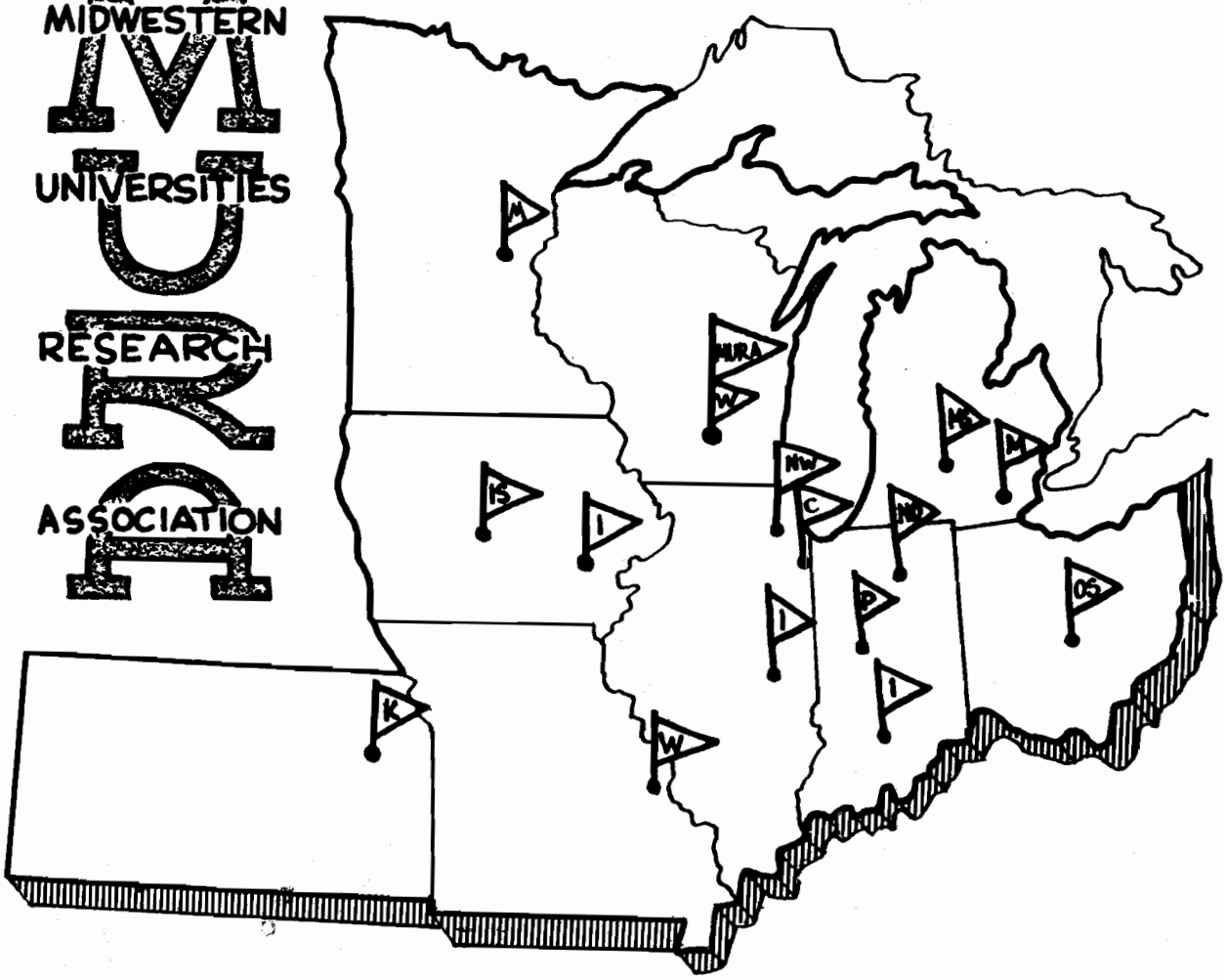

VACUUM TECHNIQUES FOR THE RANGE

10^{-8} mm Hg TO 10^{-10} mm Hg

REPORT **NUMBER** 280

MURA-280
Internal

MIDWESTERN UNIVERSITIES RESEARCH ASSOCIATION*

2203 University Avenue, Madison, Wisconsin

VACUUM TECHNIQUES FOR THE RANGE 10^{-8} mm Hg TO 10^{-10} mm Hg.

E.A. Day and F. E. Mills

May, 1957

* Supported by Contract AEC #AT(11-1)-384

INTRODUCTION

This report arises from many conversations between the authors and Professor Kerst, and a subsequent trip to the Matterhorn Project in Princeton, where high vacuum is utilized. (At Matterhorn, the authors had many enlightening conversations with Don Grave and J. G. Gorman, physicists engaged in the Matterhorn Project; with Joseph Liptok, shop foreman of the vacuum section; and with other Matterhorn personnel.)

We will try to summarize what we have learned about the actual technique used in the attainment of these vacua for the benefit of other MURA personnel.

The basic vacuum system is indeed simple (Fig. 1).

Figure 1

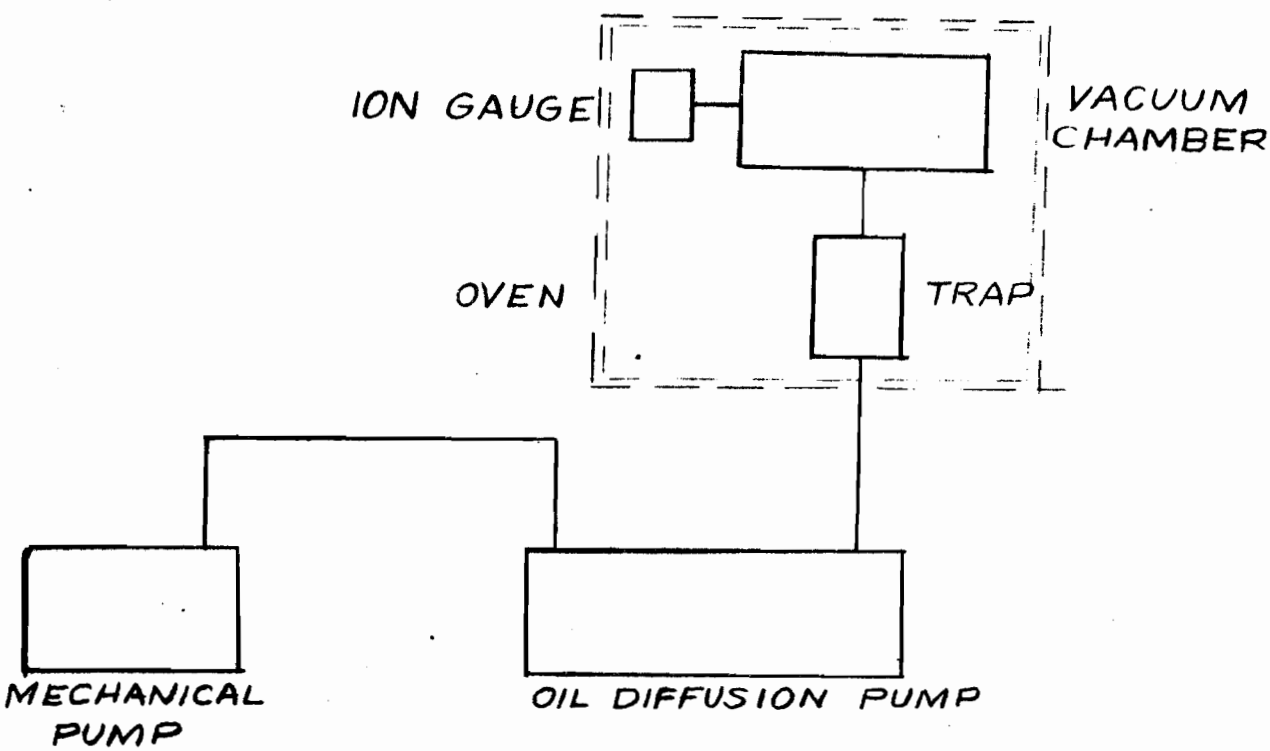

The unusual aspects and problems with the components are those to be discussed here.

In general, one must provide a system made of material which can be outgassed by baking so that the rate of evolution of gas from the wall surfaces is low. Stainless steel and glass are two excellent materials for this; aluminum and brass are excluded by this requirement. Next one must provide a means of removing contamination from the pump itself. This is the function of the trap, which may take the form of the Alpert copper trap, or a suitable cold trap. Care must be taken not to generate in the system gases which are not trapped. These gases are usually the cracked products of pump oil, and the cracking may take place either in the diffusion pump or an ion gauge. Third, one must provide a means for measuring the high vacuum. This is done with the Bayard-Alpert inverted ion gauge. The diffusion pump is usually a glass fractionating pump, but may in some circumstances be a metal pump. The mechanical pump to exhaust the diffusion pump seems to offer no special problems beyond that of compatibility of the oil with the diffusion pump oil.

Usually one is not satisfied with a system so simple as that above, but rather wants valves, demountable joints, insulators, etc., all of which add complications. Below we will try to deal with these problems as well as give more details on the basic components.

BAKING

The vacuum systems are usually baked with the diffusion pump on for about 50 hours at 450°C. Above this temperature glass starts to soften. The part of the system that one wants to be the cleanest is kept hot longer than the other parts. The trap is usually cooled first.

Before baking, a typical figure for the outgassing of stainless steel after being pumped for several weeks is, $Q \approx 10^{-10} \frac{mm\,\ell}{sec\,cm^2}$; Grove thinks this figure may be too low. After baking the outgassing is reduced to $Q \approx 5 \times 10^{-15} \frac{mm\,\ell}{sec\,cm^2}$. The systems are usually baked for 20 hours at a time (overnight). Typical figures for a system are; after 20 hours P = 2×10^{-9} mm, after 40 hours P = 8×10^{-10} mm; after 60 hours P = 2×10^{-10} mm, and further baking makes essentially no difference.

COPPER TRAPS

The effectiveness of copper at ambient room temperatures as a trap for back-streaming diffusion pump oil was first discovered and used by Alpert. The copper surfaces are formed to provide a very large number of cylinderical, or spiral, conductance paths. Each cylindrical path is 6 inches long and has an equivalent radius of approximately .020 to .025 inches. These traps have been made with and without end baffles that make the traps optically opaque. Grove said they have been unable to detect any difference in operation between the two models. A opaque trap of spiral conductive paths is being developed at Matterhorn.

The copper trap is effective in collecting Octoil and Octoil-S as it diffuses from a glass pump. Cracked oils do penetrate the trap. Grove feels a certain amount of oil cracking takes place in metal pumps. Copper at temperatures in excess of 200°C is not effective in stopping oil. Special care must be exercised during the cooling portion of the bake-out to make certain all of the copper in the trap is cooled before the remainder of the system. When a four inch diameter trap is used with a Consolidated Vacuum Corp. glass pump No. GF20W its useful life is approximately 50 days. The

saturation of the trap appears to progress away from the pump. The cutoff is relatively sharp (from maximum to minimum usefulness in a few days). The trap can be reactivated by again baking. For a continuously pumped system which is to operate for longer periods it is necessary to use paralleled, valved traps that can be baked in place.

A four inch Alpert trap has a pumping speed of approximately 4 to 7 liters per second. A one inch trap has speed in the order of 1 liter or less per second.

Construction: The Alpert copper trap is constructed as follows: .003" x 6" OFHC copper strip is passed to meshing 48 pitch spur gear stock to form corrugations. Backing rolls on spring loaded bearings are necessary to keep gear stock deflection low. This corrugated stock is laid flat against .003"x6" OFHC copper strip and the two rolled in a tight spiral to a diameter equal to the inside diameter of the body of the trap. Spiders hold the copper bundle away from the end flanges. In small glass traps with tapered transitions from trap diameter to connecting tubing no spiders are necessary. Traps may be designed to have a baffle over the connection openings.

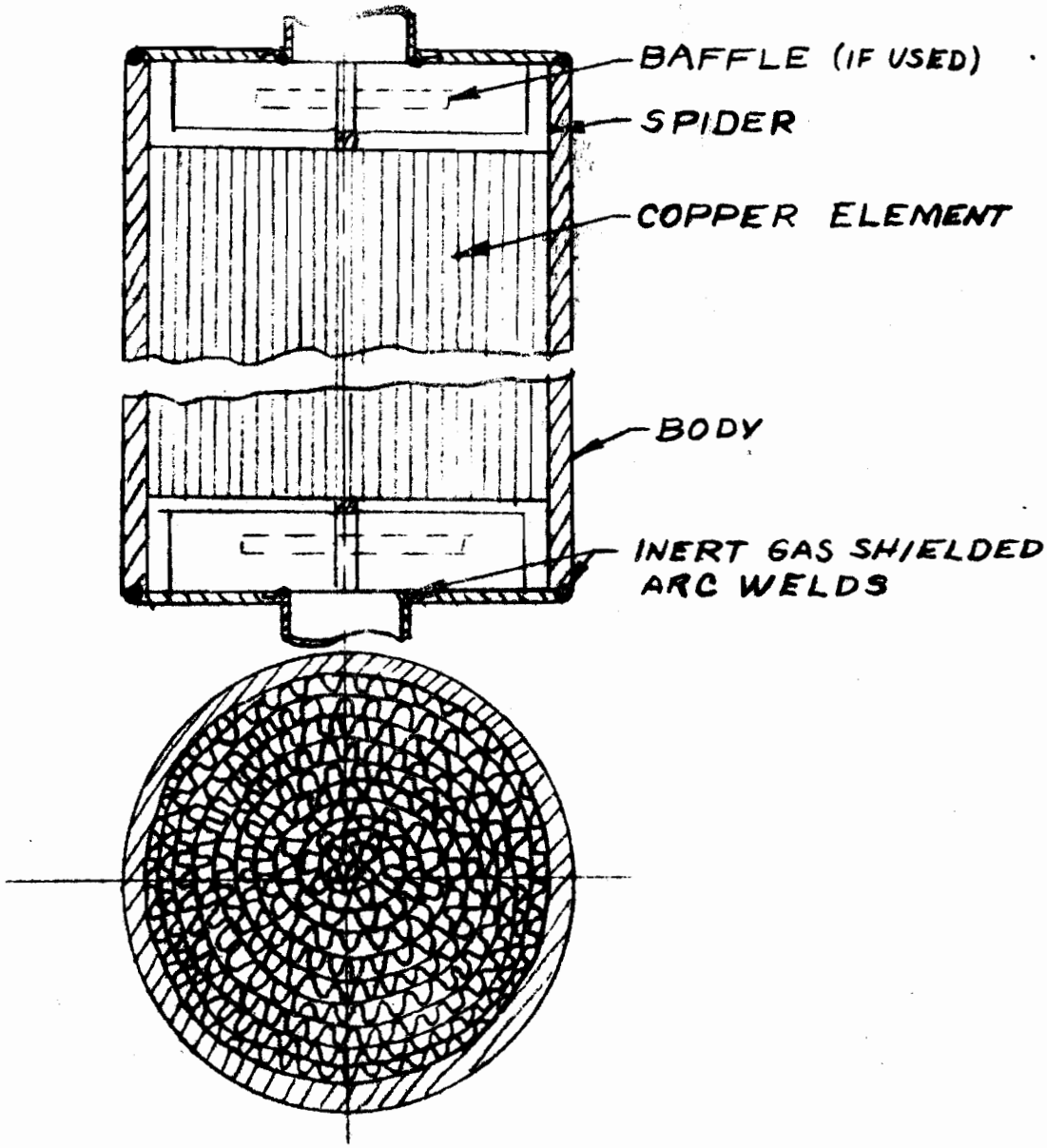

The trap is assembled, washed with solvents, vapor degreased, and vacuum baked before being assembled in the system.

A "Copper Foil Trap" is now available from Consolidated Electrodynamics Corporation, Rochester division. It is in a glass envelope and sells for $25 F.O.B. Rochester, N.Y. This is the original Alpert design. It is said to have an overall speed equal to a 1 centimeter diameter by 6' long tube.

DIFFUSION PUMPS

The pump usually used is a GF-20W glass fractionating pump, with Octoil-S, in conjunction with an Alpert copper trap. The

choice of Octoil-S rather than Octoil is made on the basis of the lower vapor pressure of Octoil-S. Glass pumps apparently do not crack the pump oil. This system typically has several liters/sec pumping speed.

MCF-300 metal fractionating pumps together with double liquid nitrogen traps, have been used to obtain vacua of the order of 2×10^{-10} mm on baked systems. Octoil is used in these systems. Metal pumps crack the pump oil and give derivatives which are not trapped in the copper, hence the severe cold trap requirements. Such systems have typically 7 liter/sec speed, so this is a small gain over the glass pump-copper trap system.

ION GAUGES

The measurement of pressures below 10^{-8} mm Hg was achieved with the advent of the Bayard-Alpert inverted ion gauge. In conventional ion gauges, such as the VG-1A, the lowest pressure measureable is that pressure which gives an ion current at the collector which roughly is equal to the photo emission electron current arising from x-rays produced by electron bombardment of the grid. This pressure is typically 10^{-8} mm Hg.

In the Bayard-Alpert gauge the x-ray problem is postponed by making the collector a very fine wire in the center of the structure. This collector intercepts relatively few x-rays, so that pressures as low as 4 to 8×10^{-11} mm Hg can be measured. The gauge is rather efficient. The sensitivity, usually defined $S = \frac{i_c}{i_g P}$ is about 50% that of a VG-1A. (A typical value is $S = \frac{100 \mu amp}{10^{-3} \mu 10 ma} = \frac{10}{mm Hg}$. The filament current grid voltage and grid current are about the same as in an ordinary gauge.

The Bayard-Alpert gauge can be obtained commercially from Westinghouse and Veeco. Control circuits for the Veeco gauge are

also available from Veeco. Consolidated Electrodynamics will soon market a control circuit for the Westinghouse gauge. The Veeco gauge has the advantage of an iridium filament which gives it burn-out protection, even at atmospheric pressure, but it has a larger collector and hence a higher x-ray limit. The operating point of these tubes is quite similar to that of the conventional ion gauge; one could think of "beefing up" the amplifier on his conventional ion gauge control circuit and using it with the Bayard-Alpert gauge.

Valves

The desirable properties of a high vacuum valve are (1) high open conductance (2) low closed conductance and (3) bakeability. Three valves exist which satisfy (3). Their properties (1) and (2) are given below.

VALVE	OPEN CONDUCTANCE	CLOSED CONDUCTANCE
"MIT"	3 to 5 ℓ/sec	10^{-8} or 10^{-9} ℓ/sec
Granville-Phillips	1 ℓ/sec	10^{-10} to 10^{-11} ℓ/sec
Westinghouse	0.3 ℓ/sec	10^{-10} to 10^{-11} ℓ/sec

The "MIT" valve is available from John B. Keefe, 164 School St., Islington, Massachusetts. The Granville-Phillips valve, described in a recent RSI, is available from the Granville-Phillips Company. The Westinghouse valve is now available from Consolidated Electrodynamics.

DEMOUNTABLE JOINTS

Matterhorn has developed demountable joints that can withstand many baking cycles from room temperature to 450°C and back to room temperature. Basically the joint consists of two mating flanges and a continuous ring gold gasket. The flanges are made of stainless steel alloy No. 305. This alloy was chosen for relative low

permeability (1.003 to 1.070), good weldability, good corrosion resistance at baking temperatures (450°C), good cold forming, and relative low cost. The eflux of gas from baked and unbaked 305 stainless steel has been measured. Other high temperature corrosion resistant materials are believed to be satisfactory; for example 310 stainless steel and inconel. A.O. Smith, producer of glass lined products says inconel gasses at glass bonding temperatures. 24K. gold wire is welded into continuous rings for gaskets. Gold is used because of high temperature corrosion resistance, low flow at high temperatures, high salvage value ($32 per troy ounce. .020" dia. wire costs $39 per troy ounce), weldability, and "it works". Joints of this kind have been made both round and elongated. All have heavy metal flanges as compared to opening to hold tolerance and allow medium force bolting (300 lbs per inch of gold gasket, estimated). The joint design is shown in the following sketch:

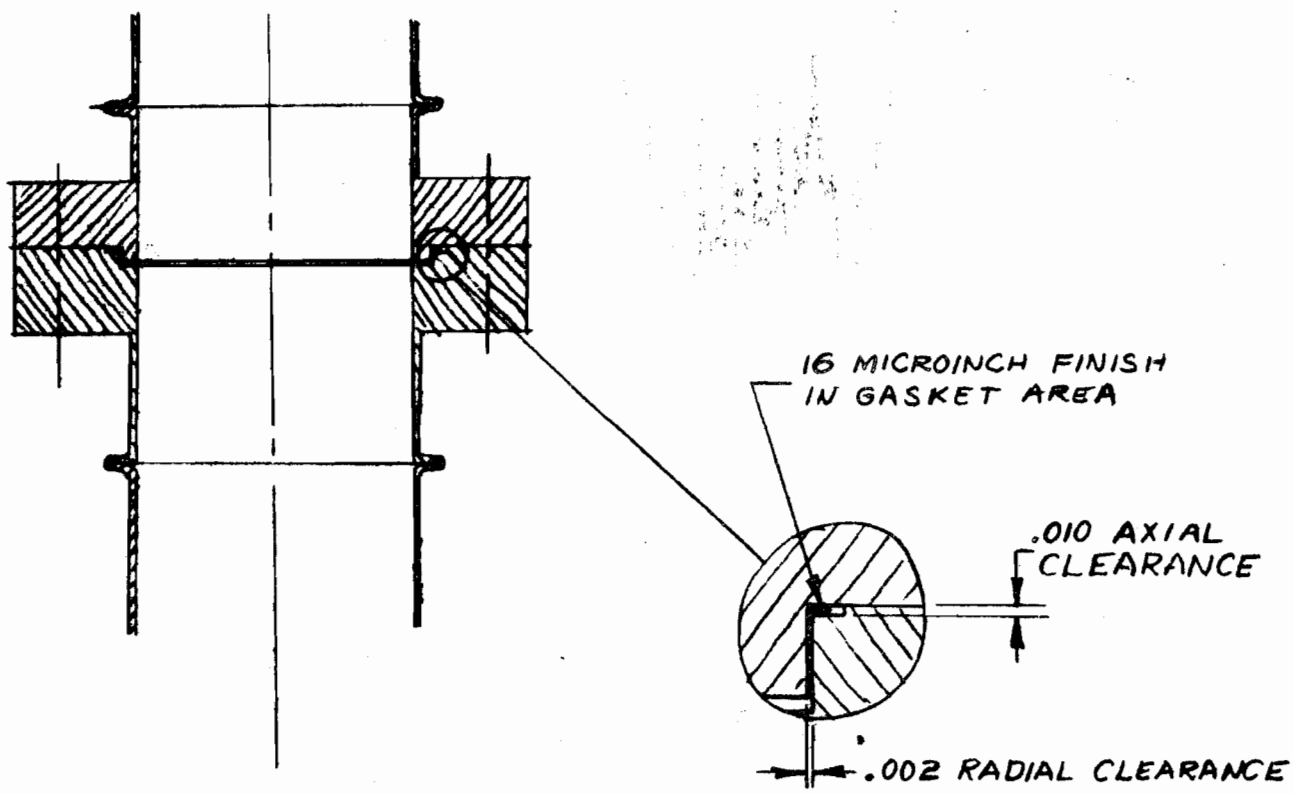

Gold flows down into the .002 radial clearance and holds the two flanges together. After baking the bolts may (for no good reason) be removed and the joint remains intact and vacuum tight.

The gasket is made by cutting .020" diameter 24K. gold to a length equal to the gasket circumference. The ends are butted together and held in a jig, as shown below.

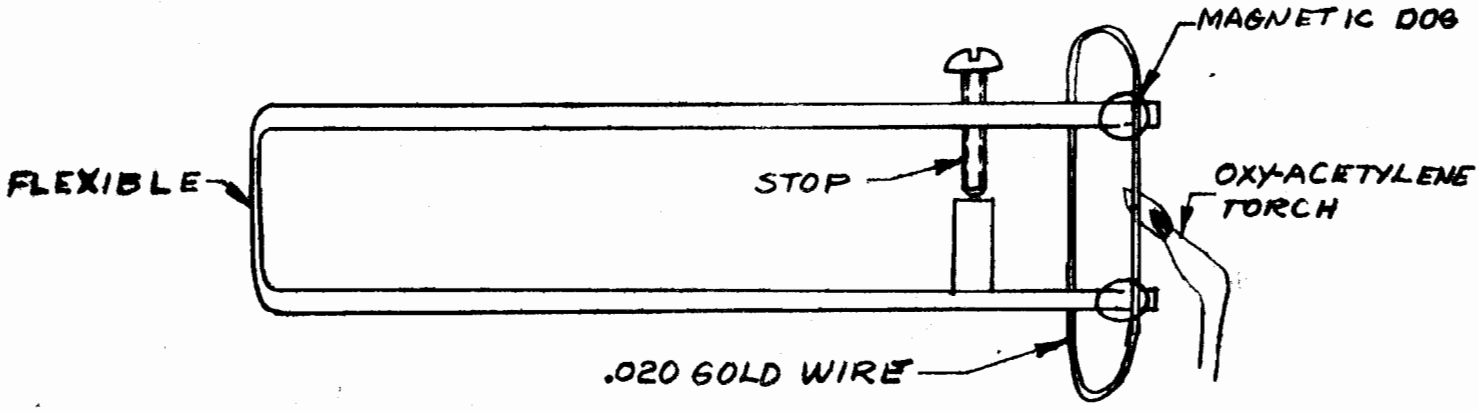

The jig is held between the thumb and fore finger of one hand and the torch in the other. A neutral oxy-acetylene flame is delicately played on the joint until both ends melt. Light force on the jig compresses the joint until the jig hits its stop. As soon as the joint is fused the flame and compression on the jig are removed. The fused joint which was upset by the jig compression is now stretched while it cools. A properly made joint has a diameter approximately equal to the wire with a minimum of flaws. The ring is then air annealed (red heat) with low temperature torch flame and sized by stretching over a tapered sizing plug which can be made to work as a gasket installation jig. See sketch on next page.

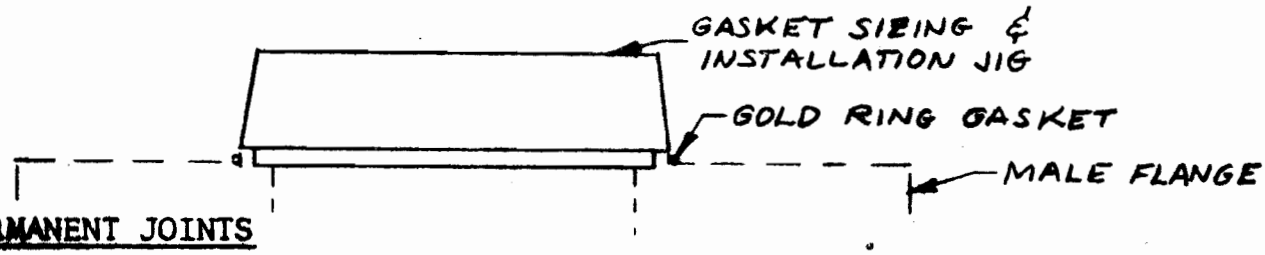

PERMANENT JOINTS

A) Welded joints: All ultra high vacuum welded joints made at Matterhorn are by the argon gas shielded thoriated-tungsten arc (Heliarc, etc.) process. Joints in tubing & tubing-to-flanges are prepared to make the most favorable welding conditions. Wherever possible welds are made by melting together the parts to be fused. Filler material, #310 stainless steel, is used only where additional joint buildup is required for strength. Both manual. & semi-automatic procedures are used. Both are highly successful.

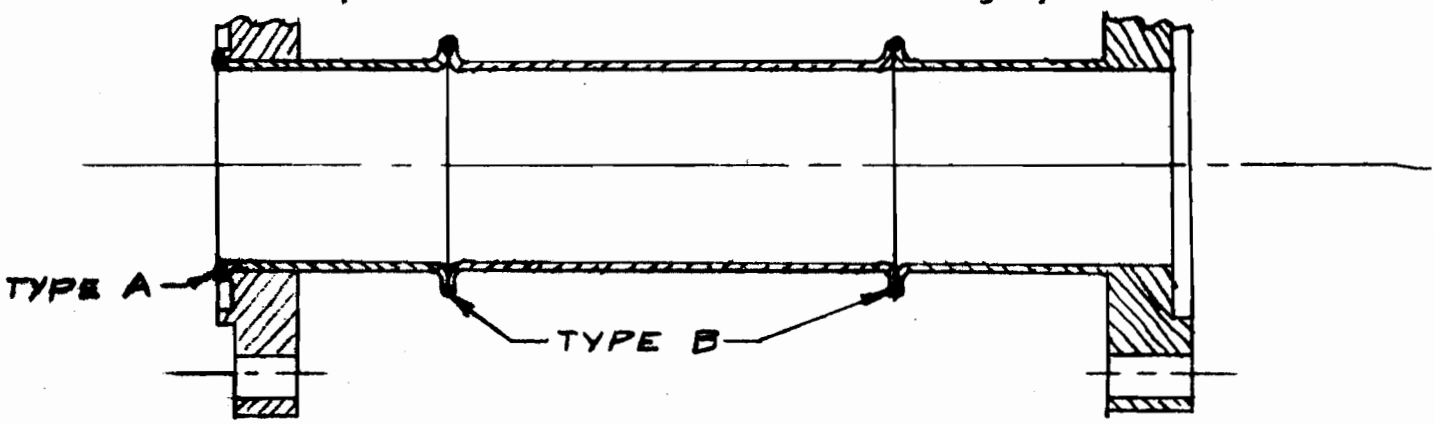

TYPICAL WELDED JOINTS

Joints shown in the above sketch require no filler material added to the joint. No leaks have been found in either type joint shown here as types A & B. Hundreds of type B joints have been made. Tens of type A have been made. For weld type B tubing ends are cold formed by hand with a screw as shown in the sketch below. Mating parts on flanges are turned on the flange stock to match flared tubing in thickness and diameters.

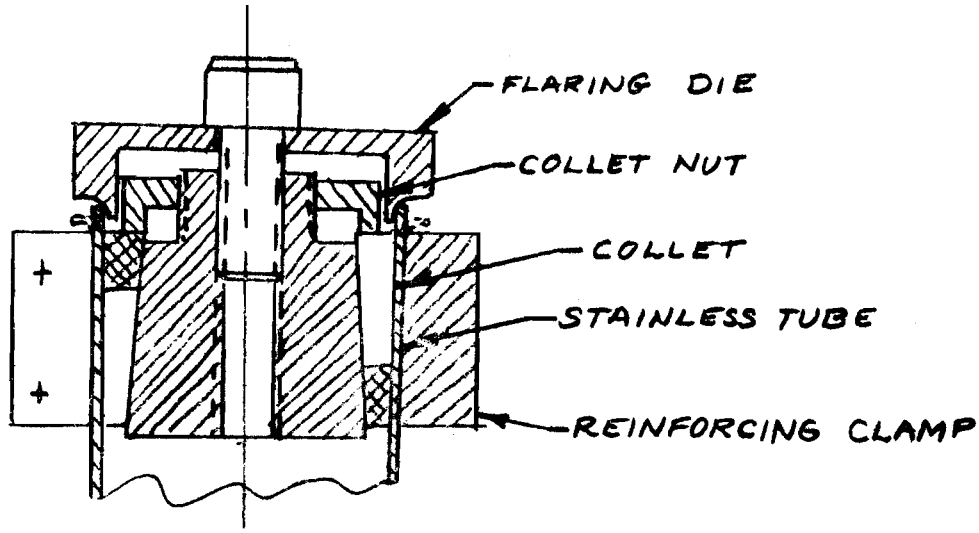

b) Glass-to-metal joints: Standard techniques in glass-to-Kovar and certain magnetic stainless steels give tight, bakeable joints. Attempts were made to make glass-to-305 stainless steel joints. Only one of several survived the production process. No attempt has been made to utilize this joint in a system as it is feared to be under too much strain to hold up. It should be noted that Kovar has a high permeability - as high as 3700 at 700 gauss. Kovar welds well to stainless steel.

c) Ceramic-to-metal joints: Matterhorn has samples of two ceramic-to-metal seals. Both have approximately 1 3/4 inches inside diameter. Both have magnetic metal bonded to the ceramic.

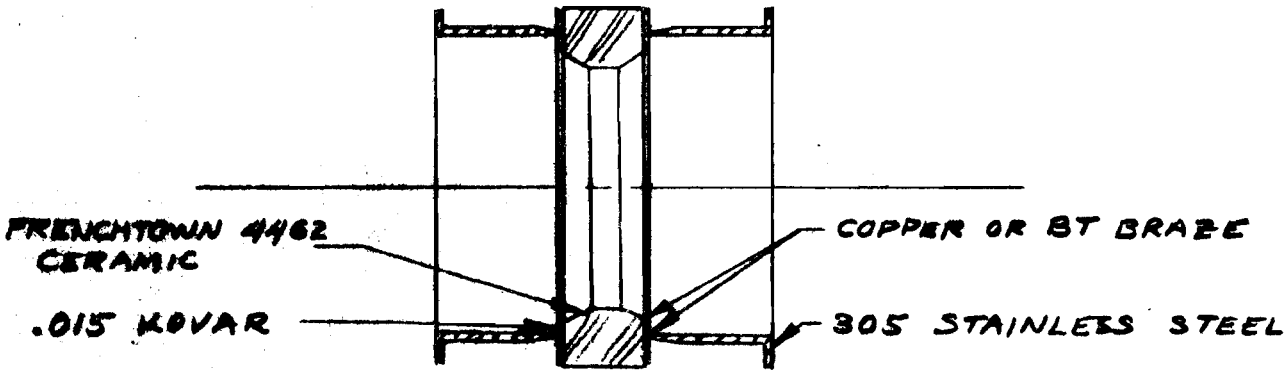

RCA CERAMIC-TO-METAL SEAL

The RCA seal, see sketch, when welded into a system and tested to destruction in bending, failed by the Kovar pulling free of the ceramic.

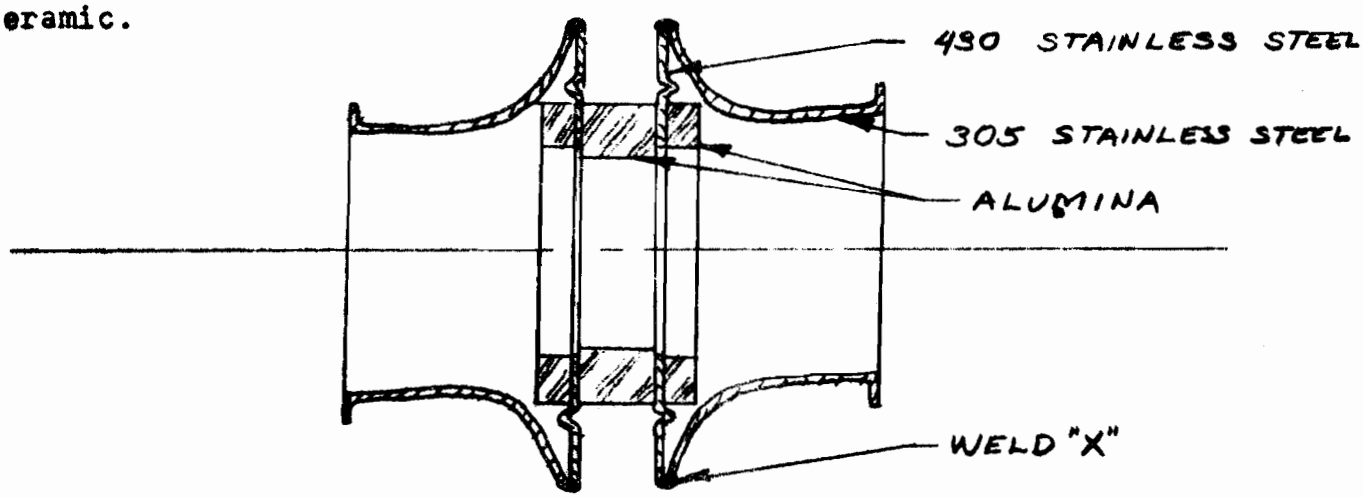

GE CERAMIC-TO-METAL SEAL

This GE ceramic-metal assembly is remarkably strong in bending. When the ends were welded to tubing and bent to destruction one of the welds indicated by "X" parted after the 430 stainless has bent sharply along the ceramic. Matterhorn is attempting to obtain larger units (6"-8"dia.)

d) Bellows: Stainless steel (316, 321) as manufactured by "Flexonics" have been used by Matterhorn. The bellows are of .005 to .008 thickness by 1 3/4 I.D. and are of welded seam construction. It is most desirable to have the manufacturer resistance weld special end fittings to the bellows for systems which are to be baked. Fusion welding or silver brazing thin bellows material to heavier tube walls is not satisfactory because it is difficult to keep from over heating the thinner material. Matterhorn uses the bellows arrangement shown in the following sketch.

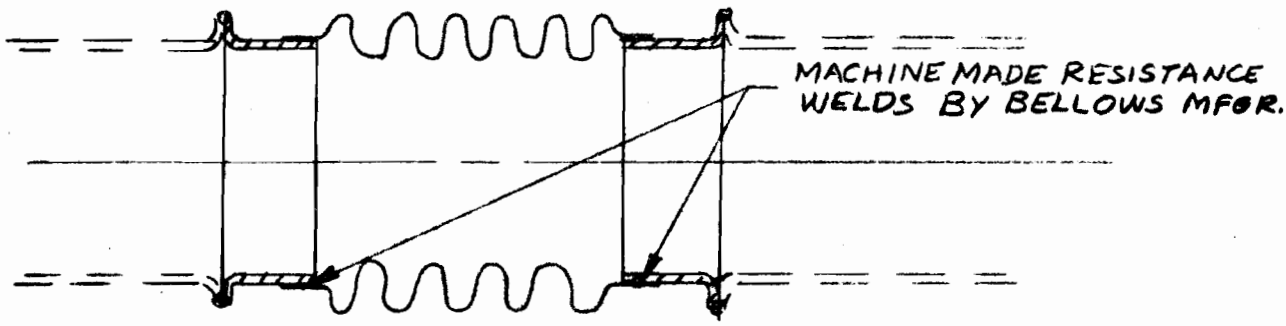

LEAKS

The problem of leaks in the systems described here are the same as any other system; there are bound to be some. Several special problems arise because of the baking. Stainless steel bar stock will often have "pipes" in it. Thus it is best not to make flanges out of bar stock, but rather it is better to machine them out of flat stock. Sometimes small leaks will appear in stainless steel after baking; these can be sealed by merely touching the area with one's fingers. No amount of solvent or vapor degressing will open them up, but baking will open them again. Thus it is advisable to wear clean gloves while handling untested pieces. These leaks can be sealed by heating with a heli-arc torch and prodding the area with a pointed 310 welding rod.

ESTIMATE OF A PUMPING SYSTEM FOR AN FFAG MODEL

Consider a vacuum chamber which is an annulus of OD 2 meters, ID 1 meter and height 7 centimeters. The area of the system is $A \approx 5\times10^{4}\ cm^{2}$. After baking the efflux of gas from the walls will be $Q \approx 5\times10^{-15}\ \frac{mm\,\ell}{sec\ cm^2}$ so the total rate of gas revolution will be $q \approx 2.5\times10^{-10}\ \frac{mm\,\ell}{sec}$. If we provide one liter per second pumping the ultimate vacuum without leaks will be 2.5×10^{-10} mm Hg. The volume of the system is 330 liters, so that the 1/e pumping time will be of order 5 minutes.

Several special features provide some difficulty. The most salient problem is to provide non-magnetic insulated, accelerating

gaps for betatron and RF acceleration. Several ceramic seals exist which have good vacuum and mechanical properties but are rather magnetic. The problem is in matching the thermal expansion coefficient of the ceramic to that of a bakeable non-magnetic metal. One might conceivably extend the seal beyond the magnets to avoid this problem.

Special probes, windows, etc., do not seem to be too difficult with already known methods.

The injector must also be bakeable, or else provision must be made for differential pumping. The use of a commercial high vacuum extended anode x-ray tube, such as the Machlett EG 300, would solve this problem, for these tubes are baked at 450°C in construction.

Bibliography of some pertinent papers

Subject	Author	Reference
Review	Alpert	JAP 24 860 (1953)
New Gauge	Bayard & Alpert	RSI 21 571 (1950)
Valve	Alpert	RSI 22 536 (1951)
Measurements & Production	Alpert	JAP 24 860 (1953)
Copper Trap	Alpert	RSI 24 1004 (1953)
Technology	Alpert	Scientific Paper #60-94436-4-P1, Westinghouse Research Lab E. Pittsburgh, Pa.
Ultimate Vacuum in Ion Gauge	Varnerin & White	JAP 25 1207 (1954)
Experiments	Biondi	RSI 22 535 (1951)
Experiments	Alpert	Sc. Paper #60-994436-4-P4, Westinghouse Research Lab E. Pittsburgh, Pa.