Fermilab Library
0 1160 0038533 0

220

MIDWESTERN UNIVERSITIES RESEARCH ASSOCIATION

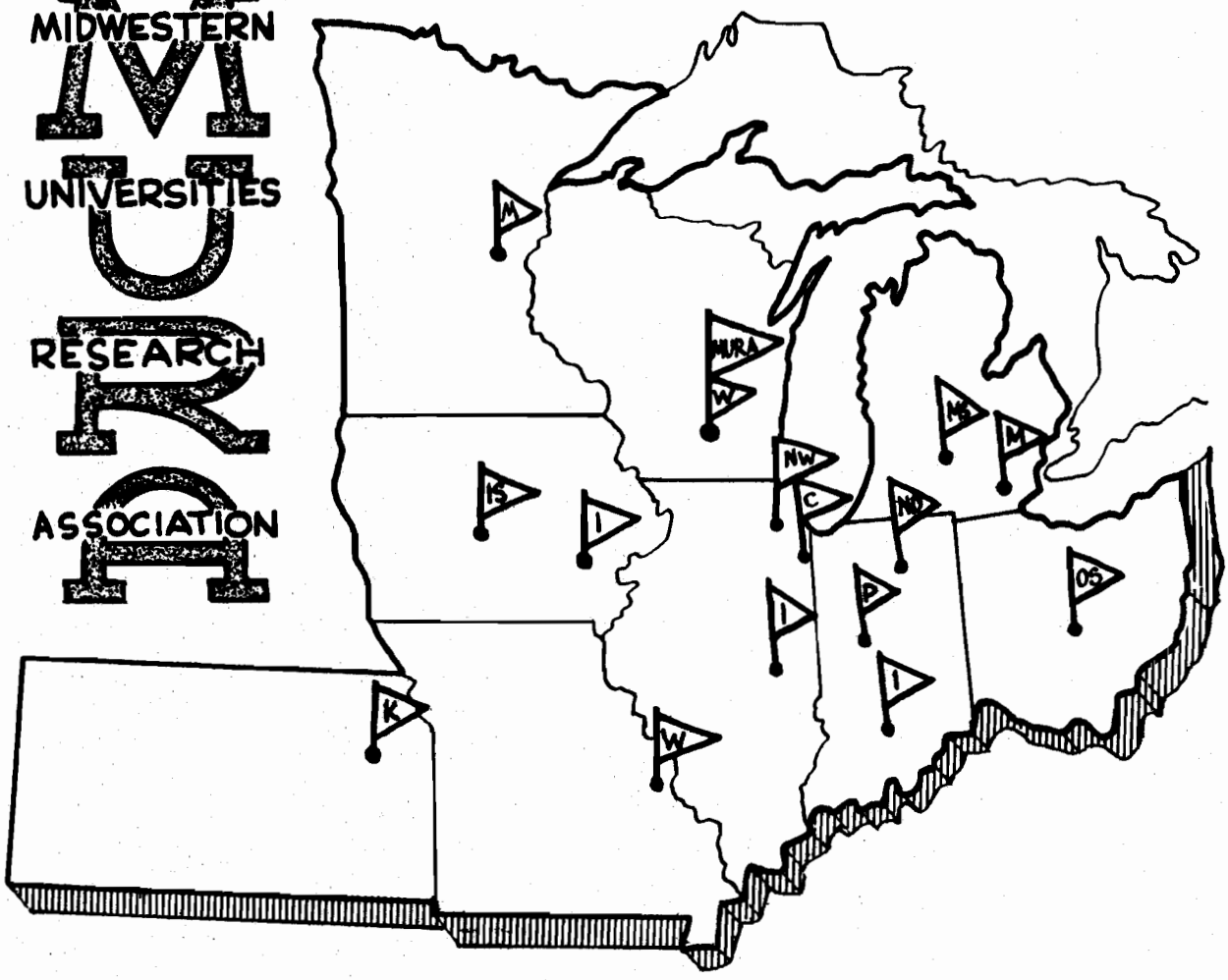

ROUGH CALCULATIONS ON FLANGE-COUPLED CAVITIES

REPORT **NUMBER** 220

MURA-220
Internal

MIDWESTERN UNIVERSITIES RESEARCH ASSOCIATION*

ROUGH CALCULATIONS ON FLANGE-COUPLED CAVITIES

J. Van Bladel

March 11, 1957

ABSTRACT:

The resonant frequencies of ferrite rings, coupled to the vacuum chamber by two plane flanges, are roughly calculated. The constancy of the voltage throughout the chamber is investigated.

* Supported by Contract AEC #AT(11-1)-384

1. Position of the problem.

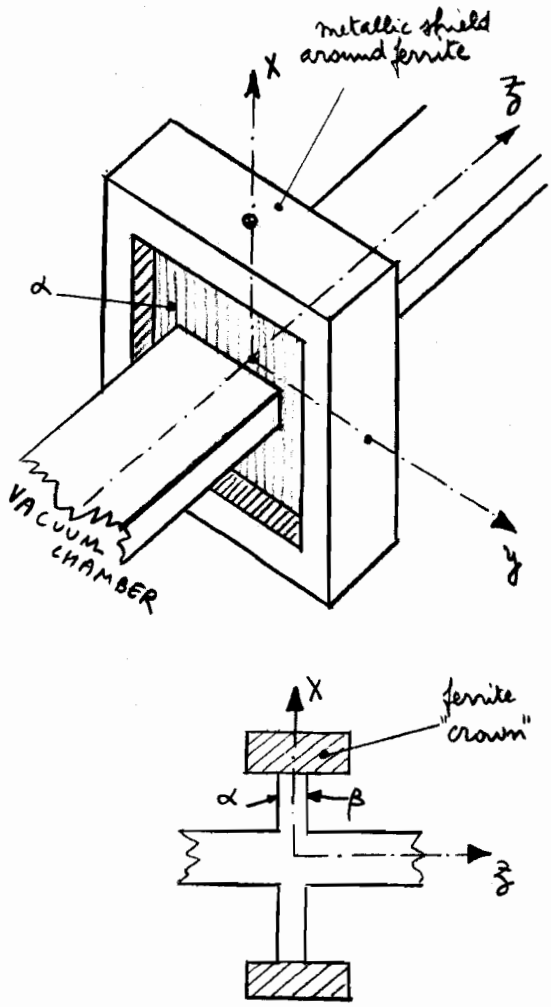

Fig. 1

The presence of D.C. magnets* close to the vacuum chamber, and the small spacing available between successive magnets (of the order of 10 cm), makes it impossible to "wrap" a ferrite-loaded cavity right around the rectangular vacuum chamber. The idea has been advanced that it might be possible to surround the chamber by a ferrite "crown" coupled to the accelerator by two parallel metallic flanges α and β.** A number of questions immediately arise:

1. Will the field excited in the ferrite penetrate into the vacuum chamber, or will the flanges act as a "wave-guide under cut-off"?
2. How do the resonant frequencies of the coupled cavity depend on various dimensional parameters, such as the spacing between flanges?
3. Is there a cavity mode for which the beam accelerating voltage is essentially independent of the position of the beam in the chamber, i.e. independent of x and y throughout the tube cross-section? The present report endeavors to answer these questions in a semi-quantitative fashion.

---

* Not represented on Fig. 1., for reasons of clarity.

**No ferrite should be introduced between α and β, because of the presence of undesirable D.C. saturating fields in that region.

2. Loading by the vacuum chamber.

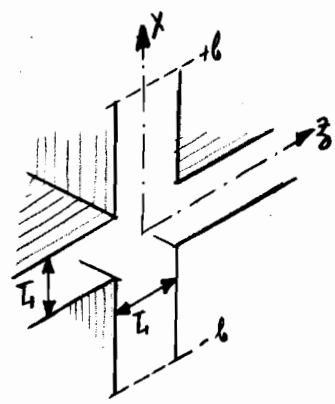

Fig. 2

The following simplified problem will be solved: the vacuum chamber is supposed to be infinitely wide (planes $x = \pm L/2$), as well as the coupling flanges (planes $z = \pm L/2$). A voltage $v \cos \omega t$ is impressed across the flanges at $x = \pm b$. How much voltage will still be found at the chamber input (i.e. $z = \pm L/2$), and how much will, so to speak, penetrate into the chamber?

A rigorous solution would consist of taking the z component of the electric field at $x = \pm L/2$ as an unknown. This involves an integral equation, the solution of which would be quite heavy. One may hope that the actual detailed distribution of E_z throughout the input gap $x = \pm L/2$ is not very important, the operating wave-length being much larger than the gap opening. In accordance with that idea, E_z has been taken as a constant $\frac{V' \cos \omega t}{L}$ throughout the gap. One then finds that the magnetic field H_y, on the chamber side of the gap, is a function of z. The magnitude of H_y, averaged over the gap, is $\frac{5.2\,\varepsilon_0}{\pi^2}\,\omega V'$. The average input impedance of the chamber can then be written as:

$$|Z| = \left|\frac{E}{H\omega}\right| = \frac{V'/L}{\frac{5.2\,\varepsilon_0}{\pi^2}\,\omega V'} = \frac{\pi^2}{5.2\,\varepsilon_0\,\omega L}$$

This impedance would be the same if a capacitance of value $\frac{5.2\,\varepsilon_0}{\pi^2}$ per unit depth (along the y axis) were hung at the gap. This capacitance, by the way, is equivalent to an extra length of flanges equal to 0.53 L. For all practical purposes, then, the following conclusion seems to be valid:

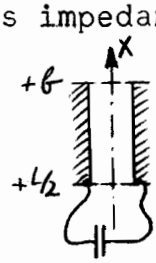

Fig. 3

The distribution of voltage along the flanges is the same, between $x = L/2$ and $x = b$, as if the vacuum chamber were removed, and replaced by metallic walls placed at $z = \pm L/2$. This conclusion will be boldly extrapolated to other physical situations, such as cavities of finite width, and <u>the flanges will, from now on, be considered as continuous metallic walls</u>.

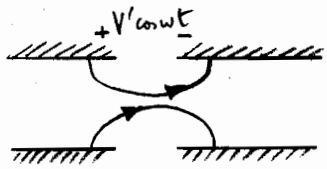

Fig. 4

It will be shown, in a forthcoming report, that, if a voltage V' cos wt is applied across the gap of a rectangular vacuum chamber, the voltage to which particles are being subjected, i.e. $\int_{-\infty}^{+\infty} E_z \, dz$, is practically equal to V' cos wt, the difference becoming noticeable only when the cross-section is nearly square, and the frequency comes close to the cut-off frequency of the guide. From now on, then, we shall assume that <u>the beam voltage, at any (x, y) position, is equal to the voltage which exists between the extended coupling flanges at that point</u>.

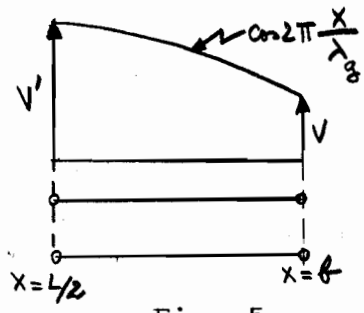

Fig. 5

The voltage along the flanges can be shown to have an open transmission line variation, such as is depicted on Fig. 5. The same sort of variation will be found in the resonant cavities to be studied next.

3. <u>Infinitely wide ferrite-loaded cavity</u>.

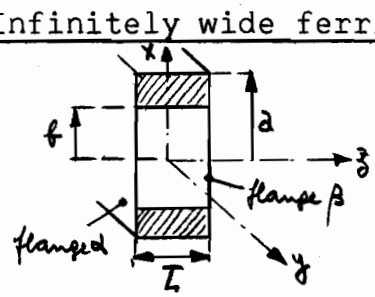

Fig. 6

One wants to investigate whether there exists a resonant mode such that the voltage between flanges, already independent of y, is also practically independent of x in the

air-filled region, i.e. for $-b < x < +b$. Such a mode does exist. Its field components are independent of z. $\overline{E}$ has only an axial component E_z and $\overline{H}$ has only an H_y component. The resonant wave length λ_0 has been found to take the following values in four representative cases:

TABLE I

b/a \ K_m	9	36
0.6	$\lambda =$ 16.8a	33.5a
0.8	10.4a	20.4a

The dielectric constant of the ferrite has been taken equal to 9, and two representative values of the magnetic permeability K_m have been chosen. Sample calculation: for modulation from 20 to 40 Mc/s, the dimensions of the cavity would be a = 0.44 m, b = 0.26 m or a = 0.73 m and b = 0.53 m. The variation of the fields is plotted in Fig. 7 for K_m = 36 and b = 0.8a. One notices the excellent constancy of E_z, down to only 0.97 at the ferrite boundary (x = 0.8a). Interest exists for finding where the electric energy is being stored. Calculation of $1/2\int \varepsilon E^2 d\tau$ shows that, for K_m = 36 and b = 0.8a, (and per unit depth along the y axis) $0.784\, \varepsilon_0 a L (E_z \text{ center})^2$ is stored in the vacuum.

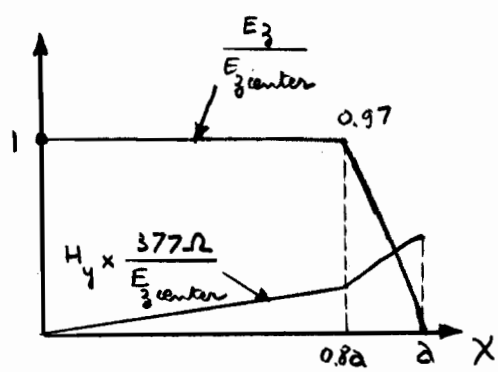

Fig. 7

$0.675\, \varepsilon_0 a L (E_z \text{center})^2$ is stored in the ferrite.

The relatively high dielectric constant of the ferrite allows the

ferrite-filled region to have practically as much capacity as the vacuum part of the cavity.

4. Circular ferrite-loaded cavity.

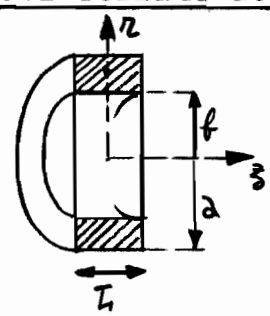

Fig. 8

Similar calculations have been carried out for the circular cavity of Fig. 8. The resonant mode of interest has a purely axial electric field E_z, and a purely tangential magnetic field H_φ. Both components are independent of z and azimuth φ. A table of resonant wavelengths reads as follows:

TABLE II

b/a \ K_m	9	36
0.6	$\lambda =$ 14a	28a
0.8	8.4a	16.5a

Sample calculation, for modulation from 20 to 40 Mc/s: a = 0.54m, b = 0.32 m or a = 0.91 m, b = 0.73 m. The electrostatic energy is stored at the rate of

$$\varepsilon_0 \, a^2 L \, (E_z \text{ center})^2 \text{ in vacuo}$$
$$2\varepsilon_0 \, a^2 L \, (E_z \text{ center})^2 \text{ in ferrite}$$

the parameters being, again, K_m = 36 and 0.8a. Most of the energy is stored in the ferrite in the present configuration, a result which could have been foreseen because of the proportionally higher volume occupied by the ferrite as compared with the preceding configuration. Some interest is attached to the knowledge of the maximum RF amplitude of the magnetic field. This maximum is experienced at the outer metallic boundary. A sample value: for a = 0.91 m, b = 0.73 m,

L = 0.1m, and an RF voltage of 1000 V at the center of the cavity, one finds a maximum field of 12 A/m (i.e. 0.15 oersted) when the cavity resonates at 20 Mc/s.

The relative variation of E and H as one proceeds from the center of the cavity toward the outer edge is practically undistinguishable from the variation depicted on Fig. 7. One then feels that a smooth transition could be established between circular and straight cavities, in the spirit of Fig. 9, and that a structure of that nature would admit of a resonant mode:

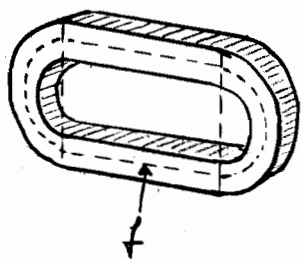

Fig. 9

(a) with resonant wavelength intermediate between the values given in Table I and Table II.

(b) with practically constant voltage in the vacuum region.

(c) with field values practically independent of the position along a "fiber" f(See Fig. 9).

5. <u>Infinitely-wide cavities with T-shaped cross-section</u>.

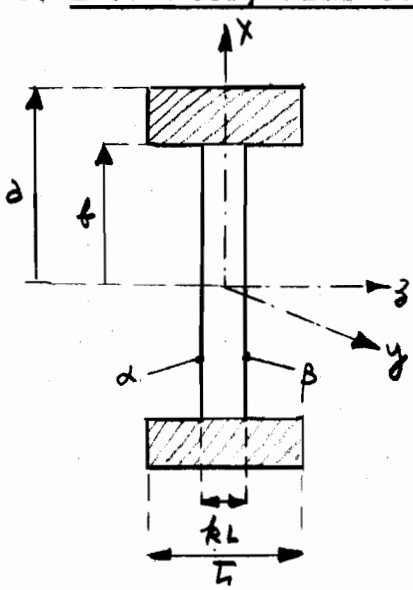

Fig. 10.

One might want to know what happens to the resonant frequency of the cavity depicted in Fig. 6 when the vacuum region is made narrower and narrower. The capacity between the flanges α and β becomes larger and larger, and one would expect the resonant frequency to decrease. Exact calculations of resonant frequency and field configuration are difficult. The following approximation* gives acceptable

---

* An approximation of the same kind has been used by W. W. Hansen in the computation of eigen frequencies of klystron cavities (J. Appl. Phys. 1948)

results, and involves easier, but still heavy, computations. One assumes E_z to be independent of z along the ferrite-vacuum boundary, a property which was true for the lowest resonant mode of the cavity in Fig. 6. One computes the tangential component H_y of the magnetic field excited by E_z (a) in the ferrite (b) in the vacuum region. These two values of H_y depend on z and on the frequency. We shall say that the sought resonant frequency is the lowest frequency for which the fields match at the center of the boundary, i.e. H_y is continuous at $z = 0$, $x = b$.

Actual computations are lengthy, and will not be reproduced here. They involve the use of the Green's dyadic relative to the ferrite region. Let the following numerical examples be quoted. For $K_m = 36$, $b = 0.8a$, the resonant wave-length, for the cavity of Fig. 6, (which corresponds to $k = 1$) was found to be 20.4a. Let the width of the cavity be $L = 0.2a$ (square ferrite cross-section). Then:

for $k = 2/3$ (see Fig. 10) λ becomes 25.2a, i.e. the resonant frequency is reduced by a factor of 0.81

for $k = 1/3$, λ is 34a, the reduction factor being 0.602.

These numerical values allow us to roughly investigate the following problem: given a certain resonant wavelength $\lambda = 36\,b$, and internal clearances b and $kL = \frac{b}{8}$ (See Fig. 11), which one of the configurations herenext will require the least amount of ferrite?

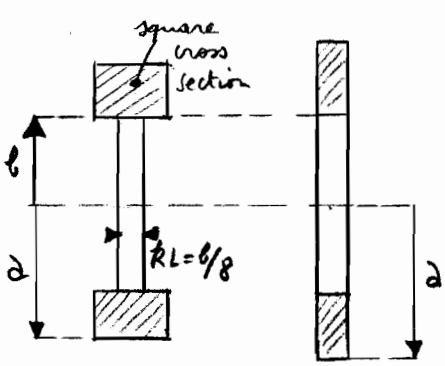

A B Fig. 11

<u>Configuration A</u>: $0.125\,b^2$ per unit depth ($a = 1.25\,b$)

<u>Configuration B</u>: $0.100\,b^2$ per unit depth ($a = 1.4\,b$)

Configuration B is slightly better as far as volume is concerned. Impedance considerations, however, might make A more attractive.

Results of the same nature are expected for a circular T-shaped cavity. The narrowing of the vacuum space should, however, have less influence on the resonant frequency, more of the capacitive energy being stored in the ferrite for that particular configuration.