Fermilab Library
0 1160 0038517 3

MURA-203

MIDWESTERN UNIVERSITIES RESEARCH ASSOCIATION +

MISALIGNMENTS IN THE MICHIGAN RADIAL SECTOR FFAG ACCELERATOR

F. T. Cole*, L. W. Jones**, C. H. Pruett and K. M. Terwilliger**

November 5, 1956

ABSTRACT: Experiments and calculations are described which test the effects of misalignments in the Michigan radial sector FFAG betatron. In the experiments, one magnet is moved and the equilibrium orbit deviation measured. The calculations are done in the "hard-edge" approximation, where the effects of magnet edges are approximated by impulsive lenses. Agreement between theory and experiment is considered good.

+ Supported by Contract AEC #AT(11-1)-384

* On leave from the State University of Iowa

**On leave from the University of Michigan

I. Introduction.

Experiments have been performed to test the effects of misalignments in the Michigan radial sector FFAG betatron. The following is a detailed report of these experiments and calculations of the same effect. A similar problem was studied with the Brookhaven electron analogue[1]. However in our case entire field magnets were physically displaced rather than applying an impulsive electrostatic kick.

II. Theoretical Calculations

The equilibrium orbit is that orbit which is periodic with the period of the structure. With misalignments, as in the present calculations, the period of the structure is one revolution. We calculate the displacement of the equilibrium orbit from its unperturbed form in the linear approximation.

When a magnet is moved a distance Δy radially (vertically), then the initial and final radial (vertical) orbit displacements at the boundaries of this magnet y_i and y_f beome $y_i - \Delta y$ and $y_f - \Delta y$ respectively, while the derivatives y_i' and y_f' are unchanged. The transformation matrix through this magnet is also unchanged. There is a small error in this, but it does not occur in the approximation we later use.

It should be noted also that in the radial experiments, the magnet displacement and orbit displacement are measured radially from the center of the machine and not perpendicular to the equilibrium orbit which is "scalloped" even without misalignments. Since the orbit displacement is proportional

---

1. Brookhaven Report LJL-9 (Raka, Spiro, Smith, and Laslett)

to the magnet displacement in the linear approximation, the error cancels.

We call the two magnets of a sector "a" and "b" and define transformation matrices between the centers of straight sections between the magnets.

The transformation matrix for one sector

$$M_1 = M_b M_a \tag{1}$$

has the form[2]

$$M_1 = M(\sigma, \alpha, \beta) = \begin{pmatrix} \cos\sigma + \alpha \sin\sigma & \beta \sin\sigma \\ -\frac{1+\alpha^2}{\beta}\sin\sigma & \cos\sigma - \alpha\sin\sigma \end{pmatrix} \tag{2}$$

and it is well-known that

$$M_n = (M_1)^n = M(n\sigma, \alpha, \beta) \tag{3}$$

We define also the vector

$$Y_i = \begin{pmatrix} y_i \\ y_i' \end{pmatrix} \tag{4}$$

and choose i = 0 at the center of the straight section immediately after the bumped magnet. We choose b to be the displaced magnet. Then

$$Y_r = M_r Y_0 = M_a M_{N-1} Y_0 , \tag{5}$$

where N is the number of sectors per revolution and Y_r is the displacement vector at the center of the straight section immediately preceding the bumped magnet. The equilibrium orbit is then the solution of the equations which follow from (5) and

$$\begin{pmatrix} y_0 - \Delta y \\ y_0' \end{pmatrix} = M_b \begin{pmatrix} y_r - \Delta y \\ y_r' \end{pmatrix} \tag{6}$$

---

2. E. D. Courant and H. S. Snyder - Brookhaven Report EDC/HSS-1

We define the matrix elements by

$$M_i = \begin{pmatrix} a_i & b_i \\ c_i & d_i \end{pmatrix} \quad \text{with} \quad a_i d_i - b_i c_i = 1 \tag{7}$$

and the combination of (5) and (6) gives the set of linear inhomogeneous equations

$$\begin{cases} (a_N - 1)\, y_0 + b_N\, y_0' = (a_b - 1)\Delta y \\ c_N\, y_0 + (d_N - 1)\, y_0' = c_b\, \Delta y \end{cases} \tag{8}$$

Using $a_N + d_N = 2\cos N\sigma$, we find for the solution of (8)

$$\begin{cases} y_0 = \dfrac{\Delta y}{2(1-\cos N\sigma)}\,(1 + d_r - a_b - d_N) \\ y_0' = \dfrac{\Delta y}{2(1-\cos N\sigma)}\,(c_N - c_b - c_r) \end{cases} \tag{9}$$

Displacements at homologous points around the machine may be found by applying the transformation matrix M_1 to Y_0.

To find values for the matrix elements in (9) we use the "hard-edge" approximation, where magnet edges are replaced by thin lenses.[3]

We choose an orbit geometry which gives σ_x and σ_y close to those for which the experiments were performed. The matrix elements derived in this way have been found in the past to be fairly close to the real ("soft-edge") values.

We list the parameters used below in the notation of reference 3.

$N = 8$	$\frac{R_1}{\rho} = 2.58703$	$\phi_1 = 21.21^\circ$
$\beta_1 = 34.375^\circ$	$\frac{R_2}{\rho} = 2.38221$	$\phi_2 = 16.77^\circ$
$\beta_2 = 11.875^\circ$	$\theta_1 = 13.17^\circ$	
$\delta = \frac{\ell}{\rho} = 0.2$	$\theta_2 = 4.89^\circ$	$n_1 = 1.4$

---

3. MURA-FTC/DWK-1

MURA-FTC-2

TABLE I

These parameters give the following matrix elements for the magnets.

	Wide Magnet			Narrow Magnet		
	$a_w = d_w$	b_w	c_w	$a_n = d_n$	b_n	c_n
Radial Motion	-0.20531	0.59396	-1.61265	1.26050	0.66395	0.88689
Vertical Motion	1.63586	1.96428	0.85325	0.64340	0.53631	-1.09273

and the following values for transformation parameters

	$\cos\sigma$	σ	ν	α	β
Radial Motion	-0.53076	122.05°	2.712	± 0.94246	0.72254
Vertical Motion	+0.20810	77.98°	1.733	± 1.33116	2.18906

where α is positive for the radial motion and negative for the vertical motion when the wide magnet is b. Both signs change when the narrow magnet is b. (α is odd about centers of magnets in a radial sector FFAG.)

Using these numbers in (9) we calculate the following displacements at homologous points around the machine. All displacements are in units of Δ y.

TABLE II

	$\frac{y_0}{\Delta y}$	$\frac{y_1}{\Delta y}$	$\frac{y_2}{\Delta y}$	$\frac{y_3}{\Delta y}$	$\frac{y_4}{\Delta y}$	$\frac{y_5}{\Delta y}$	$\frac{y_6}{\Delta y}$	$\frac{y_7}{\Delta y}$
Wide Magnet Moved Radially	-0.304	+1.539	-1.330	-0.127	+1.465	-1.428	+0.051	+1.374
Narrow Magnet Moved Radially	+0.025	-0.268	+0.259	-0.007	-0.252	+0.274	-0.039	-0.232
Wide Magnet Moved Vertically	+0.141	-0.750	-0.453	+0.561	+0.687	-0.275	-0.801	-0.058
Narrow Magnet Moved Vertically	-1.110	+1.328	+1.663	-0.636	-1.927	-0.167	+1.858	+0.940

By Floquet's Theorem[4], the displacements lie on a sine curve of frequency ν and amplitude $A = \sqrt{y_n^2 + (\alpha y_n + \beta y_n')^2}$, which is invariant (independent of n). Values of this invariant are given in Table III below.

TABLE III

	A
Wide Magnet Moved Radially	1.6534
Narrow Magnet Moved Radially	0.3013
Wide Magnet Moved Vertically	0.8089
Narrow Magnet Moved Vertically	1.9423

These sine curves are used in the graphical comparison of theory and experiment below. The radial numerical calculations were done by H.K. Meier.

III. Experimental Procedure

Two experiments were carried out; one for radial misalignments and one for vertical misalignments. For the vertical bumps, a probe was used consisting of a number 14 wire mounted parallel to but about 1 cm off the axis of a shaft which extended radially into the tank at the center of a straight section (figure 1). The experimental frequencies, $\nu_x = 2.69$, $\nu_z = 1.77$ were very close to the values used in section II $(\nu_x = 2.71, \nu_z = 1.73)$.

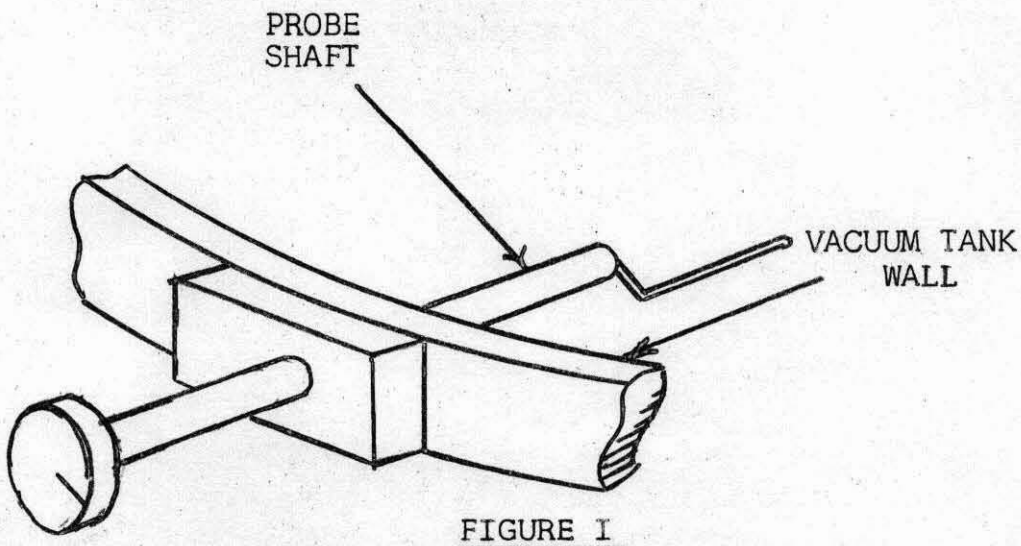

FIGURE I

4. Whittaker and Watson, Modern Analysis, p. 412

The probe could be moved radially to detect the beam at different energies and by rotating the probe the vertical position of the beam could be found. This was done by observing the x-ray yield versus angular rotation of the probe with a scintillation counter placed either near the probe or near a fixed broad target at a different azimuth and at a radius slightly greater than that of the probe tip. A typical intensity versus probe vertical position for the two detector positions is given in figure 2.

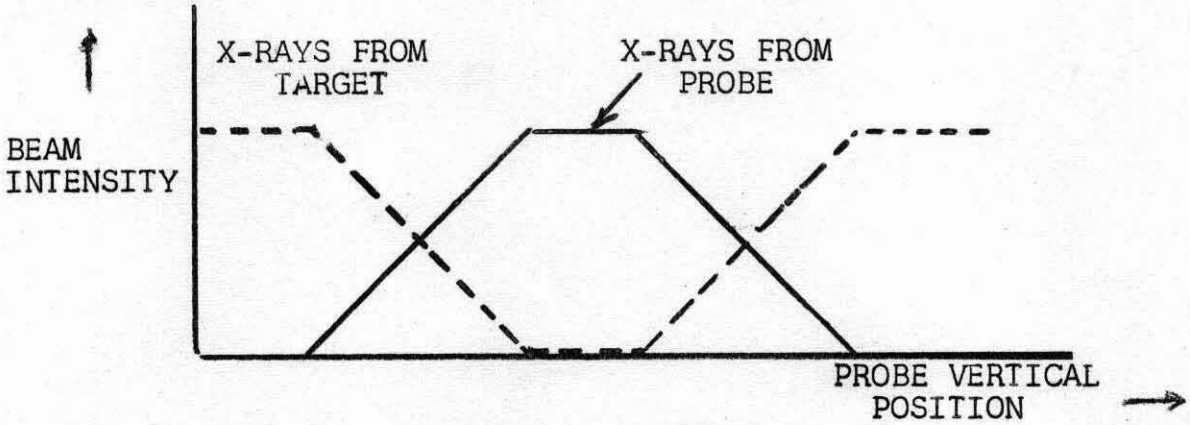

FIGURE II

The width of the vertical spread where no beam is observed from the fixed target corresponds to the width of the probe. The center of this region corresponds to the equilibrium orbit at the probe azimuth. To determine effects of one displaced magnet on the equilibrium orbit around the machine, the inverse experiment, finding the change in position of the equilibrium orbit at the probe azimuth while displacing each magnet vertically in turn around the machine, was done. Displacements

were .045 inch produced by shimming. The experimental results are plotted in Figure 3 and 4 and tabulated in Table IV. (Since some magnets could not be displaced due to physical constraints, some experimental points are missing.)

Radially, measurements were made by determing the radial separation between the probe and the fixed target (located in diametrically opposite straight sections) when the beam is divided almost equally between the two. (The probe was moved in radially until the beam detected from the target fell about in half.) This radial separation was found for a given radial displacement (.062 inch) of each magnet in turn around the machine. The results are given in figure 5 and 6 and Table V. These are compared with differences between calculated values in diametrically opposite straight sections from Table II.

The error on experimental points vertically is due chiefly to determination of the probe angle. The readings were taken to the nearest 5°, corresponding to an estimated error of about $\pm$ .4 in units of the vertical bump. All points agree with calculations to better than .8 except one large error (y_3 for wide magnets).

Radially, the experimental points are averages over data from outward and inward displacements. Occasionally the data were different, presumably due to non-linearities causing different phase shifts. The overall accuracy of the radial points is estimated to be $\pm$ 1/64 of an inch, corresponding to $\pm$ .25 in units of radial displacement. All radial points agree with calculations to an accuracy of .5 or better.

The tables and graphs indicate good agreement between the hard edge theory and the experimental results.

TABLE IV Vertical Misalignments

Comparison of Theory with Experiment

Wide Magnet Moved Vertically

	$y_0/\Delta y$	$y_1/\Delta y$	$y_2/\Delta y$	$y_3/\Delta y$	$y_4/\Delta y$	$y_5/\Delta y$	$y_6/\Delta y$	$y_7/\Delta y$
Calculation	+0.141	-0.750	-0.453	+0.561	+0.687	-0.275	-0.801	-0.058
Experiment	0	-1.17	0	+2.32	+0.81	-0.73	-0.73	0

Narrow Magnet Moved Vertically

	$y_0/\Delta y$	$y_1/\Delta y$	$y_2/\Delta y$	$y_3/\Delta y$	$y_4/\Delta y$	$y_5/\Delta y$	$y_6/\Delta y$	$y_7/\Delta y$
Calculation	-1.110	+1.328	+1.663	-0.636	-1.927	-0.167	+1.858	+0.940
Experiment	-0.73	+1.58	+1.58			-0.73	+1.58	

TABLE V Radial Misalignments

Comparison of Theory with Experiment

Wide Magnet Moved Radially

	$\frac{y_4-y_0}{\Delta y}$	$\frac{y_5-y_1}{\Delta y}$	$\frac{y_6-y_2}{\Delta y}$	$\frac{y_7-y_3}{\Delta y}$	$\frac{y_0-y_4}{\Delta y}$	$\frac{y_1-y_5}{\Delta y}$	$\frac{y_2-y_6}{\Delta y}$	$\frac{y_3-y_7}{\Delta y}$
Calculation	-1.769	+2.967	-1.381	-1.501	+1.769	-2.967	+1.381	+1.501
Experiment		+2.50	-1.00	-1.00		-2.75	+1.00	+1.50

Narrow Magnet Moved Radially

	$\frac{y_4-y_0}{\Delta y}$	$\frac{y_5-y_1}{\Delta y}$	$\frac{y_6-y_2}{\Delta y}$	$\frac{y_7-y_3}{\Delta y}$	$\frac{y_0-y_4}{\Delta y}$	$\frac{y_1-y_5}{\Delta y}$	$\frac{y_2-y_6}{\Delta y}$	$\frac{y_3-y_7}{\Delta y}$
Calculation	+0.277	-0.542	+0.298	+0.225	-0.277	+0.542	-0.298	-0.225
Experiment		-0.75	+0.75		-0.50	+0.50	-0.25	

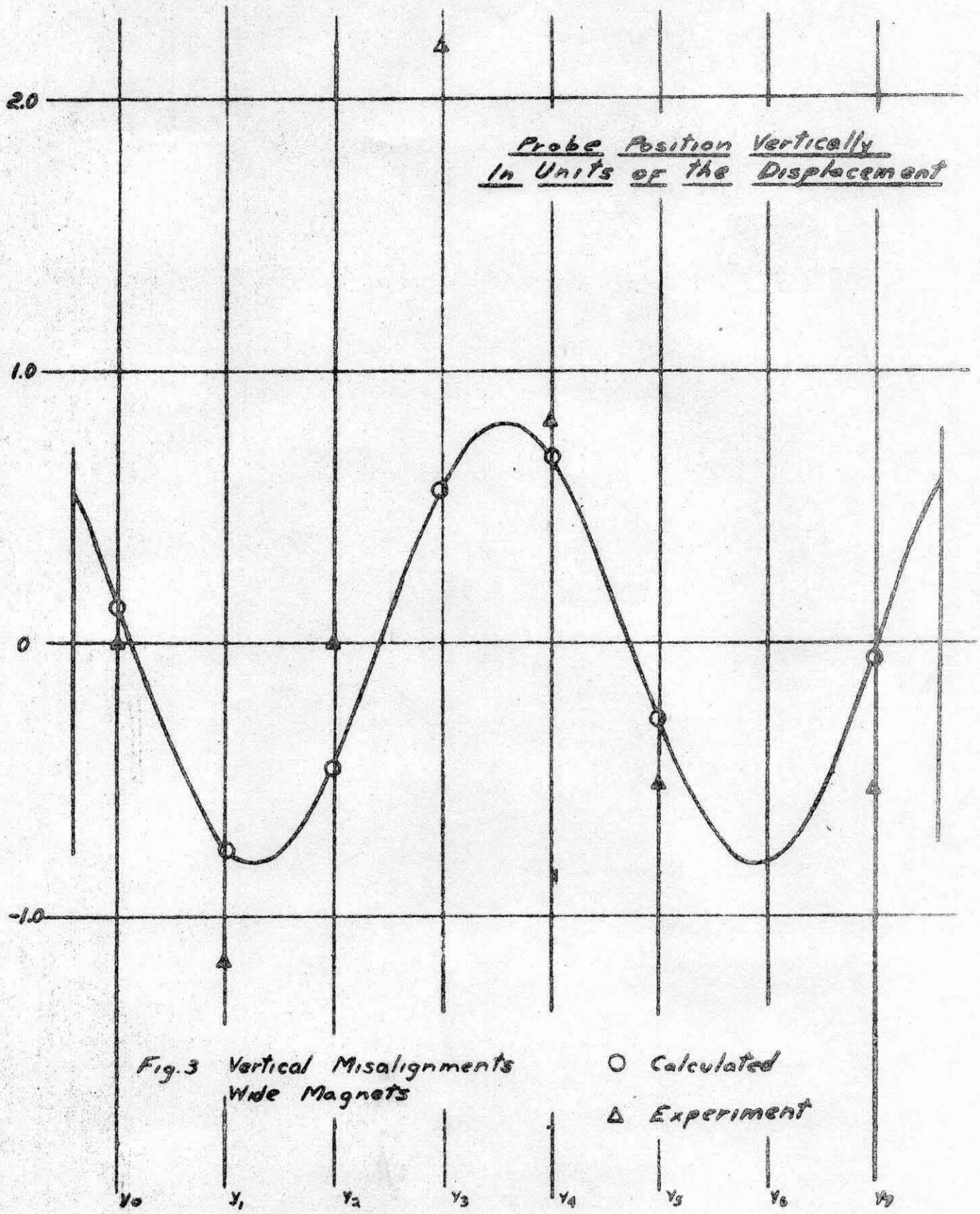

Fig. 3 Vertical Misalignments
Wide Magnets

○ Calculated

△ Experiment

Probe Position Vertically In Units of The Displacements

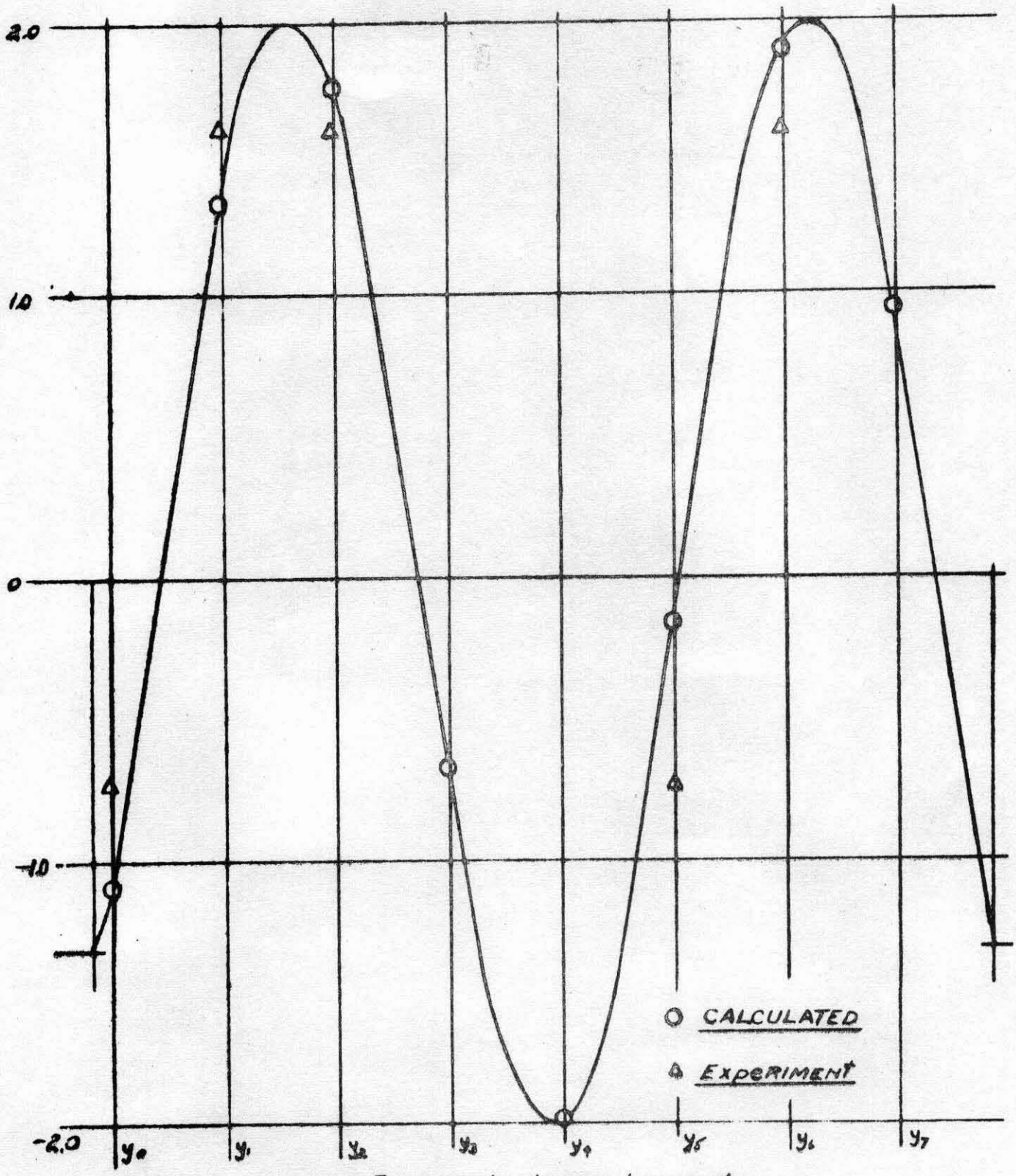

Fig. 4 vertical Misalignments narrow magnets

Radial Difference Between Diametrically Opposite Probes in Units of the Displacement

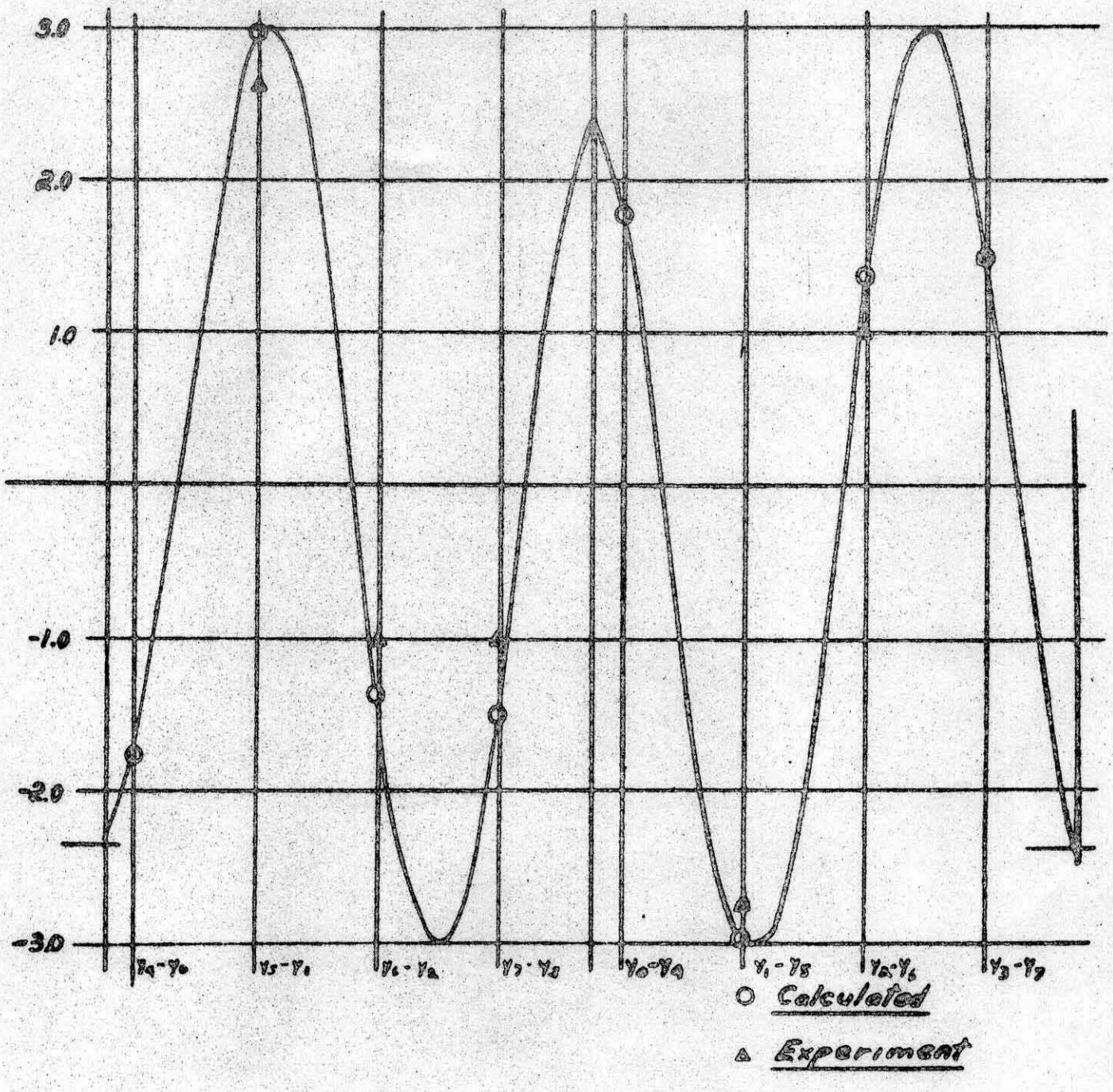

Fig. 5 Radial Misalignments Wide Magnets

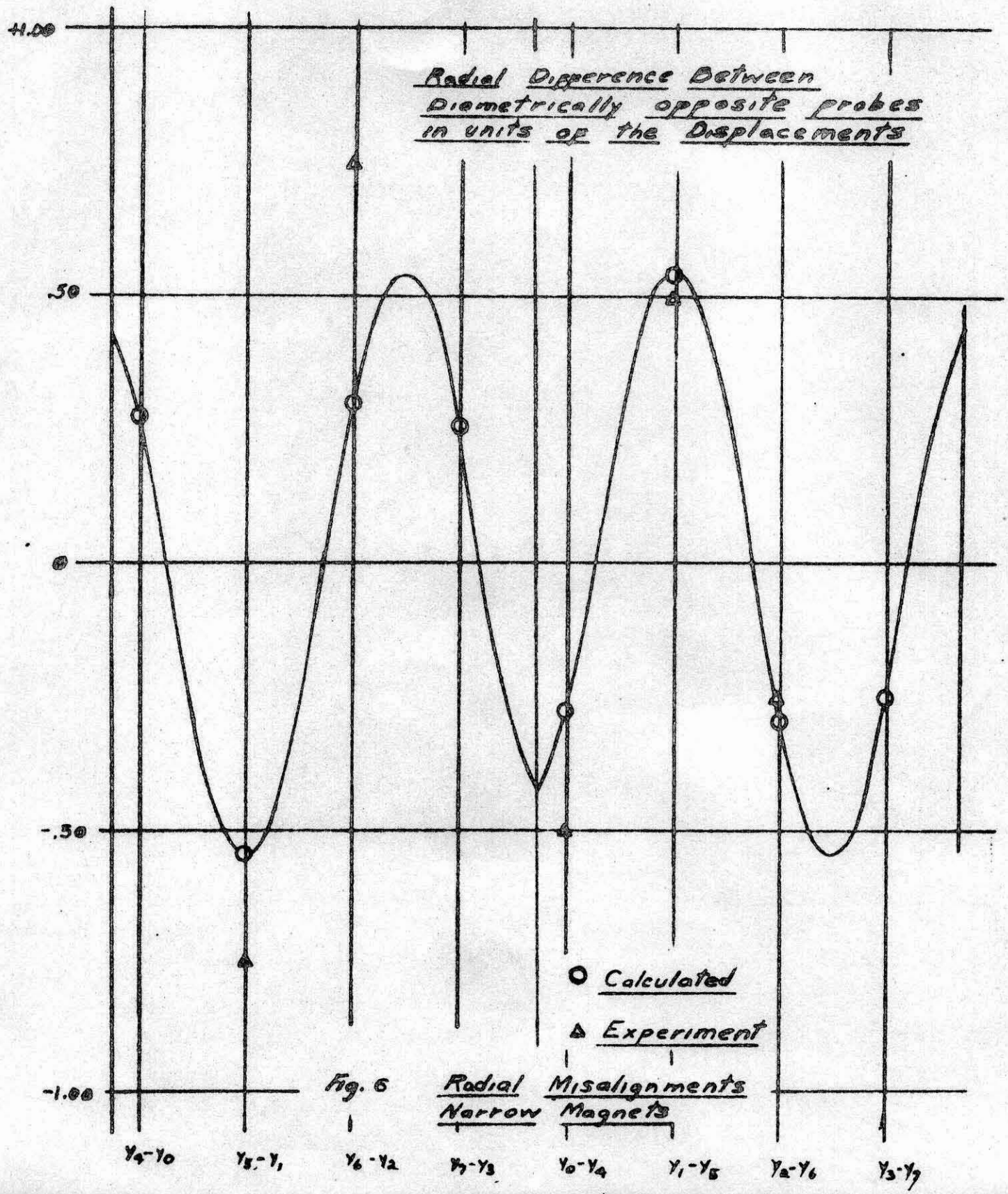

Fig. 6 Radial Misalignments