LAP-92-006
Fermilab Library
0 1160 0013547 9

LALP-92-006

CNLS
WSLETTER

Center for Nonlinear Studies
Los Alamos National Lab.
Los Alamos, NM 87545

No. 80, July 1992

CNLS SCIENCE ACTIVITY

Dispersive Barotropic Equations for Stratified Mesoscale Ocean Dynamics

Roberto Camassa and Darryl D. Holm

Center for Nonlinear Studies
and Theoretical Division
Los Alamos National Laboratory

FERMILAB
JUN 29 1992
LIBRARY

Dispersive effects induced by weak hydrostatic imbalance in the presence of topography and stratification are incorporated into a new model of barotropic (vertically integrated) mesoscale ocean dynamics. This barotropic model is obtained by first expanding the solutions of three dimensional Euler-Boussinesq equations in a regular perturbation expansion in terms of the several small dimensionless parameters appropriate to mesoscale ocean dynamics. Vertical integration from a fixed bottom topography to the free surface interface with the atmosphere and balancing orders in the expansion at fourth order in the small aspect ratio parameter, then yields a system of reduced barotropic equations. These reduced barotropic equations are considerably more tractable than the starting equations and have appropriate limits to known dispersive wave equations such as the forced Kadomtsev-Petviashvili equation in one limit, and the rotating shallow water equations in another. This new model of barotropic ocean dynamics may be of use in developing numerical algorithms for global ocean circulation modeling.

1 Introduction

The fundamental equations describing ocean dynamics are the incompressible Navier-Stokes equations written in a rotating frame, with appropriate boundary conditions imposed at the free surface and fixed bottom boundaries. To complete the problem statement, one must add to these equations a thermodynamic equation of state for the density's dependence on temperature and salinity, as well as dynamical equations governing the advection and diffusion of these two thermodynamic quantities.

In three-dimensional numerical simulations of global ocean circulation, the code currently accepted as the standard in the oceanographic community is the finite difference model associated with the names of Bryan, Cox, Semtner, and Chervin (see ref. [9]). This model takes advantage of the smallness of the ratio of material to gravity-wave speeds, by distinguishing between the 2D barotropic (or vertically integrated) velocity field and the deviation from barotropic, called baroclinic, 3D velocity field. Since the fastest gravity wave speed, to a good approximation, only affects the the barotropic velocity field, the equations determining this velocity field are solved taking, for instance, small time substeps in order to assure resolution of the gravity wave time scale, while the baroclinic velocity field, which evolves on a much longer time scale, is kept fixed and treated as a forcing. The baroclinic field is then computed using the full time step, updated and the process repeated. The effective speed of the computation is thus strongly influenced by the barotropic velocity field solver. Hence, a scheme that would provide a good approximation for the barotropic velocity field for sufficiently long times would be extremely valuable in cutting down the computation time. Our approach to developing such a scheme is to attempt to take advantage of *all* the small parameters in the problem. This paper reports preliminary results in this direction.

Ocean dynamics is characterized by several dimensionless parameters that are small in magnitude. In particular, if one focuses on a resolution of about 50 km for the smallest resolved horizontal structures, then the aspect ratio between the largest vertical scale (the ocean's depth) and smallest interesting horizontal length scale is small (of order 0.1, or less). Other small dimensionless parameters are: the ratio of a typical fluid particle speed to the gravity wave speed (the ratio mentioned earlier as the basis for the finite difference model of Bryan *et al.*); the ratio between gravity wave amplitude and the ocean's depth; and the relative changes of temperature and salinity over the ocean's depth. In contrast to other treatments, the Rossby number measuring the ratio of the eddy turnover frequency to the Earth's rotation frequency is *not* taken to be small here, because of the applications envisioned for our model to relatively fine horizontal resolution.

Our analysis of this problem so far takes advantage of the scale separations implied by these small dimensionless parameters. To do this, we expand the ocean's dynamical variables in powers of these small parameters and seek a balance of scales in the vertically-integrated equations. In the work reported here, we study the nondissipative case and *retain* the small vertical acceleration terms in the Euler-Boussinesq equations

that would otherwise be neglected in the so called "primitive equations" approximation (see, e.g., [2] and [9]). The balance of scales we have found results in a new closure scheme for the vertically-integrated dynamics of the ocean in the nondissipative case. The first advantage of this new closure scheme for the vertically-integrated equations is that it accounts for stratification, rotation and bottom topography in a two-dimensional set of equations, rather than the three-dimensional Euler-Boussinesq equations. The second advantage is that the boundary conditions are incorporated into the closure equations in their derivation, rather than being separately imposed. Both of these advantages allow the new closure model to be numerically simulated much more quickly and easily than the three-dimensional Euler-Boussinesq equations. Moreover, the new closure scheme can extend known equations in the classical Boussinesq dispersive water wave family to account for the effects of rotation, vorticity, stratification, and bottom topography.

In this Newsletter, we nondimensionalize the Euler-Boussinesq equations by using the scaling appropriate to mesoscale ocean dynamics to identify small dimensionless parameters. We find a particular balance among these small parameters that eventually produces nontrivial dynamics from a regular perturbation expansion. The equations resulting from this expansion at fourth order in the small vertical-to-horizontal aspect ratio are integrated vertically and found to close as a dynamical system. Thus we obtain a set of closed barotropic equations that are decoupled from the baroclinic dynamics up to sixth order in the small aspect ratio. Finally we use the classic Marsigli example ([4], pp. 96-98), to provide an appropriate interpretation of the stratification variable summoned by our closure scheme.

2 Derivation of the model equations

The dynamics of an inviscid, incompressible fluid in a three dimensional domain is described, in the Boussinesq approximation, by the motion equation,

$$\frac{d\mathbf{U}}{dt} = -\frac{1}{\rho_{ref}}\nabla_0 p + 2\Omega\ \mathbf{U}\times\hat{\mathbf{z}} - \frac{g}{\rho_{ref}}(\rho_{ref}+\rho)\hat{\mathbf{z}} \tag{1}$$

the incompressibility condition,

$$\frac{d\rho}{dt} = 0, \tag{2}$$

and the conservation of mass (continuity),

$$\nabla_0\cdot\mathbf{U} = 0. \tag{3}$$

In these equations $\frac{d}{dt} = \partial_t + \mathbf{U}\cdot\nabla_0$ is the material derivative, ∇_0 is the three dimensional gradient

$$\nabla_0 := (\partial_x, \partial_y, \partial_z) := (\nabla, \partial_z);$$

and $\mathbf{U}$ is the fluid velocity

$$\mathbf{U} := (u, v, w) := (\mathbf{u}, w).$$

Other notation is: density deviation ρ; pressure p; vertical unit vector $\hat{\mathbf{z}}$; and constant parameters, ρ_{ref}, the reference density; 2Ω the Coriolis parameter; and g, the gravitational acceleration.

Equation (2) is consistent with nondiffusive advection equations for temperature and salinity. (Since we are dealing with ideal fluids, all diffusivity is being neglected.) The kinematic boundary conditions appropriate for an inviscid fluid are (see fig. 1)

$$\begin{aligned} w &= \frac{d\zeta}{dt} \quad \text{at} \quad z = \zeta(x, y, t) \\ w &= -\mathbf{u} \cdot \nabla h \quad \text{at} \quad z = -h(x, y), \end{aligned} \tag{4}$$

and $\mathbf{U}$ is tangential on any vertical lateral boundaries (free-slip). The dynamic boundary condition is (neglecting surface tension)

$$p = \check{p} \quad \text{at} \quad z = \zeta(x, y, t). \tag{5}$$

We nondimensionalize equations (1) through (5) by introducing six units L, H, c, $\mathcal{U}$, ζ_0 and ρ_{ref} and three dimensionless small parameters α, β ϵ as follows

$$\begin{aligned} (x, y, z) &= L(x^*, y^*, \epsilon z^*), \quad \epsilon := \frac{H}{L} \ll 1, \\ t &= \frac{L}{c} t^*, \quad c = \sqrt{gH}, \\ (u, v, w) &= \beta c\,(u^*, v^*, \epsilon w^*), \quad \beta := \frac{\mathcal{U}}{c} \ll 1, \\ \rho &= \rho_{ref} \rho^* \\ p &= \rho_{ref} c^2 p^*, \\ \zeta &= \zeta_0 \zeta^*, \quad \alpha = \frac{\zeta_0}{H} \ll 1. \end{aligned} \tag{6}$$

By introducing these units we are preconditioning the solution to lie in a thin domain, and to have fluid velocities that are small compared to the gravity wave speed. Furthermore, the typical amplitude ζ_0 of the free surface above the equilibrium $z = 0$ is taken to be small compared to the depth H (that is $\alpha = \zeta_0/H \ll 1$). In these units the dimensionless rotation frequency becomes $Ro^{-1} := 2\Omega \frac{L}{\beta c} = \frac{2\Omega L}{\mathcal{U}}$, the inverse of the Rossby number (which is taken to be $O(1)$ for mesoscale ocean dynamics).

In nondimensional form equations (1) and (2) become (after dropping $*$)

$$\beta \frac{d\mathbf{u}}{dt} = -\nabla p + Ro^{-1} \beta^2 \mathbf{u} \times \hat{\mathbf{z}},$$

$$
\begin{aligned}
\beta\epsilon\frac{dw}{dt} &= -\frac{1}{\epsilon}\left(\frac{\partial p}{\partial z} - 1 - \rho\right), \\
\frac{d\rho}{dt} &= 0.
\end{aligned} \tag{7}
$$

where the material derivative is now $\frac{d}{dt} := \frac{\partial}{\partial t} + \beta\mathbf{u}\cdot\nabla + \beta w\frac{\partial}{\partial z}$. In addition to (7) we have the rescaled divergence-free condition with $\nabla_0 = (\partial_x, \partial_y, \epsilon^{-1}\partial_z)$.

$$
u_x + v_y + w_z = 0 \tag{8}
$$

and the boundary conditions

$$
\begin{aligned}
\beta w &= \alpha\frac{d\zeta}{dt} \quad \text{at} \quad z = \zeta(x,y,t), \\
w &= -\mathbf{u}\cdot\nabla h \quad \text{at} \quad z = -h(x,y).
\end{aligned} \tag{9}
$$

The first equation in (9) implies $\alpha = O(\beta)$. To keep the notation compact, in the following we will drop the parameter α in front of ζ, thinking of ζ and its derivatives as order $O(\alpha)$ quantities. The system (7) is similar to system (2.1) in ref.[2], except that we ignore sound waves from the beginning, by imposing exact incompressibility. The oceanographic "primitive equations" ([2],[9]) are obtained in dimensionless form by dropping the vertical acceleration term in (7), thereby strictly enforcing hydrostatic balance. This vertical acceleration term is *retained* here for the barotropic closure scheme we derive, since it introduces additional dispersion arising from hydrostatic imbalance.

These notes focus on the effects of dispersion due to hydrostatic imbalance, topography and stratification on the barotropic (vertically integrated) dynamics. For this, we need the transport equations for vertically integrated quantities (see for example Wu [10]). Namely, the material derivative of a function $f = f(x,y,z,t)$ satisfies the equation

$$
\left[\frac{df}{dt}\right] = \frac{\partial}{\partial t}[f] + \beta\nabla\cdot[f\mathbf{u}] \tag{10}
$$

in which straight brackets denote vertical integration

$$
[f] := \int_{-h}^{\zeta} f(x,y,z,t)\,dz =: (\zeta + h)\bar{f}. \tag{11}
$$

So $[f]$ is the integral of f across the whole fluid layer $-h < z < \zeta$ and $\bar{f}$ is the vertical average of f.

In particular, setting $f = 1, \mathbf{u}, w$, and ρ, gives respectively,

$$
\partial_t\eta + \beta\nabla\cdot(\eta\bar{\mathbf{u}}) = 0 \qquad \eta := \zeta + h,
$$

$$
\begin{aligned}
\beta\partial_t(\eta\overline{\mathbf{u}}) + \beta^2\nabla\cdot(\eta\overline{\mathbf{u}\mathbf{u}}) &= -\eta\overline{\nabla p} + Ro^{-1}\beta^2\eta\overline{\mathbf{u}}\times\hat{\mathbf{z}}, \\
\beta\epsilon\partial_t(\eta\bar{w}) + \beta^2\epsilon\nabla\cdot(\eta\overline{w\mathbf{u}}) &= -\frac{\eta}{\epsilon}\left(\overline{\partial_z p} + (1+\bar{\rho})\right). \\
\partial_t(\eta\bar{\rho}) + \beta\nabla\cdot(\eta\overline{\rho\mathbf{u}}) &= 0. \qquad (12)
\end{aligned}
$$

These four equations represent conservation of volume, horizontal momentum, vertical momentum, and mass, respectively. Although exact, these relations cannot be used as equations of motion in general, since new unknowns in the form of higher order moments appear as a consequence of averaging. Our aim here is to obtain closure for these equations under suitable approximations for the dependent variables $\mathbf{u}, w, \rho$.

We now introduce regular perturbation expansions with small parameters δ and γ whose magnitudes relative to α, β and ϵ are to be determined,

$$
\begin{aligned}
\mathbf{u} &= \mathbf{u}_0 + \delta\mathbf{u}_1 + O(\delta^2), \\
w &= w_0 + \delta w_1 + O(\delta^2), \\
p &= p_0 + \gamma p_1 + \gamma^2 p_2 + O(\gamma^3), \\
\rho &= \gamma\rho_1 + \gamma^2\rho_2 + O(\gamma^3). \qquad (13)
\end{aligned}
$$

We substitute these expansions into the rescaled motion equations (7) and seek a particular balance in the equations resulting at order $O(\gamma^2)$ that goes beyond geostrophic and quasi-geostrophic balance. In the rescaled horizontal motion equation (7), we require $\gamma\nabla p_1$ to be of the same order as $\beta\frac{\partial\mathbf{u}_0}{\partial t}$, hence

$$\beta = O(\gamma).$$

In this ordering, hydrostatic balance in the vertical motion equation will be broken at order $O(\gamma^2)$, since $\frac{\gamma^2}{\epsilon}\left(\frac{\partial p_2}{\partial z} + \rho_2\right)$ is of the same order as $\beta\epsilon\frac{\partial w_0}{\partial t}$, which implies

$$\gamma^2 = O(\epsilon^2\beta) \quad \text{and hence} \quad \beta = O(\epsilon^2).$$

At the next order in γ, the term $\gamma^2\nabla p_2$ in the rescaled horizontal motion equation balances with $\delta\beta\frac{\partial\mathbf{u}_1}{\partial t}$, provided $\gamma^2 = O(\delta\beta)$, which implies

$$\gamma = O(\delta) = O(\epsilon^2).$$

These considerations fix the order of the parameters α, β, γ and δ relative to ϵ. Namely $O(\alpha) = O(\beta) = O(\gamma) = O(\delta) = O(\epsilon^2)$. (For convenience in what follows we shall suppress coefficients of order $O(1)$ and simply identify $\gamma^2 = \beta\epsilon^2$ etc. .) The order of the parameter Ro^{-1} is still free with respect to ϵ. Geostrophic balance is recovered in this ordering when $Ro = O(\beta^2)$. Quasi-geostrophy is recovered when $Ro = O(\beta)$ (see [8]).

For mesoscale ocean dynamics $Ro = O(1)$; therefore the Coriolis force first comes into the mesoscale dynamics at order $O(\beta^2)$, in the $\mathbf{u}_1$ equation.

Having found the scale relations that introduce nonhydrostatic dispersive effects at order $O(\beta^2)$, we next use these relations to derive the equations of dispersive barotropic ocean dynamics. In the w equation at order $O(\epsilon^{-1})$ we have hydrostatic equilibrium, i.e.,

$$\frac{\partial p_0}{\partial z} + 1 = 0 \tag{14}$$

and from the $\mathbf{u}$ equation in (7) at $O(1)$ we have $\nabla p_0 = 0$. Hence $p_0 = -z + const.$. Consider the w equation in (7) at $O(\epsilon)$,

$$\frac{\partial p_1}{\partial z} + \rho_1 = 0 \Rightarrow p_1 = -\int^z \rho_1 dz' + \psi(x, y, t), \tag{15}$$

and compare with the $\mathbf{u}$ equation at order $O(\epsilon^2)$,

$$\nabla p_1 = -\frac{\partial \mathbf{u}_0}{\partial t}. \tag{16}$$

Taking cross derivatives in the two expressions above for p_1 gives

$$\frac{\partial^2 \mathbf{u}_0}{\partial t \partial z} = \nabla \rho_1. \tag{17}$$

Since advection of mass implies, at order $O(\gamma)$,

$$\frac{\partial \rho_1}{\partial t} = 0, \tag{18}$$

the right hand side of (17) is independent of time. Hence, integration of (17) implies $\mathbf{u}_0$ is expressible as

$$\mathbf{u}_0 = t \int^z \nabla \rho_1 dz' + \mathbf{u}_0'(x, y, t) + \tilde{\mathbf{u}}_0(x, y, z), \tag{19}$$

and the first term grows linearly in time unless

$$\nabla \rho_1 = 0. \tag{20}$$

That is, any vertical shear at order $O(\beta)$ must be time independent; otherwise, secular terms will develop. Thus the term $\tilde{\mathbf{u}}_0(x, y, z)$ is the only z-dependence possible for $\mathbf{u}_0$ in the present balancing scheme. For definiteness, we will set $\tilde{\mathbf{u}}_0 = 0$ for the rest of this letter and drop the prime for $\mathbf{u}_0'(x, y, t)$. We will examine the effects of the time independent vertical shear term elsewhere, in [3]. Equations (18) and (20) imply $\rho_1 = \rho_1(z)$, and we will take for the equilibrium density stratification

$$\rho_1(z) = sz + const., \tag{21}$$

where s is a negative constant. This equilibrium density stratification is typical over most of the ocean [7]. Since $\partial\rho_1/\partial t = 0$ we must regard the dynamics of the fluid as taking place in a nonhomogeneous medium of fixed background density $\rho_{ref} + \gamma\rho_1(z)$.

Incompressibility implies

$$\frac{\partial w_0}{\partial z} = -\nabla \cdot \mathbf{u}_0 \Rightarrow w_0 = -z\nabla \cdot \mathbf{u}_0 - \phi(x, y, t). \tag{22}$$

We can evaluate the function ϕ from the boundary condition at $z = -h$,

$$-\mathbf{u}_0 \cdot \nabla h = w_0|_{-h} = h\nabla \cdot \mathbf{u}_0 + \phi,$$

hence (22) becomes

$$w_0 = -\nabla \cdot (z + h)\mathbf{u}_0, \tag{23}$$

which will be useful later. In the w equation at order $O(\beta\epsilon^2)$ we have

$$\frac{\partial p_2}{\partial z} + \rho_2 = -\frac{\partial w_0}{\partial t}, \tag{24}$$

and so from (23)

$$p_2(x, y, z, t) = \frac{1}{2}z^2\partial_t\nabla \cdot \mathbf{u}_0 + z\partial_t\nabla \cdot (h\mathbf{u}_0) - \int^z \rho_2 dz' + \psi'(x, y, t). \tag{25}$$

Only partial differentiation with respect to time appears in (25), since our ordering scheme requires us to neglect in the material time derivative the advective transport term that would otherwise appear in (24). Next, we eliminate both ψ in (15) and ψ' in (25) by using the free boundary conditions for the pressure

$$\begin{aligned} \tilde{p} &:= p|_{z=\zeta} = \left(p_0 + \gamma p_1 + \gamma^2 p_2 + O(\gamma^3)\right)|_{z=\zeta} \\ &= const. - \zeta + \gamma\left(-\int^\zeta \rho_1(z)dz + \psi(x, y, t)\right) + \gamma^2 p_2(x, y, \zeta, t) + O(\gamma^3). \end{aligned} \tag{26}$$

Hence the difference between the pressure at any z and the specified surface pressure, $\tilde{p}$, is

$$\Delta p := p - \tilde{p} = \zeta + \gamma\int_z^\zeta \rho_1(z')dz' + \gamma^2\Delta p_2, \tag{27}$$

where

$$\Delta p_2 = \int_z^\zeta \rho_2(x, y, z', t)dz' + \frac{1}{2}z^2\partial_t\nabla \cdot \mathbf{u}_0 + z\partial_t\nabla \cdot (h\mathbf{u}_0) + O(\alpha). \tag{28}$$

We remark that $p_2|_\zeta$ is of the same order as ζ, and as the transport terms neglected in (24), namely $O(\alpha)$. For the reader's convenience the scaling and matching considerations so far are summarized order by order in fig. 2.

We still need to evaluate $\overline{\nabla p}$, where

$$\nabla p = \nabla \tilde{p} + (1 + \gamma\rho_1(0))\nabla\zeta + \gamma^2\nabla(\Delta p_2) + O(\gamma^3, \alpha^2\gamma). \tag{29}$$

Evaluating the average of (28) leads to

$$\overline{\nabla(\Delta p_2)} = \overline{(z+h)\nabla\rho_2} - \left(\frac{h}{2}\nabla\partial_t(\nabla\cdot(h\mathbf{u}_0)) - \frac{h^2}{6}\nabla\partial_t(\nabla\cdot\mathbf{u}_0)\right) + O(\alpha). \tag{30}$$

Here the first term comes from taking the horizontal gradient inside the integral in (28), neglecting surface terms of order $O(\alpha)$ then averaging and exchanging order of integration. The second set of terms in (30) again neglects surface terms and transport terms of order $O(\alpha)$.

For closure in the barotropic equations we need a dynamical equation for the first term in (30). From equation (7) at order $O(\beta^2)$, multiplied by $z+h$ and vertically averaged, we obtain after some algebra

$$\begin{aligned}
\partial_t\overline{(z+h)\nabla\rho_2} + O(\alpha) &= -s\overline{(z+h)\nabla w_0} \\
\text{by eq. (23)} &= s\frac{h}{\eta}\left(\frac{h}{2}\nabla(\nabla\cdot(h\mathbf{u}_0)) - \frac{h^2}{6}\nabla(\nabla\cdot\mathbf{u}_0)\right) \\
&= s\left(\frac{h}{2}\nabla(\nabla\cdot(h\mathbf{u}_0)) - \frac{h^2}{6}\nabla(\nabla\cdot\mathbf{u}_0)\right) + O(\alpha).
\end{aligned} \tag{31}$$

We remark that a choice of the density stratification different from the linear law assumed in (21) would lead to the same structure for the right hand side of (31), i.e., the terms $h\nabla(\nabla\cdot(h\mathbf{u}_0))$ and $h^2\nabla(\nabla\cdot\mathbf{u}_0)$ would still be there but with different constant coefficients depending on the particular form of $\rho_1(z)$.

Now we are in position to write a closed set of equations for the stratified barotropic fluid. Referring to the first and second equations in (12) gives

$$\overline{\mathbf{u}}_t + \beta(\overline{\mathbf{u}}\cdot\nabla)\overline{\mathbf{u}} = -\frac{1}{\beta}\overline{\nabla p} + Ro^{-1}\beta\overline{\mathbf{u}}\times\hat{\mathbf{z}} - \frac{\beta}{\eta}\nabla\cdot\eta(\overline{\mathbf{u}\mathbf{u}} - \overline{\mathbf{u}}\,\overline{\mathbf{u}}). \tag{32}$$

Since $\mathbf{u} = \mathbf{u}_0 + \delta\mathbf{u}_1 + O(\delta^2)$ and $\mathbf{u}_0$ has been taken to be independent of z, we have

$$\overline{\mathbf{u}\mathbf{u}} - \overline{\mathbf{u}}\,\overline{\mathbf{u}} = \delta^2(\overline{\mathbf{u}_1\mathbf{u}_1} - \overline{\mathbf{u}}_1\overline{\mathbf{u}}_1) + O(\delta^3), \tag{33}$$

and hence the last term in (32) is negligible. After substituting for $\overline{\nabla p}$ from (29) and (30) we find a closed set of dynamical equations for ζ, $\overline{\mathbf{u}}$ and $\mathbf{A}$ (since $\overline{\mathbf{u}} = \mathbf{u}_0 + O(\delta)$, and reinstating the order parameter α for ζ):

$$\begin{aligned}
&\alpha\frac{\partial\zeta}{\partial t} + \beta\nabla\cdot(\alpha\zeta + h)\overline{\mathbf{u}} = 0, \\
&\beta\frac{\partial\overline{\mathbf{u}}}{\partial t} + \beta^2(\overline{\mathbf{u}}\cdot\nabla)\overline{\mathbf{u}} + Ro^{-1}\beta^2\hat{\mathbf{z}}\times\overline{\mathbf{u}} = -\gamma\nabla\tilde{p} - \alpha(1+\gamma\tilde{\rho})\nabla\zeta - \mathbf{A} + \frac{\partial\mathbf{D}}{\partial t}, \\
&\frac{\partial\mathbf{A}}{\partial t} = s\mathbf{D},
\end{aligned} \tag{34}$$

where we define

$$\mathbf{A} := \gamma^2 \overline{(z+h)\nabla\rho_2}, \tag{35}$$

$$\mathbf{D} := \gamma\beta\left(\frac{h}{2}\nabla(\nabla\cdot(h\overline{\mathbf{u}})) - \frac{h^2}{6}\nabla(\nabla\cdot\overline{\mathbf{u}})\right). \tag{36}$$

and $\tilde{p}(x,y,t)$ and $\tilde{\rho}$ denote the specified surface pressure and the surface equilibrium density deviation, respectively. We remark that the first equation in (34) is exact, while the second and third equations have an error term of order $O(\beta\epsilon^4, \gamma^3 etc.)$. Restoring dimensions now gives our final equations

$$\frac{\partial\zeta}{\partial t} + \nabla\cdot(\zeta+h)\overline{\mathbf{u}} = 0,$$

$$\frac{\partial\overline{\mathbf{u}}}{\partial t} + (\overline{\mathbf{u}}\cdot\nabla)\overline{\mathbf{u}} + 2\Omega\hat{\mathbf{z}}\times\overline{\mathbf{u}} = -\frac{1}{\rho_{ref}}\nabla\tilde{p} - g(1+\frac{\tilde{\rho}}{\rho_{ref}})\nabla\zeta - \frac{g}{\rho_{ref}}\mathbf{A} + \frac{\partial\mathbf{D}}{\partial t},$$

$$\frac{\partial\mathbf{A}}{\partial t} = \sigma\mathbf{D}, \tag{37}$$

where now

$$\mathbf{A} := \overline{(z+h)\nabla\rho}, \tag{38}$$

$$\mathbf{D} := \left(\frac{h}{2}\nabla(\nabla\cdot(h\overline{\mathbf{u}})) - \frac{h^2}{6}\nabla(\nabla\cdot\overline{\mathbf{u}})\right), \tag{39}$$

and $\sigma := s\gamma\frac{\rho_{ref}}{H} = \frac{d\rho_1}{dz}$ is a negative constant.

Equations (37) are dispersive shallow water equations that incorporate effects of weak deviations from hydrostatic balance, weak stratification and strong, $O(1)$, topography. The key approximations in deriving equations (37) are: weak baroclinic horizontal velocity dependence, imposed after equation (20); and weak horizontal density gradients. The latter of these approximations is imposed in order to eliminate secular velocity growth. The effects of the mean vertical shear still allowed by (19) will be addressed elsewhere [3]. Equations (37) restrict to those of Wu [10], provided the stratification is absent ($\mathbf{A} = 0$ and $\sigma = 0$), and there is no rotation ($\Omega = 0$). In Wu's derivation, the initial flow has no vorticity. Hence, there exists a velocity potential for $\mathbf{U}$ at all times, and the asymptotic expansion proceeds in terms of this potential. In this case, the mean vertical shear $\tilde{\mathbf{u}}_0(x,y,z)$ in (19) is absent.

We notice that the solutions $\overline{\mathbf{u}}$ of eqs. (37) give information about $\mathbf{u}_1$ and ρ_2. In fact, at order $O(\delta\beta)$, we have

$$\frac{\partial\mathbf{u}_1}{\partial t} + (\mathbf{u}_0\cdot\nabla)\mathbf{u}_0 + Ro^{-1}\hat{\mathbf{z}}\times\mathbf{u}_0 = -\nabla p_2, \tag{40}$$

where p_2 is given by (28) in terms of $\mathbf{u}_0$ and powers of z, after ρ_2 has been determined from

$$\frac{\partial\rho_2}{\partial t} = -sw_0. \tag{41}$$

Hence, replacing $\mathbf{u}_0$ ($\equiv \overline{\mathbf{u}} + O(\delta)$) by $\overline{\mathbf{u}}$ in (40) and (41), and neglecting terms of order $O(\delta)$ gives a system of equations recovering $\mathbf{u}_1(x, y, z, t)$ and $\rho_2(x, y, z, t)$.

In the absence of stratification ($\sigma = 0$) and without the dispersion caused by hydrostatic pressure imbalance ($\mathbf{D} = 0$), these equations reduce to the standard, topographically forced, rotating shallow water equations. Dropping overbars and surface forcing terms, these are

$$\frac{\partial \eta}{\partial t} + \nabla \cdot \eta \mathbf{u} = 0,$$

$$\frac{\partial \mathbf{u}}{\partial t} + (\mathbf{u} \cdot \nabla)\mathbf{u} + 2\Omega \hat{\mathbf{z}} \times \mathbf{u} = -g\nabla\eta + g\nabla h. \tag{42}$$

It remains to give an interpretation of the acceleration due to stratification, $-\frac{g}{\rho_{ref}}\mathbf{A}$. For this, we refer to ancient experiments of Marsigli, as described in [4].

In the seventeenth century, L. M. Marsigli considered convective adjustment due to horizontal density gradients as the mechanism for producing the undercurrent flowing through the Bosphorus Strait toward the Black Sea from the Mediterranean. To verify this mechanism, Marsigli set up laboratory experiments with a partition separating two compartments containing water of different salinities. When the partition was removed, water at lower depths would flow from the compartment of higher salinity (as in the Mediterranean) toward the compartment of lower salinity (as in the Black Sea), thus explaining the mechanism for the undercurrent. Of course, the explanation comes from differences in hydrostatic force for the two compartments, which is precisely the effect being modeled in eqs. (37) by the acceleration vector $-\frac{g}{\rho_{ref}}\mathbf{A}$. To see this, we compute the hydrostatic forces acting on the partition for the set-up shown in fig. 3a. Here we assume for simplicity $\rho = \rho_{ref} + \gamma^2\rho_2$, i.e., no equilibrium stratification ($\rho_1 = 0$), and restrict density variations to ρ_2 only. Immediately after the removal of the partition, the difference in hydrostatic forces along the partition would yield an initial acceleration field for the fluid particles. Namely, a (small) force $\Delta\mathbf{f}$

$$\Delta\mathbf{f} = -g\gamma^2(\rho_+ - \rho_-)z\hat{\mathbf{x}} := -g\gamma^2\Delta\rho z\hat{\mathbf{x}}$$

is directed along the x-axis from the higher-density ($\gamma^2\rho_+$) compartment toward the lower-density ($\gamma^2\rho_-$) one. Vertically averaging this force gives initial acceleration of a column of water located at the partition, i.e., $-\frac{1}{2}\gamma^2\frac{gh\Delta\rho}{\rho_{ref}}$. It is easy to see from the definition (38) that this vertical average is equal to the acceleration vector $-\frac{g}{\rho_{ref}}\mathbf{A}$ for this density distribution. Similarly, calculating differences in hydrostatic forces for other simple initial density distributions (such as in figs. 3b,c) again yields the same value as $-\frac{g}{\rho_{ref}}\mathbf{A}$ for the initial acceleration of the barotropic motion. The ensuing dynamics will involve oscillation and circulation generated by the gravity wave force and the Coriolis force. This dynamics will be discussed in more detail elsewhere.

Conclusion

Our purpose in this letter has been to report preliminary results concerning the dispersive effects of hydrostatic imbalance and stratification in the barotropic approximation, by developing an asymptotic series for mesoscale ocean dynamics that closes at order $O(\epsilon^4)$ for solutions with weak vertical shear and weak horizontal density gradients. The resulting closure scheme is the set of dispersive shallow water equations (37). These equations describe the barotropic (vertically integrated) motion, in the absence of dissipation and without any coupling to the baroclinic motion. The effect of the dispersive terms in (37) is to limit the range of frequencies available to the barotropic motion. (The barotropic motion has the highest frequencies present in the problem of mesoscale ocean dynamics.) Equations (37) also extend the rotating shallow water description to include hydrostatic imbalance and stratification, while they extend the classical Boussinesq family of equations such as KP to include stratification, rotation and vorticity. The relationships among these families of equations are sketched in fig. 4. In later work, we will address the effects of higher order ($O(\epsilon^6)$) nonlinear transport, baroclinic coupling and dissipation.

References

[1] Ablowitz, M. J. & Segur, H., 1981 *Solitons and the Inverse Scattering Transform*, SIAM Studies in Applied Mathematics 4, SIAM, Philadelphia, PA.

[2] Browning, G. L., Holland, W. R., Kreiss, H.-O. & Worley, S. J., 1990 An accurate hyperbolic system for approximately hydrostatic and incompressible oceanographic flows. *Dyn. Atm. Oceans* **14**, 303-332.

[3] Camassa, R., & Holm, D. D., 1992 , in preparation.

[4] Gill, A. E. 1982 *Atmosphere-Ocean Dynamics*, Academic Press, New York, NY.

[5] Grimshaw, R. 1985 Evolution equations for weakly nonlinear, long internal waves in a rotating fluid. *Stud. Appl. Math.* **73**, 1-33.

[6] Holm, D. D., Marsden, J. E., Ratiu, T. & Weinstein, A. 1985 Nonlinear stability of fluid and plasma equilibria. *Phys. Rep.* **123**, 1-116.

[7] McWilliams, J. C. 1991 in *Nonlinear Topics in Ocean Physics*, A. R. Osborne ed., North-Holland, Amsterdam, The Netherlands, pp. 5-50.

[8] Pedlosky, J. 1979 *Geophysical Fluid Dynamics*, Springer-Verlag, New York, NY.

[9] Smith, R. D., Dukowitz, J. K., Malone, R.C., 1992 Parallel ocean general circulation modeling. *Physica D*, to appear.

[10] Wu, T.Y. 1981 Long waves in ocean and coastal waters. *J. Eng. Mech. Div., Proc. ASCE* **107**, 502-522.

Figure captions

Figure 1. The geometry of the fluid layer.

Figure 2. "Flow-chart" of the derivation of eqs. (37), order by order in the asymptotic expansion.

Figure 3. Three different initial conditions for Marsigli's experiment. The vertically averaged forces acting on the partition at $x = 0$ are: a) $-\gamma^2 \frac{gh}{2} \Delta\rho$; b) $-\gamma^2 \frac{3gh}{8} \Delta\rho$; c) $-\gamma^2 \frac{gh}{8} \Delta\rho$.

Figure 4. Relationships among the various barotropic equations.

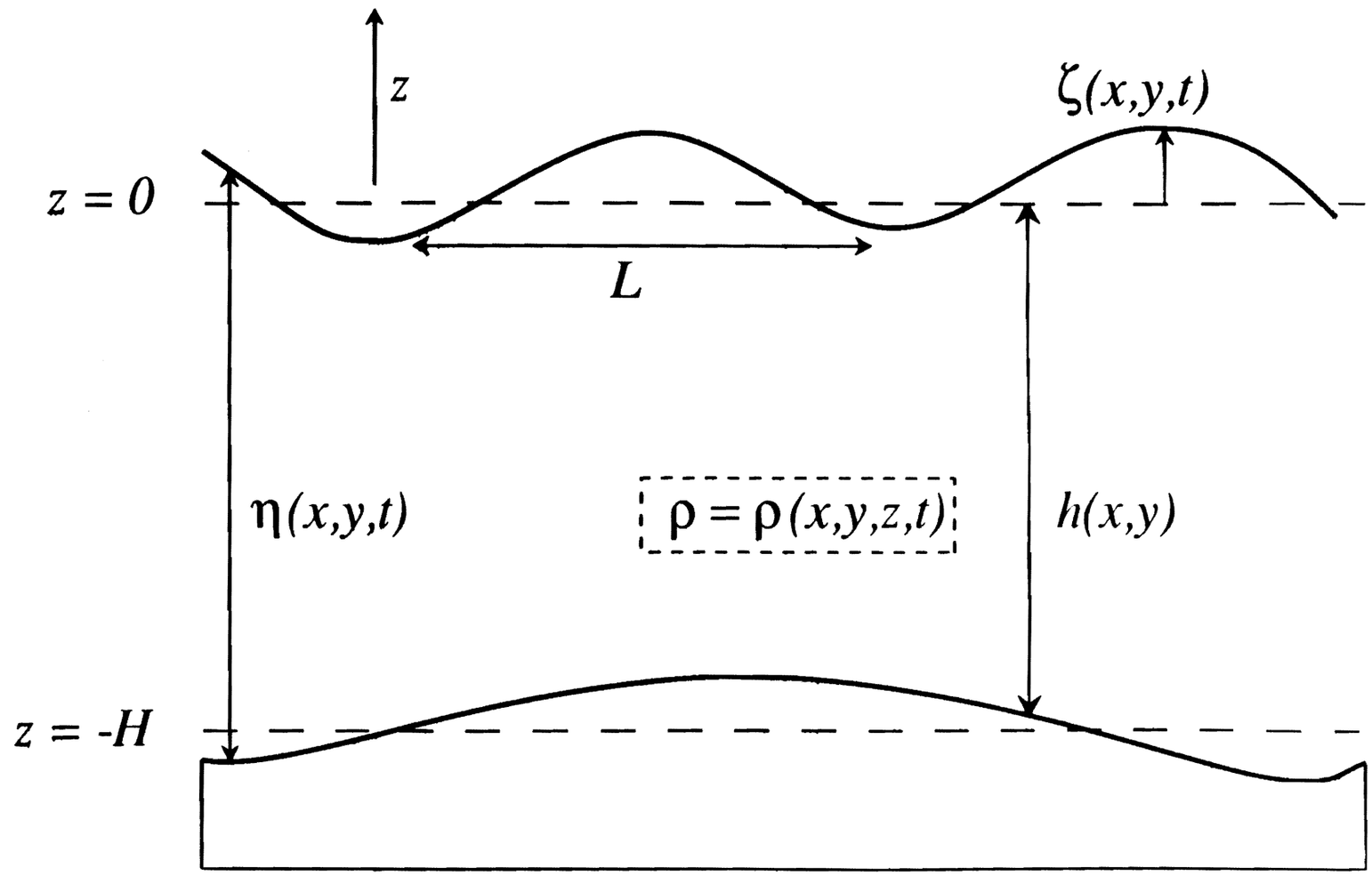

fig. 1

"Flow Chart" of Derivation

$O(\varepsilon^{-1})$	*w-eq*	$\Rightarrow$	$p_0 = -z + \pi(x,y,t)$
$O(1)$	$\boldsymbol{u}$*-eq*	$\Rightarrow$	$\nabla p_0 = 0$
$O(\varepsilon)$	*w-eq*	$\Rightarrow$	$p_1 = \int^{z} \rho_1 (z)dz$
$O(\varepsilon^2)$	$\boldsymbol{u}$*-eq*	$\Rightarrow$	$\nabla \rho_1 = 0$
$O(\varepsilon^2)$	*incompressibility and b.c. @ $z = -h$*	$\Rightarrow$	$\nabla \cdot (z+h)\boldsymbol{u}_0 = -w_0$
$O(\varepsilon^3)$	*w-eq*	$\Rightarrow$	$p_2 = p_2 (\boldsymbol{u}_0, \rho_2)$

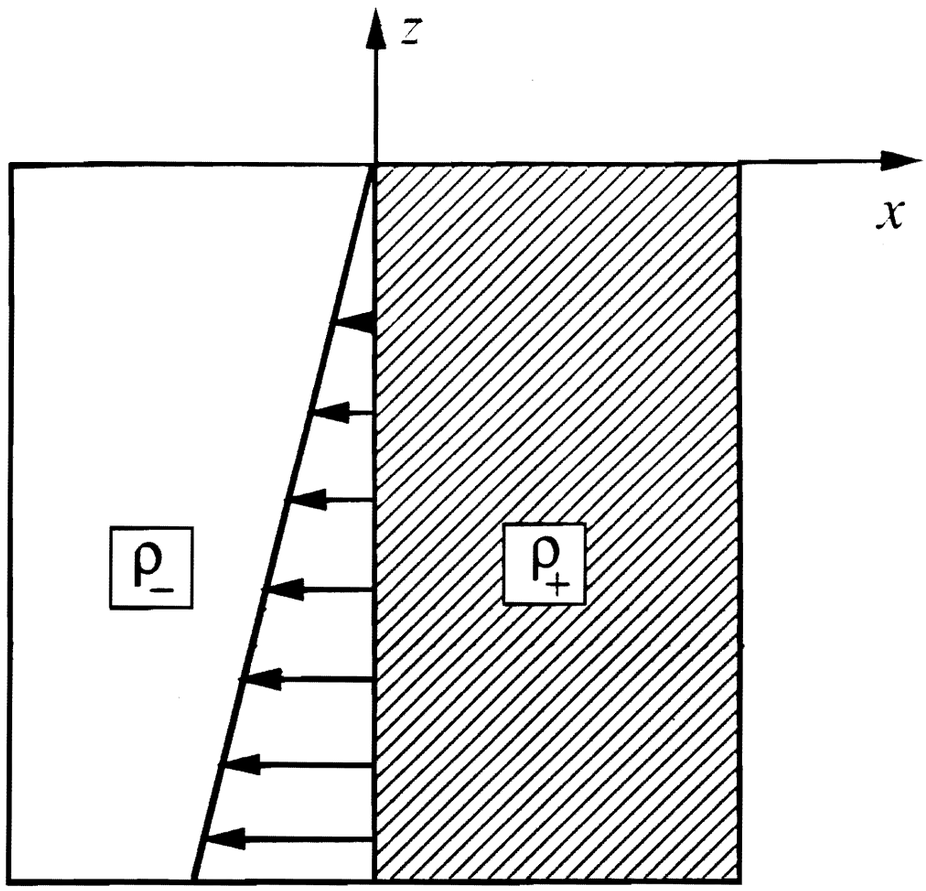
z
x
ρ_
ρ+

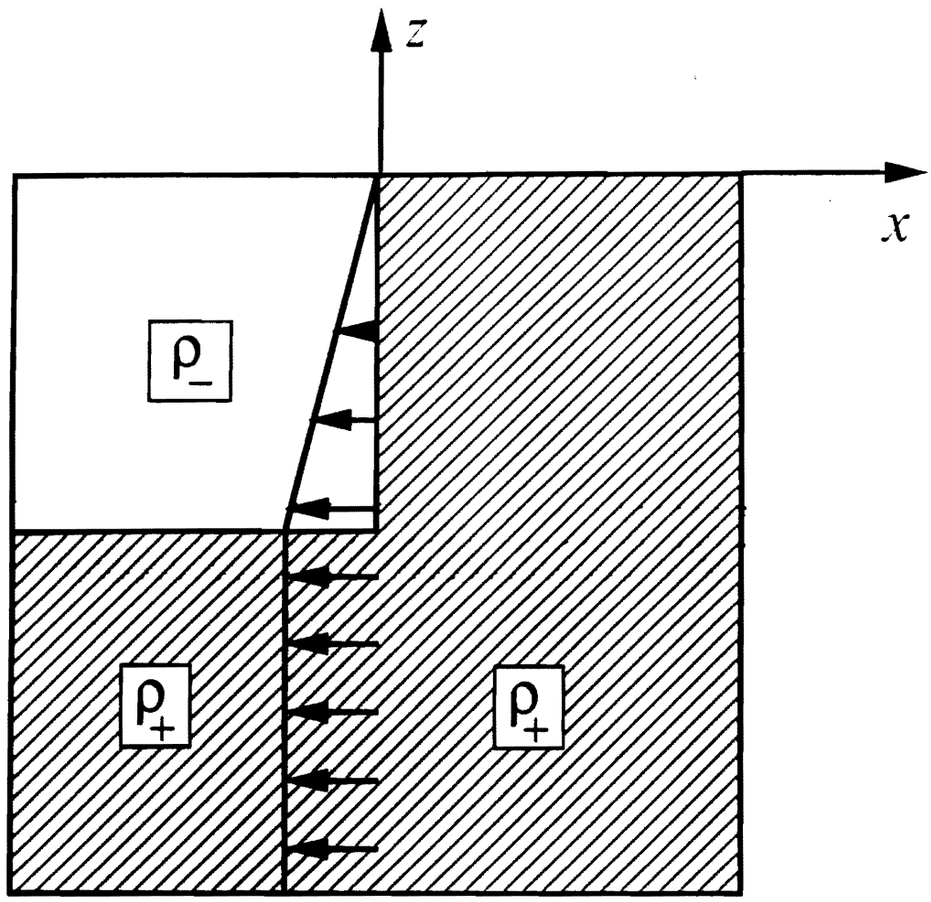
z
x
ρ_
ρ+
ρ+

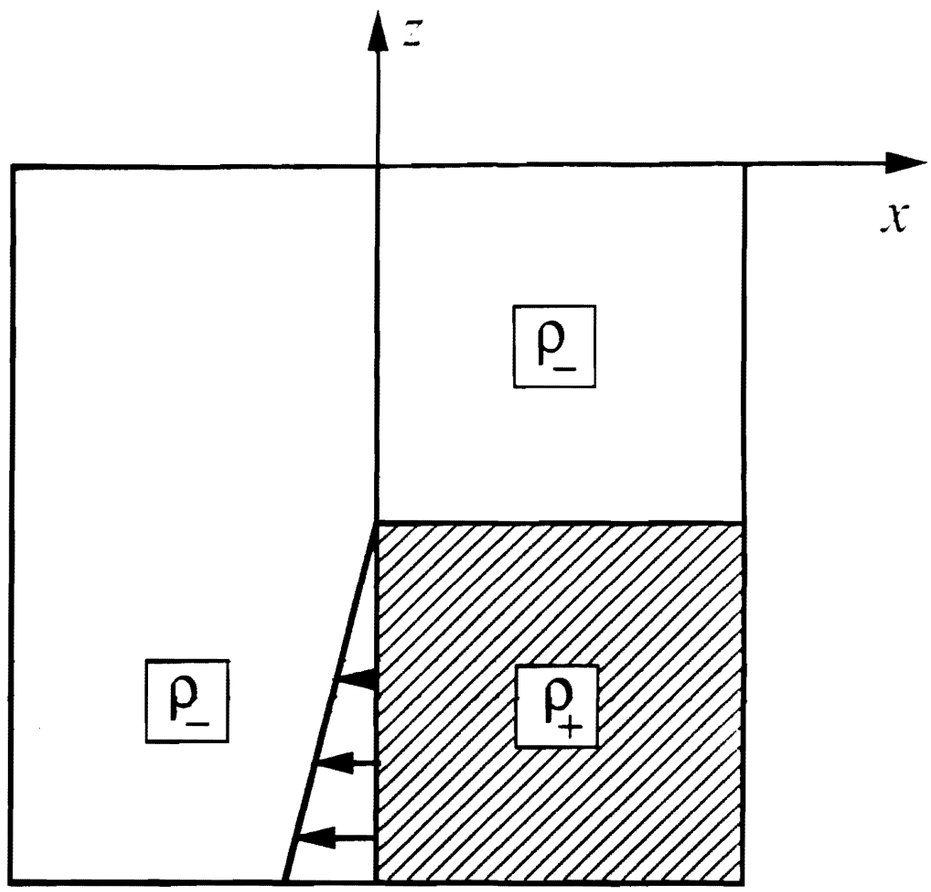
z
x
ρ_
ρ_
ρ+

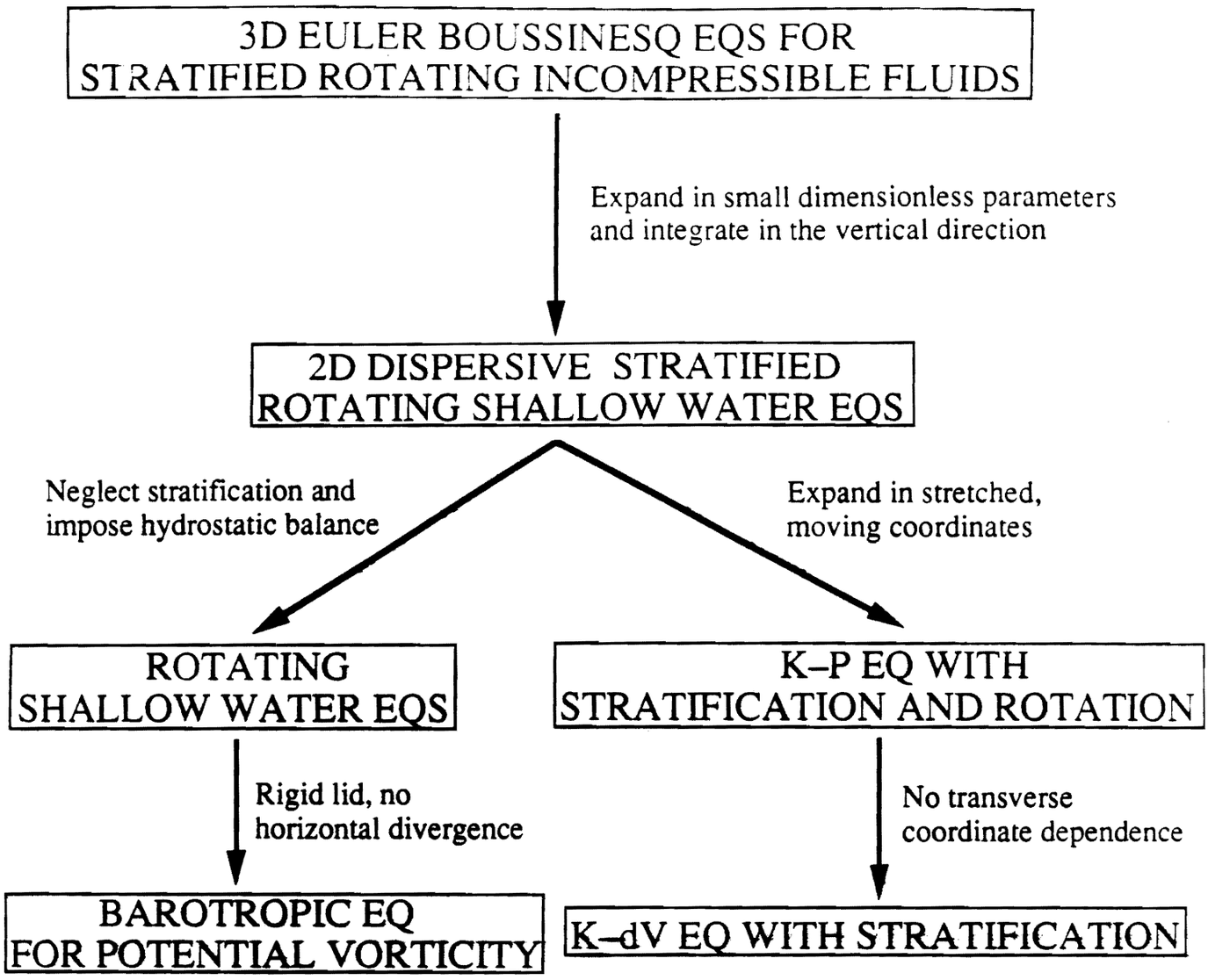
3D EULER BOUSSINESQ EQS FOR STRATIFIED ROTATING INCOMPRESSIBLE FLUIDS
Expand in small dimensionless parameters and integrate in the vertical direction
2D DISPERSIVE STRATIFIED ROTATING SHALLOW WATER EQS
Neglect stratification and impose hydrostatic balance
Expand in stretched, moving coordinates
ROTATING SHALLOW WATER EQS
K–P EQ WITH STRATIFICATION AND ROTATION
Rigid lid, no horizontal divergence
No transverse coordinate dependence
BAROTROPIC EQ FOR POTENTIAL VORTICITY
K–dV EQ WITH STRATIFICATION

UPCOMING CNLS COLLOQUIA

Wed., July 1	*"Exact Solutions in the Laplacian Pattern Formation,"* Mark Mineev, Courant Inst., 3:00 p.m., CNLS Conference Room, followed by tea
Tues., July 7	*"Singular Perturbation Theory for Homoclinic Orbits in a Class of Near-Integrable Hamiltonian Systems,"* Gregor Kovacic, Rensselaer Polytechnic Inst., 3:00 p.m., CNLS Conference Room
Wed., July 8	*"Bring High Performance Computing into the School Room,"* Mark Mitchell, Montant State Univ., 3:00 p.m., CNLS Conference Room, followed by tea
Tues., July 14	*"To Be Announced,"* Moshe Gottlieb, Ben Gurion Univ., 3:00 p.m., CNLS Conference Room
Wed., July 15	*"To Be Announced,"* Jia Li, Univ. of Alabama, 3:00 p.m., CNLS Conference Room, followed by tea
Tues., July 21	*"To Be Announced,"* Edwin Power, Univ. College of London, 3:00 p.m., CNLS Conference Room
Wed., July 22	*"Completed Double Layer Boundary Element Method in Elasticity,"* Nhan Phan-Thien, Univ. of Sydney, 3:00 p.m., CNLS Conference Room, followed by tea
Wed., July 29	*"To Be Announced,"* Timothy Sullivan, Kenyon College, 3:00 p.m., CNLS Conference Room, followed by tea

UPCOMING CNLS WORKSHOPS

Title	Dates	Location	Technical Host
Reactive Turbulence Workshop	8/3-7/92	CNLS	B. Nichols
Future of Machine Learning	8/6-7/92	Los Alamos	A. Lapedes
Nonlinear RF Excitation of the Ionosphere	1/11-14/93	Santa Fe	D. DuBois

CNLS PUBLICATIONS - NEW RELEASES

92-1722 Steen Rasmussen, Rasmus Feldberg and Carsten Knudsen, *"Self-Programming of Matter and the Evolution of Proto-Biological Organizations"*

92-1785 James M. Hyman, Robert J. Knapp and James C. Scovel, *"High Order Finite Volume Approximations to Differential Operators on Nonuniform Grids"*

92-1790 O. L. Bakalis, R. D. Jones, Y. C. Lee and B. J. Travis, *"A Recurrent Neural Network Approach for the Solution to the Inverse Problem of Iterated Function Systems"*

92-1791 Jarmo Hietarinta and Seppo Mikkola, *"Chaos in the One Dimensional Newtonian Three-Body Problem"*

92-1844 Serge Aubry, *"Bipolaronic Charge Density Waves Polaronic Spin Density Waves and High Tc Superconductivity"*

92-1894 John E. Pearson and William J. Bruno; *"Pattern Formation in an N+Q Component Reaction-Diffusion System"*

92-1895 John E. Pearson, *"Pattern Formation in a (2+1) Species Activator-Inhibitor-Immobilizer System"*

92-1911 Gregor Kovacic, *"Singular Perturbation Theory for Homoclinic Orbits in a Class of Near-Integrable Hamiltonian Systems"*

92-1968 Stephanie Forrest and Alan S. Perelson, *"Computaton and the Immune System"*

92-1974 Toshiyuki Gotoh and Robert H. Kraichnan, *"Statistics of Decaying Burgers Turbulence"*

INTRODUCTION TO LONG-TERM VISITORS, STUDENTS AND POSTDOCS

Our most recent arrivals and very brief interests:

Roger Dodd, San Jose State Univ., fluids and condensed matter systems

Philip Goldberg, City Univ. of New York, nonlinear optics, plasma physics

Toshiyuki Gotoh, Nagoya Inst. of Technology, turbulence

Jia Li, Univ. of Alabama., environmental and epidemological models

Gottfried Mayer-Kress, Iniv. of CA, Santa Cruz, computer visualization

Edriss Titi, Univ. of CA, Irvine, fluid turbulence and ocean dynamics

ORGANIZATION OF THE CENTER

Susan Coghlan, 5-1556	Systems Manager
Gary Doolen, 7-1444	Acting Director
Robert Ecke, 7-6733	Acting Deputy Director
Dorothy Garcia, 7-1444	Secretary
Frankie Gomez, 7-1444	Administrative Specialist
Kristie Harris, 7-1444	UGS
Erica Jen, 7-5436	Acting Deputy Director
Y. C. Lee, 7-8715	Senior Scientific Advisor
Janet Pacheco, 7-1444	UGS
Barbara Rhodes, 7-1444	Secretary
Susan Spach, 7-1444	Secretary
Felicia Trujillo, 7-1444	UGS

For more information on newsletter items or for suggestions for future issues, contact Barbara Rhodes, (505)667-1444, MS-B258, by FAX at (505)665-2659, or by e-mail at "office@goshawk.lanl.gov"

Los Alamos National Laboratory, an Affirmative Action/Equal Opportunity Employer, is operated by the University of California for the United States Department of Energy under contract W-7405-ENG-36.

rtificial Life Makes
or Lively Conference

Rex Graham

RNAL STAFF WRITER

ANTA FE — About 400 scientists m around the world are focusing s week on the blurry boundary tween science fiction and fact as y unveil life forms they have ated in everything from test es to computers.

Yes, life in computers.

Welcome to the Third Artificial e Workshop, where researchers on a quest for new definitions of e" and "artificial." They have eed to disagree.

We're trying to define life as we w it here (on Earth), and I don't think we can. We don't know enough," conference organizer Christopher Langton said Monday at the start of the weeklong conference sponsored by the Santa Fe Institute, a non-profit scientific research institute and think tank, and Los Alamos National Laboratories.

Langton is an internationally recognized guru of artificial life, a new discipline in which scientists try to create lifelike organisms and biological systems in the test tube or computers.

Most people think they know life

MORE: See SCIENTISTS on PAGE A6

cientists To Show Off Artificial Life at Conference

TINUED FROM PAGE A1

n they see it: From humans to cinths, living things can repro- e and adapt over generations h an instructional genetic DNA e. Trees and bacteria can be e, but not a rock.

angton thinks it's possible that tly different forms of life have eloped on planets with different es of elements, temperatures, ospheres and distances from r suns.

d life elsewhere in the cosmos could be much more bizarre.

"We just have a single example" on Earth, Langton said. "The definition of life should be a list of behaviors, not a list of stuff. The material is im-

ngton

erial."

even Levy, author of the book, tificial Life," said the implica- of this new research go well nd the realm of science.

eople's thoughts veer toward ticism," he said. "At one point Earth there was no life. Nature sed the Rubicon, and nature us life. If there was a God, tools did he or she use, and if e was not a god, what was the em?"

ying to understand the deriva- of life really is an attempt to rstand ourselves, and the study rtificial life offers vital clues, gton said.

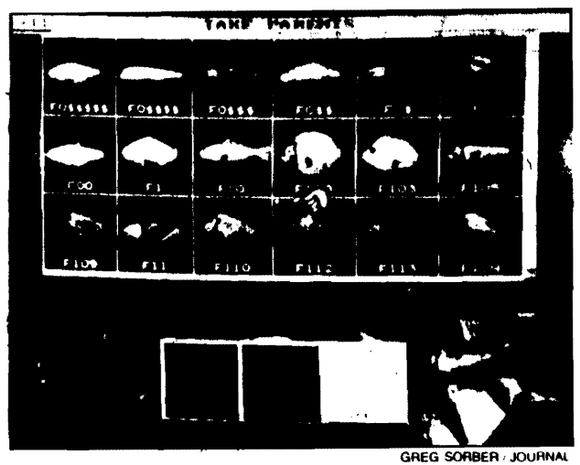

GREG SORBER / JOURNAL

Scientists at the Third Artificial Life Workshop were fascinated with this computer game that uses natural laws to let fish and other animals evolve and sometimes become extinct.

Langton, 43, an anti-war activist and self-taught computer hacker, said he became interested in artificial life while programming a computer at Massachusetts General Hospital.

While absorbed in his task, the program "Life" was running on a computer screen behind him.

"Life" was developed by John Horton Conway, a brilliant and eccentric mathematician who studied the abstract fringes of number theory. Conway employed the laws of physics to create stellar constellations within a computer that evolve and die in unpredictable patterns.

With stars dying behind him, Langton said his idea that computer programs had a life was born.

"At one point I got the feeling there was someone else in the room as if a friend of mine was going to come up and say, 'Boo,'" he said. "The hair on the back of my neck stood up. It got down past my rvous system. That caused me to nk about machines differently. I believe you can have real life inside a computer."

Langton has been named chief editor of a new scientific journal, "Artificial Life," which the Massachusetts Institute of Technology Press will start publishing next year.

Charles Taylor, a UCLA biology professor attending the conference, shook his head over Langton's life-in-a-computer belief.

"I don't know where to draw the boundary," he said.

Like others studying artificial life, Taylor said the research is as disturbing as it is exciting. Increasingly powerful computers, for example, could go from controlling their own behavior and that of robots to directing human behavior, from traffic to economies.

Within 20 years, Taylor said, computers will surpass the power of the human brain and could become 1,000 times more powerful after that.

"We may well be to computers what horses and dogs are to us," he said. "If control of information controls the world, that could be the computers."

Research involving artificial life could be equally beneficial.

Scientists now are using principles involved in artificial life to understand the immune system, ecology and other "complex adaptive systems" that Taylor said "seem to have a life of their own."

Waving to sun-drenched cottonwood trees outside, Steuart Kauffman, a biochemistry and biophysics professor at the University of Pennsylvania, said he and others are searching for an explanation of how and why simple systems give rise to complexity.

"A new arena of science is being born. Something is brewing, but none of us know quite what it is."