KONS-RGKU-92-01
Fermilab Library
0 1160 0015344 9

vity Group • Konstanz University
ory of Gravity | Quantum Theory ⟩

Preprint KONS-RGKU-92-01

Matter Wave Interferometry and why Quantum Objects are Fundamental for Establishing a Gravitational Theory†

Jürgen Audretsch*, Friedrich W. Hehl◇, and Claus Lämmerzahl*

**Department of Physics, University of Constance, D(W)-7750 Konstanz, Germany (e-mail: claus@spock.physik.uni-konstanz.de)*

and

◇Institute for Theoretical Physics, University of Cologne, D(W)-5000 Köln 41, Germany (e-mail: hehl@thp.uni-koeln.de)

ROUTE TO
NAME
LOCATION

†) To be published in: J. Ehlers, G. Schäfer (eds.): *Proceedings of the Bad Honnef School on Gravitation*, Lecture Notes in Physics, Springer-Verlag.

*) Supported by the Deutsche Forschungsgemeinschaft and the Commission of the European Community DG XII.

◇) Supported by the German-Israeli Foundation for Scientific Research and Development (GIF), Jerusalem and Munich.

Abstract

More recently, a number of interferometric experiments with electrons, neutrons, and atoms have been performed in the gravitational field of the earth and in non-inertial frames of reference. In atomic interferometry, additional high-precision experiments are expected to be done in the near future. The results obtained with electrons, neutrons, and atoms, respectively, can be understood by means of the Schrödinger or, in the polarized case, by means of the Pauli equation, both of which are coupled to the external gravito-inertial field. Based on the characteristic features read off from these experiments, one can set up a constructive axiomatic approach for establishing an appropriate spacetime geometry and can, independently, develop a gauge theoretical formalism for gravity. Both constructions make the Riemann-Cartan geometry of spacetime manifest. This geometry carries *torsion* as well as *curvature*. The Riemannian geometry of Einstein's gravitational theory can be recovered as a limiting case for the motion of classical point particles and light rays. We put the Dirac equation, formulated in a non-inertial frame of reference, into an arbitrary gravitational field represented by the spacetime geometry obtained. We compute the consequences for interferometric experiments and provide thereby a theoretical basis for future experiments.

Contents

1 Introduction

2 Experimental background

2.1 Interferometers

2.1.1 Electron

2.1.2 Neutron

2.1.3 Atom

2.2 Gravito-inertial experiments and their simple theoretical description

2.2.1 General formula for the phase shift

2.2.2 Effect of acceleration & gravity

2.2.3 Sagnac type effect

2.2.4 Spin-rotation coupling

2.2.5 Linearity of matter field equations

3 Consequences of matter wave interferometry

3.1 Superposition principle

3.2 Mass dependence of phase shift

3.3 Structure of the gravito-inertial coupling to the matter field

3.3.1. Point particles and the $m\vec{\nabla}\varphi_{grav}$-coupling

3.3.2. Different equivalence principles

3.3.3. Matter waves and minimal coupling

4 Constructive axiomatic approach to spacetime geometry

4.1 Establishing the matter field equation

4.2 Establishing the conformal structure

4.3 Establishing the Riemannian structure

4.4 Establishing axial torsion

5 Gauge approach to spacetime geometry

5.1 Poincaré invariance in Minkowski spacetime

5.2 First order Lagrangian of a matter field

5.3 Minimal coupling to gravity

5.4 Riemann-Cartan geometry of spacetime

6 Testing spacetime geometry by interference experiments

6.1 Conserved energy

6.2 Hamilton operator

6.3 Phase shift

7 Literature

1. Introduction

In these lectures we want to illustrate and to support the following thesis: Quantum objects are fundamental for the establishment of the structure of spacetime and thereby, also, for the theory of gravity.

To do so, we start our reasoning by drawing attention to the experimental foundations of the interaction between quantum objects and gravity. Today, matter wave interferometry with electrons, neutrons, and atoms provides an ever increasing number of experiments in which the influence of gravity and inertia on quantum objects can be studied in a very direct and precise way. A simple description of these fundamental experiments makes use of the Pauli equation in a homogeneous *gravitational* field and in a *non-inertial* frame of reference. There is presently still a big gap between this experimental level on the one hand side and the theoretical level at which gravity is quantized on the other hand side. But if one restricts oneself to classical gravity, it is possible to read off from the experimental results some characteristic traits on which a theory of the structure of classical spacetime can be founded.

Matter wave interferometry convincingly demonstrates the importance of gravity and inertia in the quantum domain. Accordingly, we need a corresponding theory which, however, presupposes a framework for the spacetime structure in the quantum domain. How can it be established? We know from the corresponding situation in classical physics that it would be unsatisfactory to put the postulate 'Spacetime obeys a Riemannian geometry' at the outset of a theory of spacetime. What we rather need is a physically conclusive reasoning which will eventually lead to a statement of this type. For classical physics, there have been many efforts to establish such a statement as a result of basic postulates related to the equivalence principle for classical matter fields or, in the constructive axiomatic approach, to the behavior of point particles and light rays. In experiments point particles and light rays are typically realized by satellites and radar signals and, conversely, they characterize the domain of application of this approach. It is evident that, for instance, the interior of the hydrogen atom including its nucleus cannot be explored in this way. On the other hand, to refer for the quantum domain once more to the postulate cited above, would be as unsatisfactory as it has already been in the classical domain. Instead, we have to take into account quantum mechanical experience right from the beginning. This is what we are going to do.

A further reason for this procedure is the following: There is a hierarchy within the theories of matter. Quantum physics is more fundamental than classical physics. The latter is contained in the former as a limiting case. Matter, classically described, such as satellites, stones, and other candidates for point particles, is composed of quarks, leptons, and their gauge bosons. The gravitational and inertial behavior of the complex objects should be a consequence of the behavior of the more elementary objects. It is therefore reasonable, if not compelling, to relate a theory of the structure of spacetime to the more fundamental theoretical framework of quantum mechanics, which means, by the same token, to base it on the more primitive objects, namely on the elementary particles. And this even more so, because the influence of gravity

on classically described matter can be derived, as a limiting case, from the more fundamental quantum approach.

This is not to be confused with the fact that quantum mechanical experiments are performed using classical measuring devices. For a quantum based constructive axiomatics, for example, only empirical facts will be used which can be read off in a geometry-free way.

Finally we mention still another reason for relying on quantum objects as primitive objects when exploring the structure of space-time: quantum objects, as compared to classical point particles and light rays, are the deeper searching probes. The interference experiments demonstrate that massive fields with spin couple to gravito-inertial fields in accordance with the strong equivalence principle. The experimental results depend on the parameters mass and spin. Based on this richer structure of the primitive objects, additional physical structures can be geometrized yielding more specific statements on spacetime geometry. For example, the torsion of spacetime can be "sensed" if spacetime is explored by particles carrying spin. This makes it implausible to restrict gravitational theory to the torsion-free Einstein theory from the outset without giving a physical justification for this restriction of vanishing torsion. Only after having established a theory of spacetime with torsion, one can try to look for experiments which may show that torsion is negligibly small in certain domains.

Guided by these heuristic considerations and founded on an empirical basis, the following two different procedures for establishing the geometrical structure of spacetime seem to be natural: (i) The gauge approach to gravity which represents the generic gravitational theory for quantum mechanical matter fields and which incorporates the equivalence principle in an essential way. Following Einstein, the structure and form of the gravitational potentials are read off in flat spacetime from the inertial forces arising in non-inertial frames. Following Cartan (1986), in a second step, arbitrary non-inertial reference frames are identified with a field of orthonormal (anholonomic) tetrads. (ii) The constructive axiomatics, as an alternative approach, does not refer to special relativity. Instead, nearly all elements of spacetime geometry are built up by reformulating as postulates experience largely gained from matter wave interferometry. Both approaches independently result in a *Riemann-Cartan* spacetime, carrying *torsion* as well as *curvature*, thus validating the thesis stated above.

The article is organized as follows: As experimental background, in Sect.2, matter wave interferometry is described with reference to the Pauli equation which is coupled to an external Newtonian gravitational field. In Sect.3, the fundamental physical consequences are pointed out. Based on this, in Sect.4, the constructive axiomatic approach and, in Sect.5, the gauge approach are concisely presented. Finally, in Sect.6, starting from the spacetime structure established, an approximation scheme is given for the description of interference experiments in gravitational and inertial fields. It can be used when searching for new measurable effects.

Acknowledgments: We are grateful to the W.&E.Heraeus-Stiftung and to Dr. Gerhard Schäfer for the invitation to present lectures at the Bad Honnef School on Gravitation.

For his conscientious reading of some parts of the manuscript, we would like to thank Prof. J. Dermott McCrea (Dublin); we also thank him for his permission to use some of his unpublished work [McCrea (1989)]. We also thank Dr. Olivier Carnal and Prof. Jürgen Mlynek (Konstanz) for helpful discussions and Prof. U. Bonse (Dortmund) and Dr. F. Hasselbach (Tübingen) for providing pictures of their apparatuses.

2. Experimental background

2.1. Interferometers

Interferometry belongs to the fundamental experiments in physics. By means of interferometry one can study the structure of the interferring light and matter waves as well as the type of interactions of these waves with external fields.

Interferometry of light waves has been known for quite some time. It can be described by means of the eikonal approximation of the Maxwell equations. Interferometry of matter waves can be understood only if one takes into account the quantum theory of matter (at least within a certain approximation). Therefore matter wave interferometry provides a tool for testing some principles of quantum theory as well as the influence of external fields on quantum matter.

Up to now there are three types of matter waves at our disposal(1) for which interference had been observed and which can be used to study the interaction with external fields. These are electrons, neutrons, and atoms. The corresponding interferometers are mostly of the Mach-Zehnder type, that is, there are spatially separated matter beams as, for instance, in the Bonse and Hart (1965) perfect crystal interferometer. Other types of interferometric setups are also possible, such as the atomic fountain setup of Kasevich and Chu (1991). Furthermore, by means of exciting trapped atoms, one can do interferometry of atoms which remain at the same place.

Electrons and neutrons are most conveniently described by means of the Pauli or the Dirac equation. Atoms are, of course, more complex objects and should be described in an n-particle approach. In some approximation, this yields a Pauli-type equation with magnetic and electric dipole moments or its respective relativistic version. This represents a center-of-mass motion with additional degrees of freedom. In the following we will restrict the external forces to gravitational and inertial forces, that is, we study the influence of the spacetime geometry on quantum matter.

Electrons are the first matter waves proper interferometry has been done with. Today charged particle interferometry is still based on electrons.

The advantages of *neutron interferometry* consist in the simplicity and the macroscopic dimensions of the interferometer. The comparatively large separation of the neutron beams provide a device to study quantum mechanics in macroscopic dimensions.

(1) As the earliest matter wave 'interferometer', sensitive to an external gravitational field, one may consider the $K^0\overline{K^0}$-meson system as described by Good (1961).

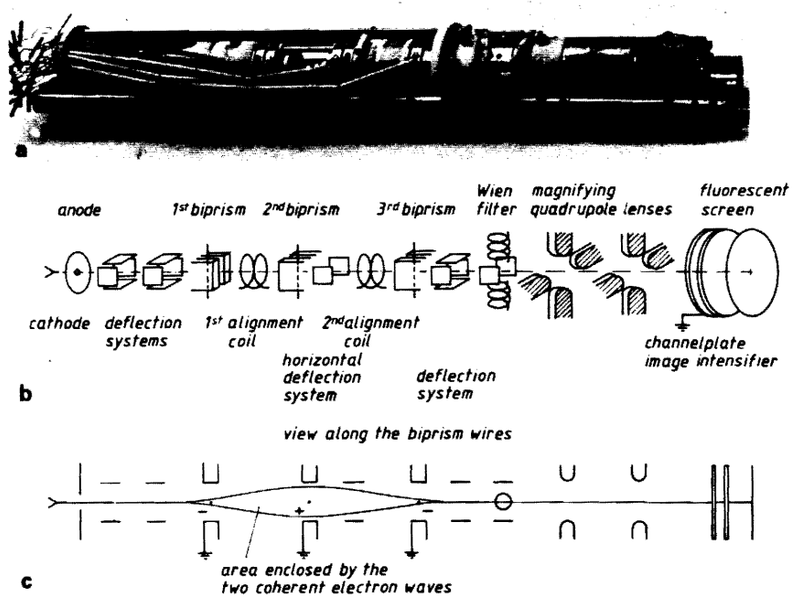

Figure 1. a) The triple biprism interferometer, b) the electron optical set up, c) the path of the electron beams [taken from Hasselbach and Nicklaus (1988)].

In comparison to neutron interferometry, *atomic beam interferometry* provides several advantages: (i) By means of laser cooling and trapping, atomic beams can be prepared with very low velocites, (ii) atoms have a larger mass and hence smaller deBroglie wavelengths [this together with (i) yields for a large class of interference experiments an increased accuracy], (iii) there are much more possibilitites to manipulate atomic beams because of their internal degrees of freedom, (iv) sources of atomic beams are much easier to handle, and (v) because of the internal degrees of freedom there are additional effects which may possibly be tested with atom beam interferometry based on new types of interferometer experiments. However, because of the low velocities of the atoms, the experiments are not well suited for testing relativistic effects.

2.1.1. Electron

Interference of electrons has first been observed by Marton *et al.* (1953) by using crystal plates as beam splitters where the electrons undergo Bragg scattering. An effective type of electron interferometer was built by Möllenstedt and co-workers (1954, 1961) using a triple biprism (see Fig.1). They achieved a beam splitting of about $100\,\mu m$ and a path length of about $10\,cm$. The electrons had an energy of 1 keV and hence a velocity of about $v \approx 0.06\,c$, where c is the velocity of light.

Also a double-slit interferometer for electrons has been built by Möllenstedt and Jönsson (1959).

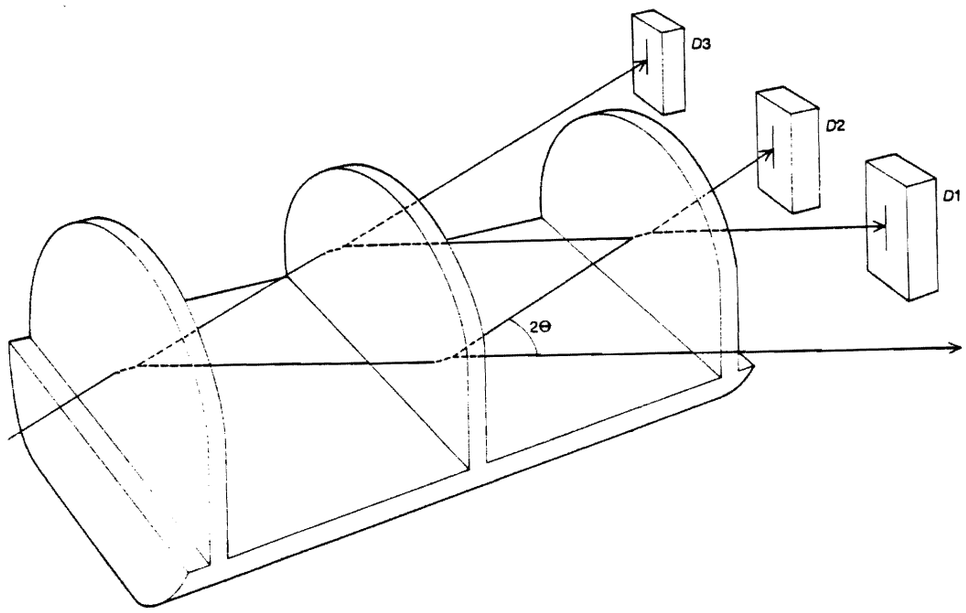

Figure 2. The single crystal interferometer for neutrons of Bonse and Hart (1965). The incoming neutron beam is spit at the first slab. The second slab serves as mirror and at the third slab the beam is recombined. The intensity of the interfering beams can be read off from the counters D1 and D2. Θ is the Bragg angle. D3 is a reference counter.

2.1.2. Neutron

The neutron interferometer designed by Rauch, Treimer, and Bonse (1974) is, because of its conceptual simplicity, a very successful interferometer for quantum matter waves. It demonstrates the wave aspect of matter on macroscopic scales.

The interferometer consists of a silicon single crystal (see Fig.2). Three slabs are cut from the crystal. The first two slabs serve as beam splitter and mirror, respectively, whereas the last one recombines the two beams such that the information related to the interference is coded onto the beams leaving the third slab of the interferometer. By means of this set-up, one does not observe any interference pattern directly as, for instance, in the case of a double slit experiment with light where the interference fringes are displayed on some screen. Instead, this neutron interferometer set-up is designed for observing phase shifts induced by varying external parameters, like the orientation in the gravitational field or the strength of some magnetic field influencing one of the neutron beams.

Neutron waves entering the crystal undergo Bragg scattering at the atomic planes. Within the crystal the neutron beams propagate perpendicular to the crystal face. When leaving the crystal they split into a forward and a backward beam.[2] The height and the length of the interferometer are of the order of 10 cm. This means that

[2] Actually, the propagation within the crystal is more complicated because there

one can do quantum mechanics on a macroscopic scale. The matter waves used are thermal neutrons with a wavelength of about $0.1\,\mu m$, which is equivalent to a velocity of about $2000\,m/s$. The coherence length of such a neutron is about $30\,\mu m$, whereas the extension of the wave packet is of the order of $1\,cm$.

A double slit set-up for neutron interferometry has been built by Klein *et al.* (1981) to confirm the Fizeau effect for neutrons.

2.1.3. Atom

Today there are five types of atomic beam interferometers working around the world.

(i) The first one, based on a double slit as mechanical beam splitter, was build by Carnal and Mlynek (1991) [see also Carnal (1992)]. The slit width is $1\,\mu m$ and the two slits are $8\,\mu m$ apart. The length of the path is about $1\,m$ (see Figs.3 and 4). Helium atoms are used with a velocity of $500\,m/s$.

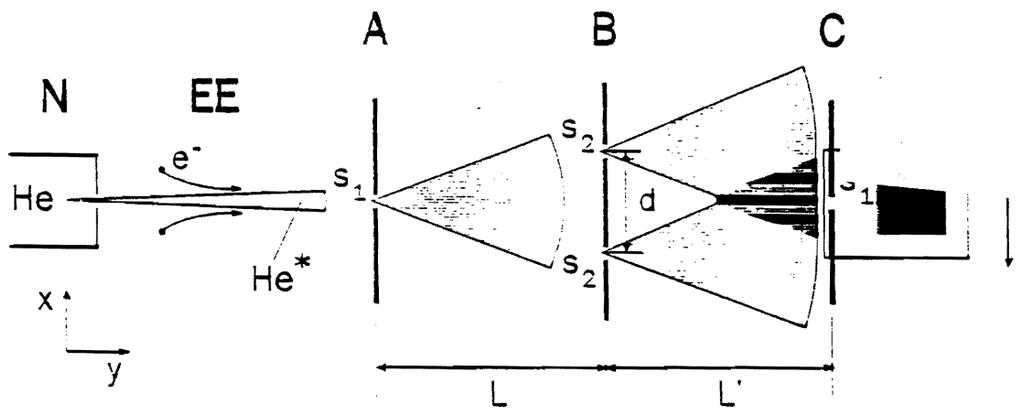

Figure 3. Schematic representation of the atomic beam interferometer of Carnal and Mlynek (1991). N: nozzle system and gas reservoir; EE electron impact excitation; A: entrance slit; B: double slit; C: detector screen: SEM: secondary electron multiplier. d=8 μm,L=L'=64cm.s_1=2 μm.s_2=1 μm.

(ii) Keith *et al.* (1991) took a grating as mechanical beam splitter with about the same geometric dimensions as the double slit.

(iii) Riehle *et al.* (1991) used a totally different device as beam splitter: As pointed out by Bordé (1989), one can use four travelling laser waves for transmitting to

---

are two slightly different propagation directions which, by interference, yield the so-called 'pendellösung'. Hence four beams leave one slab leading to eight possible paths within the interferometer, which all interfere at the last slab. Since the phase shifts as, for example, those induced by gravito-inertial effects, depend on the geometry of the paths, it influences the interpretation of the measuring data. This problem is still under investigation, see Horne (1986) and Werner and Kaiser (1990).

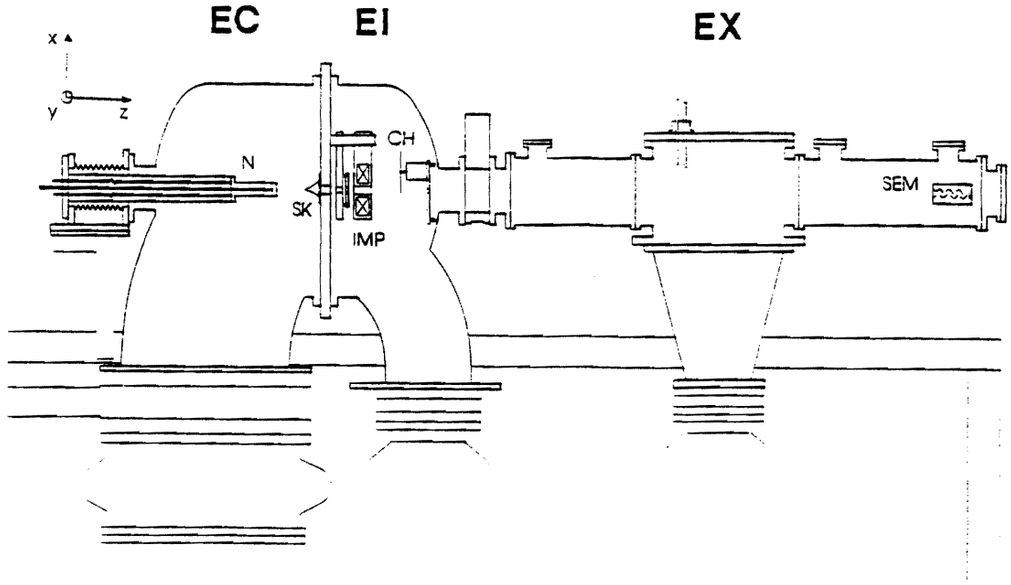

Figure 4. Experimental setup of the Carnal-Mlynek (1991) interferometer. EC: expansion chamber (N nozzle system, SK skimmer orifice); EI: electron impact excitation area; CH chopper (velocity selector); EX: experimental chamber (insertion of double slit, etc.); SEM: secondary electron multiplier.

the atoms well defined momenta. By resonant absorption and emission processes, energy and momentum is exchanged between atoms and photons (see Fig.5). A wave packet with momentum p and internal state $|a>$ is put at the splitter 1 into a superposition of states $|a, p_0>$ and $|b, p+\Delta p>$ by the momentum transfer

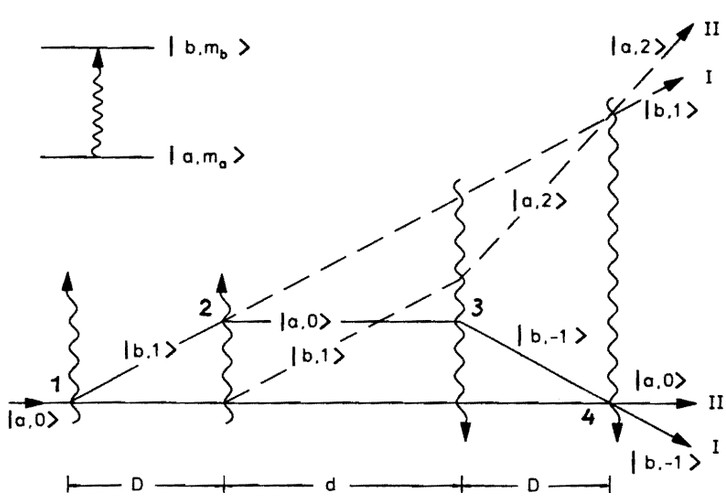

Figure 5. Beam splitting of an atomic beam by means of optical Ramsey excitation using four travelling laser fields. In the first (left) interaction zone the atomic matter wave is coherently split. The second and third interaction zones act as mirrors. In the last zone the beams recombine and interfere with one another [Bordé (1989)].

$\Delta p = \hbar k$ from the laser wave. After similar laser induced transitions $|b, p + \Delta p > \longrightarrow |a, p >$ and $|a, p > \longrightarrow |b, p - \Delta p >$ in points 2 and 3, the two atomic waves interfere at point 4 after interaction with a fourth laser beam. (A second possiblity is represented by the dashed lines in Fig.5. This optical beam splitter allows coherent separation and recombination of atomic beams. In the realisation of Riehle *et al.*, Calcium atoms are used with a velocity of about $700\,m/s$ and a momentum transfer of about $2 \times 10^{-28}\,kg\,m/s$ corresponding to a deflection angle of $22\,\mu$rad.

Note that because of the small beam separation it is not possible to put anything between the paths. However, because the position of the atom for the transitions between the internal states is not relevant, this configuration provides a high atomic beam flux.

The same type of interferometer, but using Magnesium atoms, has recently been built by Ertmer (1991).

(iv) Kasevich and Chu (1991) used Raman transitions of Sodium atoms to transmit a well defined momentum from the laser light to the atoms. They used laser cooled atoms with a temperature of 30 μK, which is equivalent to a velocity of $18\,cm/s$. They have done this for two configurations: the Mach-Zehnder and the atomic fountain configuration. Whereas in the Mach-Zehnder configuration the atom beams are spatially separated, the atoms move in one direction only in the fountain configuration (see Fig.6). They absorb and emit momenta from the laser light in the direction of motion in such a way that, before recombination, half of the atoms in the beam is travelling faster than the other half.

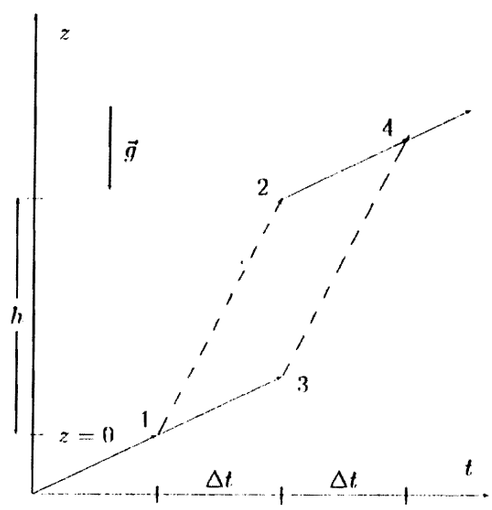

Figure 6. Space-time diagram of an atomic beam interferometer using an atomic fountain. Solid lines: state $|1,p>$. Dashed lines: state $|2,p+\Delta p>$.

(v) The most recent atomic beam interferometer was built by Shimizu, Shimizu, and Takuma (1992). They use ultra-cold $1s_3$ metastable Neon atoms the trajectories of which are determined only by the inital velocity of the atoms and by the gravitational acceleration (see Fig.7).

Other beam splitters and mirrors for atomic beams are under construction: Examples are beam splitters based on the Kapitza-Dirac effect [Kapitza and Dirac (1933)], on Bragg scattering of atoms from standing light waves [Martin *et al.* (1988)],

on the Stern-Gerlach effect [Miniatura *at al.* (1991)], or using the concept of velocity-tuned resonances [Glasgow *et al.* (1991)].

2.2. Gravito-inertial experiments and their simple theoretical description

In this section we describe the outcome of the interference experiments with the help of the simplest theory, that is, by means of the Pauli equation in a rotating and linearly accelerating frame under the influence of Newtonian gravitation. The measurability of the corresponding effects has been discussed for atomic beam interferometers by Clauser (1988) and Audretsch and Lämmerzahl (1992).

2.2.1. General formula for the phase shift

We use the Pauli equation as field equation for describing the propagation of matter waves with spin 1/2 in an external constant gravitational field $\vec{g}$:

$$i\hbar\frac{\partial}{\partial t}\psi = \left[-\frac{\hbar^2}{2m_i}\Delta + \varphi_{grav}\right]\psi = \left[-\frac{\hbar^2}{2m_i}\Delta - m_g\vec{g}\cdot\vec{r}\right]\psi\,. \tag{2.2.1}$$

Here we distinguish between the inertial mass m_i and the gravitational mass m_g. We transform to a frame with constant rotation $\vec{\omega}$ and linear accceleration $\vec{a}$. Then, to first order in $\vec{\omega}$ and $\vec{a}$, we find

$$i\hbar\frac{\partial}{\partial t}\psi = \left[-\frac{\hbar^2}{2m_i}\Delta + \vec{\omega}\cdot(\vec{r}\times i\hbar\nabla + \frac{\hbar}{2}\vec{\sigma}) - (m_g\vec{g} - m_i\vec{a})\cdot\vec{r}\right]\psi\,, \tag{2.2.2}$$

where $\vec{\sigma}$ represents the Pauli matrices.

The phase shift for a matter wave interference experiment can be calculated in the the semi-classical WKB approximation: $\psi = \varphi\exp\left(\frac{i}{\hbar}\phi\right)$, with $\nabla\varphi \sim 0$ and $\nabla\nabla\phi \sim 0$. Substitution of this ansatz into (2.2.2) yields

$$E\varphi = \left[\frac{p^2}{2m_i} + \vec{\omega}\cdot(\vec{L} + \vec{S}) - (m_g\vec{g} - m_i\vec{a})\cdot\vec{r}\right]\varphi\,, \tag{2.2.3}$$

with $\vec{L} := \vec{r}\times\vec{p}$ denoting angular momentum, $\vec{S}$ spin angular momentum, and $E := -\partial_t\phi$ and $\vec{p} := -\nabla\phi$ energy and momentum, respectively. We choose $\vec{r} = 0$ at the beam splitter.

An interference experiment must be done under quasi-stationary conditions, otherwise the interference fringes may wash out. For the theoretical description, however, we assume strict stationarity. Nevertheless, the results obtained may be used in order to describe adiabatic changes of parameters. In the calculation we take E to be constant. Now we solve (2.2.3) with respect to p and have, to first order in the interactions,

$$p = \sqrt{2m_i\left[E_{\rm kin} - \vec{\omega}\cdot\vec{L} + (m_g\vec{g} - m_i\vec{a})\cdot\vec{r}\right]} \approx p_0\left(1 - \frac{E_{\rm int}}{2E_{\rm kin}}\right)\,, \tag{2.2.4}$$

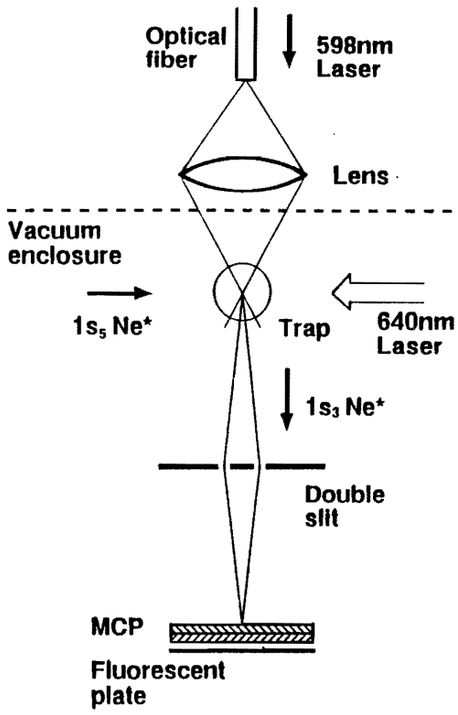

Figure 7. Experimental setup of the Shimizu *et al.* (1992) interferometer. After being trapped, the atoms fall freely through the double slit. The experiment is done for different positions (heights) of the screen (fluorescent plate).

with $E_{\rm kin} := \frac{p_0^2}{2m_i}$, $E_{\rm int} := \vec{\omega}\cdot(\vec{r}\times\vec{p}_0) + (m_g\vec{g} - m_i\vec{a})\cdot\vec{r}$, and p_0 being the modulus of the momentum of the matter wave at the position of the beam splitter.

Then the resulting phase shift in an interference experiment with symmetric paths is given by

$$\delta\phi = \frac{1}{\hbar}\oint \vec{p}\cdot d\vec{r} = -\frac{1}{\hbar}\oint E_{\rm int}dt\,, \qquad (2.2.5)$$

where dt has to be calculated from the classical path and the group velocity of the wave packet as determined by the plane wave solutions. Herewith we obtain the well-known formula [see Heer (1961), Overhauser and Colella (1974), Page (1975), Anandan (1977)]

$$\delta\phi = \frac{1}{\hbar}\oint\left[\vec{\omega}\cdot(\vec{r}\times\vec{p}_0) + (m_g\vec{g} - m_i\vec{a})\cdot\vec{r}\right]dt = \underbrace{\frac{1}{\hbar}\frac{(m_g g - m_i a)A}{v_0}}_{\text{grav.\& accel.effect}} + \underbrace{2\frac{m_i}{\hbar}\vec{\omega}\cdot\vec{A}}_{\text{Sagnac type effect}}\,, \qquad (2.2.6)$$

where A is the interferometer area. Note as characteristic results that even for $m_i = m_g$ the mass parameters do not drop out and that $\vec{g}$ and $\vec{a}$ have an equivalent influence.

The interaction energy $\vec{\omega}\cdot\vec{S}$ of (2.2.3) can only be observed if for one path a spin flip is imposed after splitting and before recombination of the two beams, see Mashhoon (1988).

Effects of tidal forces, that is space variations of the eath's gravitational field $\vec{g}$, seem to be too small to be detectable in the laboratory by present-day interferometers. Some detailed derivations are given in Sect.6.

2.2.2. Effect of acceleration & gravity

Using the neutron interferometer, the effect of the earth's gravitational field [eq. (2.2.6) for $\vec{a} = \vec{\omega} = 0$] has been measured by Colella, Overhauser, and Werner (1975). This is usually called the COW-experiment. Bonse and Wroblewski (1983) have obained exactly the same interference pattern in a reference frame accelerated with

$\vec{a} = \vec{g}$ [for $\vec{\omega} = 0$ and no influence of gravity] (see Fig.8). Assuming the equality of inertial and gravitational mass, $m_i = m_g$, this experiment proves the complete equivalence of acceleration and gravity as reflected in (2.2.4). Nevertheless, the effect remains mass dependent. This will be important for the subsequent discussion of the strong equivalence principle for matter fields.

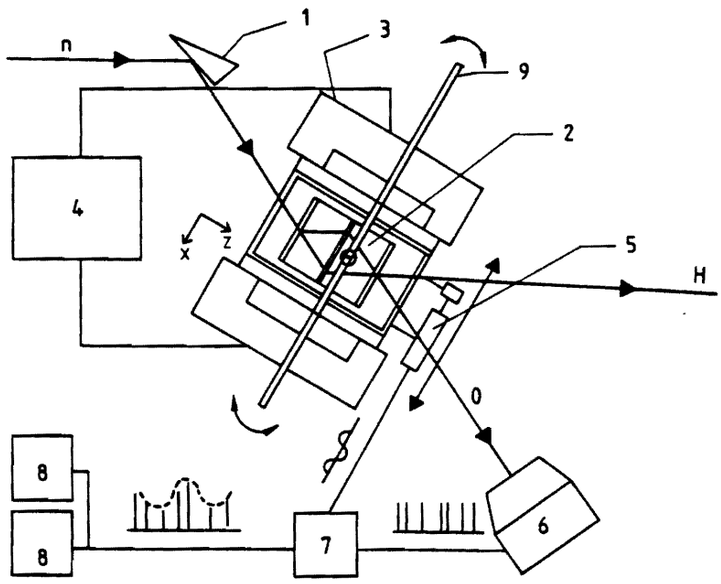

Figure 8. Experimental setup of Bonse and Wroblewski (1983). n: incoming neutron beam; 1: fore crystal; 2: interferometer on traverse; 3: loudspeaker magnets; 4: function generator; 5: position transducer; 6: neutron detector measuring the intensity; 7: position-to-pulse-height converter; 8: pair of single channel analyzer; 9: Al phase shifter.

Gravitational acceleration has also been observed for atomic beam interferometers by Kasevich and Chu (1991) and Shimizu, Shimizu, and Takuma (1992). Shimizu et al. measured by interference at a double slit the change of the deBroglie wavelength arising from the gain in energy during the free fall of the atoms in the earth's gravitational field (see Fig.9). In this way they tested not only the linear approximation in g but the complete expression,

$$\delta\phi = \oint E\sqrt{1 - \frac{2m_g\, g\, r}{m_i\, v_0^2}}\, dt\,, \tag{2.2.7}$$

which is a direct consequence of (2.2.3).

An important feature of this experiment is the fact that the center of mass of the wave packet moves in downward direction mass independently like a classical point particle ($\ddot{r} = -g$), i.e., in accordance with the weak equivalence principle ($m_i = m_g$). On the other hand, the double slit at the same time causes a quantum uncertainty to the vertical momentum component leading to a mass dependent interference pattern.

2.2.3. Sagnac type effect

The Sagnac effect for light has been verified by Michelson and Gale (1925). For matter wave interferometry, the Sagnac effect is a consequence of the coupling of the rotation of the reference frame to the angular momentum of the matter wave. For neutrons it was measured for the rotating earth by Werner *et al.* (1979) and for a rotating turntable by Atwood *et al.* (1984). Riehle *et al.* (1991) measured the influence of the rotation of a turntable on atomic beams. For electrons the effect was measured by Hasselbach and Nicklaus (1988, 1989, 1991).

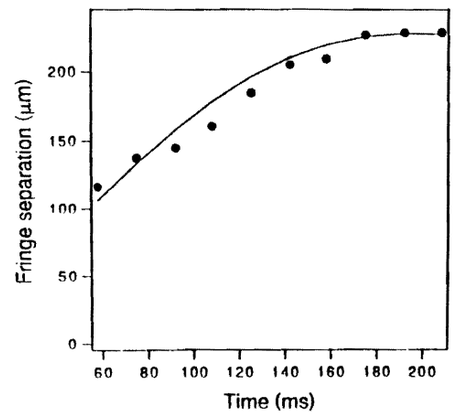

Figure 9. Fringe separation versus transit time of the atoms crossing the interferometer of Shimizu *et al.* (1992).

2.2.4. Spin-rotation coupling

On the non-relativistic level, by using matter wave interferometry, this coupling can only be measured by flipping the spin along one of the two paths. Let the length of the path, where the spin is in its flipped state, be Δl_{flip}. Then the phase shift will be

$$\delta\phi = \vec{\omega} \cdot \vec{S} \frac{\Delta l_{\text{flip}}}{v_0} . \tag{2.2.8}$$

This effect has not yet been detected. However, for neutron interferometry a phase shift of $10^{-2}\pi$ [Mashhoon 1988)] is expected and for the atomic fountain configuration of Kasevich and Chu (1991) a phase shift of π may be possible.

2.2.5. Linearity of matter field equations

In addition to the effects described by (2.2.6), we mention here a matter wave interference experiment which is important for the general structure of quantum mechanical field equations.

Into the Schrödinger equation non-linearities of the type $b \ln(|\psi|^2)\psi$, $b = const.$, have been introduced, which still allow to construct a conserved current. By bringing in attenuators at different positions into the neutron beams, Shull *et al.* (1980) found out that the parameter b, characterizing the strength of the non-linearity, has to be smaller than 4×10^{-13} eV.

3. Consequences of matter wave interferometry

Having the results of the interferometric experiments at hand, together with a simple theoretical description, we are now in a position to address the question of how to read off from these findings the appropriate description of the spacetime in which the matter fields propagate.

We will first turn our attention to the superposition principle and to the mass dependence of the phase shift of a matter field. These principles represent fundamental knowledge which is instrumental in a constructive approach to spacetime axiomatics. Then, more specifically, we will exploit the experimentally verified $\varphi_{grav}\psi$-coupling and compare it to the way a point particle couples to the gravito-inertial field. The relationship of the $\varphi_{grav}\psi$-coupling to the equivalence principle (EP) will be described in some detail.

3.1. Superposition principle

The linearity of quantum mechanics represents a very fundamental principle. In order to learn more about quantum mechanics. this principle has been questioned by Shimony (1979) and Weinberg (1989). amongst others. The experimental results, described in Sect.2.2.5, imply that matter waves are governed by linear field equations. Other types of experiments give even stronger estimates, see Physics Today The linearity of the field equations will be fundamental for establishing a spacetime structure by starting from quantum principles.

3.2. Mass dependence of phase shift

The phase shift in (2.2.6) is 'mass' dependent. Here 'mass' denotes a parameter m which is assigned to different types of matter fields. such as electrons or neutrons, for example.

If one used the same interferometer for different matter waves, the resulting phase shifts would differ in accordance to the 'mass' of the quantum objects. In particular, the positions of the interference fringes for different particle types can be compared without any reference to geometry. Results of this type we shall use in Sect.4.3.

What in point mechanics is called 'mass', attributes to a quantum object a certain property related to its wave character. The parameter m is essentially a proportionality factor between the phase shift $\delta\phi$ and the gravito-inertial field (multiplied by the interferometer area). Or, turning the argument around, one may *define* the mass of a matter wave by this kind of experiment.

3.3. Structure of the gravito-inertial coupling to the matter field

We now turn to the more specific form of the coupling to the gravito-inertial field. As shown above, it has been experimentally verified that the $\varphi_{grav}\psi$-coupling appropriately describes the behavior of a matter wave in an external gravitational field.

The Pauli equation (2.2.1), however, which we used in Sect.2.1.1 for the derivation of the general formula (2.2.6) for the phase shift, represents only the non-relativistic approximation of the gravitationally coupled Dirac equation. Consequently, we have to understand the coupling of gravity to the Dirac equation and how this is related to the way gravity influences the motion of a point particle according to Einstein's heuristic derivation of general relativity theory (GR).

3.3.1. Point particles and the $m\vec{\nabla}\varphi_{grav}$-coupling

Let us have a look at Table 1 (see next page). Consider a mass point with mass m and velocity $u^i := dx^i/ds = \gamma(1, \vec{v})$, where $\gamma := 1/\sqrt{1-v^2}$. In the flat Minkowski spacetime M_4, the point particle's force-free motion in an inertial frame of reference (i.e. in Cartesian coordinates) is governed by the equation

$$m\frac{du^i}{ds} \stackrel{*}{=} 0\,. \tag{3.3.1}$$

Observe that for the description of a world line $x^i = x^i(s)$ of a point particle (holonomic) coordinates x^i with $i, j, k \ldots = 0, 1, 2, 3$ is all we need from the geometrical backgroud. The natural (or coordinate) basis ∂_i, which is linked to the coordinates, will, however, not be sufficient for describing, say, a spinor field ψ in a non-inertial frame. Then we must turn to an orthonormal frame $\mathbf{e}_\alpha$ with (anholonomic) indices $\alpha, \beta, \gamma \ldots = 0, 1, 2, 3$. In general, $\mathbf{e}_\alpha$ will not be a natural frame, that is, the tetrad coefficients $e^i{}_\alpha$ in the decomposition $\mathbf{e}_\alpha = e^i{}_\alpha\, \partial_i$ will no longer be integrable. We will come back to this question in Sect.3.3.3.

The star on top of the equality sign in (3.3.1) means that the relation is valid only with respect to the specific basis under consideration, here an inertial reference frame represented by a (natural) Cartesian coordinate frame. In a non-inertial frame, eq.(3.3.1) becomes:

$$m\frac{du^i}{ds} + m\left\{ {i \atop jk} \right\} u^j u^k = 0\,. \tag{3.3.2}$$

The inertial forces emerge as additional terms $m\left\{ {i \atop jk} \right\} u^j u^k$ bilinear in the velocity u^i of the particle. For small velocities $v \ll 1$ and a static metric g_{ij}, which deviates from its inertial values $\eta_{ij} \stackrel{*}{=} \mathrm{diag}(-1, 1, 1, 1)$ only weakly, (3.3.2) yields

$$m\frac{d\vec{v}}{dt} + m\vec{\nabla}\left(\frac{g_{00}}{2}\right) \approx 0\,. \tag{3.3.3}$$

Table 1.

	Einstein's approach	**gauge approach**
elementary object in SR	mass point m	Dirac spinor $\psi(x)$
inertial frame	Cart.coord. x^i $ds^2 \stackrel{*}{=} \eta_{ij}\, dx^i dx^j$	orthon. hol. tetrads $e_\alpha = \delta^i_\alpha \partial_i, \quad e_\alpha \cdot e_\beta = \eta_{\alpha\beta}$
force-free motion in IF	$\frac{du^i}{ds} \stackrel{*}{=} 0$	$(i\gamma^i \partial_i - m)\psi \stackrel{*}{=} 0$
non-inertial frame	arb. curvilinear coord. $x^{i'}$	orthon. anhol. tetrads $e_\alpha = e^i{}_\alpha \partial_i$ coframe $\vartheta^\alpha = e_i{}^\alpha dx^i$
force-free motion in NIF	$\frac{du^i}{ds} + \left\{ {i \atop jk} \right\} u^j u^k = 0$	$[i\gamma^\alpha e^i{}_\alpha(\partial_i + \Gamma_i) - m]\psi = 0$ $\Gamma_i := \frac{1}{4}\Gamma_i^{\beta\gamma}\gamma_\beta\gamma_\gamma$
non-inertial objects	$\left\{ {i \atop jk} \right\}$ 40	$\vartheta^\alpha, \quad \Gamma^{\alpha\beta} = -\Gamma^{\beta\alpha}$ 16 + 24
constraints in SR	$R(\partial\{\},\{\}) = 0$ 20	$T(\partial e, e, \Gamma) = 0, \; R(\partial\Gamma, \Gamma) = 0$ 24 + 36
global IF	$g_{ij} \stackrel{*}{=} \eta_{ij}\,, \; \left\{ {i \atop jk} \right\} \stackrel{*}{=} 0$	$(e_i{}^\alpha, \; \Gamma_i^{\alpha\beta}) \stackrel{*}{=} (\delta_i^\alpha, 0)$
switch on gravity	$R \neq 0$ *Riemann*	$T \neq 0, \quad R \neq 0$ *Riemann − Cartan*
local IF	$g_{ij}\|_P = \eta_{ij}\,, \; \left\{ {i \atop jk} \right\}\|_P = 0$	$(e_i{}^\alpha, \; \Gamma_i^{\alpha\beta})\|_P = (\delta_i^\alpha, 0)$
field equations	$Ric - \frac{1}{2}tr(Ric) \sim mass$	$Ric - \frac{1}{2}tr(Ric) \sim mass$ $Tor + 2\; tr(Tor) \sim spin$

Accordingly, in Newtonian parlance, the Christoffel symbols $\left\{ {i \atop jk} \right\}$ subsume the gravitational field strength whereas the metric $g_{00}/2$, with a suitable additive constant, represents the gravitational potential.

In Newtonian mechanics, the equation of motion for a point particle with inertial mass m_i and gravitational mass m_g reads

$$m_i \frac{d\vec{v}}{dt} = -m_g \vec{\nabla} \varphi_{grav} \,. \tag{3.3.4}$$

If and only if the proportionality (in suitable units: equality) of inertial and gravitational mass is valid (weak equivalence principle, or weak EP), then (3.3.3) and (3.3.4) coincide, provided we have approximately

$$g_{00} \approx -1 + 2\,\varphi_{grav} \,. \tag{3.3.5}$$

This line of reasoning is represented in the 2nd column of Table 1 and, for historical reasons, named as "Einstein's approach". As is evident from (3.3.3) and (3.3.4), the $m\vec{\nabla}\varphi_{grav}$-coupling or, synonymously, the $m\{\ \}$-coupling, can be considered as its characteristic feature. And then the weak EP directly yields the universality of the free-fall, that is, the mass independence of the equation of motion (3.3.4) or (3.3.2), respectively; compare the discussion in Einstein (1955).

It should be clear, however, that even if the equation of motion is mass independent, the (time-independent) Hamilton-Jacobi equation for the point particle in the gravitational field

$$-\frac{\left(\vec{\nabla} S\right)^2}{2m_i} - m_g \vec{g} \cdot \vec{r} = E \tag{3.3.6}$$

does depend on the mass also after the application of the weak EP (Dehnen, private communication). The analogous effect is then expected to occur in Schrödinger type equations for matter fields.

3.3.2. Different equivalence principles

We applied in (3.3.4) the weak EP to a point particle. However, it should also be possible to formulate it for matter fields. Since a point particle is localized whereas a field is spread over spacetime, the EP has to be discussed separately for these two cases. Conventionally, an EP is called *weak*, if, within some theoretical framework, it leads to the universality of free fall (see Sect.3.3.1). It is called *strong*, if it implies a special form for the equation of motion of a point particle and for dynamical equations in general. We will use this terminology.

If we abstract from the Newton-Einstein type of equation of motion of Sect.3.3.1, then for a classical point particle the weak and the strong EPs read, respectively:

(i) In the absence of any interaction other than gravitation, point particles, with the same prescribed velocity in some point of spacetime, move along the same

path irrespective of their mass. This gives rise to a *path structure* of spacetime according to [cf. Ehlers and Köhler (1977) and Coleman and Korte (1980)]

$$\dot{u}^i + H(x,u) = \alpha\, u^i\,, \qquad u^i := \frac{dx^i}{d\lambda}\,, \tag{3.3.7}$$

for some parameter λ and some function α. In the context of Newtonian physics, this means the equality of inertial and gravitational mass.

(ii) Strong EP or the equivalence of gravity and acceleration: Locally, the acceleration caused by gravity can be transformed to zero for a point particle provided there are no fields present other than gravity. In other words, locally the point particle is not accelerated in some specific coordinate system and for some parametrization of the path: $\dot{u}^\mu \stackrel{*}{=} 0$. In the general-relativistic case, this leads to a *projective structure*,

$$\dot{u}^i + \Gamma_{jk}{}^i u^j u^k = \alpha\, u^i \tag{3.3.8}$$

for some connection $\Gamma_{jk}{}^i$.

3.3.3. Matter waves and minimal coupling

Turning now to matter waves, we will follow up the discussion of the 'gauge approach' column in Table 1. Taking a Dirac field in the Minkowski spacetime M_4 as the generic case, we have to study the Dirac equation in inertial and in non-inertial frames according to the standard formalism [cf.McCrea (1987, 1989)]:

A *spinor* field is linked essentially with the notion of orthonormality, since it derives ultimately from the representations of the Lorentz group. By contrast, a tensor can easily be generalized to linear transformations. To define a spinor field in an M_4, we need an *orthonormal reference frame* at each event, i.e. a basis of four vectors $\{\mathbf{e}_\alpha\}$ $(\alpha = 0,1,2,3)$ such that

$$g_{\alpha\beta} := g(\mathbf{e}_\alpha, \mathbf{e}_\beta) = \mathrm{diag}(-1,1,1,1). \tag{3.3.9}$$

The vector basis $\mathbf{e}_\alpha$ can be decomposed with respect to the tangent vectors ∂_i of the coordinate lines according to $\mathbf{e}_\alpha = e^i{}_\alpha\, \partial_i$. The 1-form basis ϑ^α will be defined, in the usual way, by

$$\vartheta^\beta(\mathbf{e}_\alpha) = \delta^\beta_\alpha. \tag{3.3.10}$$

Its decomposition reads $\vartheta^\beta = e_j{}^\beta\, dx^j$. In an M_4, both torsion and curvature vanish,

$$T^\alpha := d\vartheta^\alpha + \Gamma_\beta{}^\alpha \wedge \vartheta^\beta = 0, \qquad R_\alpha{}^\beta := d\Gamma_\alpha{}^\beta - \Gamma_\alpha{}^\gamma \wedge \Gamma_\gamma{}^\beta = 0, \tag{3.3.11}$$

with $\Gamma_\alpha{}^\beta = \Gamma_{i\alpha}{}^\beta dx^i$ as the connection 1-form and $\Gamma^{(\alpha\beta)} = 0$ (metricity). Therefore there exist global frames for which

$$\Gamma^{\alpha\beta} = 0 \tag{3.3.12}$$

and

$$d\vartheta^\alpha = 0. \tag{3.3.13}$$

These are the so-called inertial frames. By (3.3.13), such frames are holonomic in an M_4, i.e. there exist coordinates systems $\{x^i\}$ (spatial Cartesian coordinates + time) such that

$$\vartheta^\alpha = \delta^\alpha_i dx^i. \tag{3.3.14}$$

Thus, in an M_4, the Cartesian coordinate bases already provide us with the global orthonormal frames necessary for the description of spinor fields. However, for the transition to gravitational theory via the strong EP, we have to use non-inertial frames and these must be anholonomic ($d\vartheta^\alpha \neq 0$ and $\Gamma^{\alpha\beta} \neq 0$) if they are to remain orthonormal.

Let be given the Dirac equation in an inertial frame of reference $(i\gamma^i\,\partial_i - m)\psi \stackrel{*}{=} 0$. The γ^i denote the Dirac matrices fulfilling $\gamma^{(i}\,\gamma^{j)} = \eta^{ij}$. The important step consists in the transition to a non-inertial frame. And here we take recourse to the COW-experiment [Colella et al.(1975)] and to the BW-experiment [Bonse & Wroblewski (1983)], see the discussion in Sect.2.2.2. The COW-experiment verifies the $\varphi_{grav}\,\psi$-coupling of the Newtonian potential to the matter field, as given in (2.2.2). The BW-experiment, on the other hand, shows that the gravitational field in (2.2.2) can be simulated by means of a linear acceleration. The corresponding $(m_i\vec{a}\cdot\vec{r})\psi$-term, however, had been derived by formulating the Pauli equation with respect to an accelerated frame. Consequently, this procedure of transforming a matter field equation from an inertial into a non-inertial frame of reference has been verfied by COW in conjunction with BW. Needless to say that also the Sagnac term in (2.2.2), which we won by evaluating the Pauli equation on a turntable, belongs to the established results of matter wave interferometry, see Sect.2.2.3. In other words, the 'Mashhoon'-term is the only hypothetical one in (2.2.2).

Returning to the Dirac equation, we transform it into a non-inertial frame in an analogous way as we did it for the Pauli equation, namely by rotating the local frames $\mathbf{e}_\alpha$ into a non-inertial position. Thus we relax the conditions (3.3.12) and (3.3.13). This results in (see Table 1):

$$\Big[i\gamma^\alpha e^i{}_\alpha\big(\partial_i + \frac{1}{4}\Gamma_i{}^{\beta\gamma}\gamma_\beta\gamma_\gamma\big) - m\Big]\psi = 0\,. \tag{3.3.15}$$

We recognize that the gravitational potentials $e^i{}_\alpha$ (or $e_j{}^\beta$) and $\Gamma_i{}^{\beta\gamma}$, which become manifest in non-inertial frames, deviate from their inertial values

$$\Big(e_i{}^\beta,\, \Gamma_i{}^{\beta\gamma}\Big) \stackrel{*}{=} \Big(\delta^\beta_i,\, 0\Big)\,. \tag{3.3.16}$$

In other words, the $\Big(e_i{}^\beta,\, \Gamma_i{}^{\beta\gamma}\Big)$ describe the gravito-inertial field, or rather its potentials. In an M_4 the potentials can be 'trivialized' globally, since both torsion T^β and curvature $R^{\beta\gamma}$ vanish.

The leading additional terms, picked up by the Dirac equation in a non-inertial frame with $e^i{}_\alpha = \delta^i_\alpha + h^i{}_\alpha$ and $h^i{}_\alpha$, $\Gamma_i{}^{\beta\gamma} \ll 1$, read,

$$i\gamma^\alpha\Big[h^i{}_\alpha\,\partial_i + \delta^i_\alpha\frac{1}{4}\Gamma_i{}^{\beta\gamma}\gamma_\beta\gamma_\gamma\Big]\psi \approx \Big(ih^i{}_\alpha\,\gamma^\alpha\Big)\partial_i\psi + \Big(\frac{i}{4}\Gamma^{\alpha\beta\gamma}\gamma_\alpha\gamma_{[\beta}\gamma_{\gamma]}\Big)\psi\,. \qquad (3.3.17)$$

It is of the general type of coupling the matter wave function ψ to the gravitational potentials. In non-relativistic approximation, compare, for instance, Hehl *et al.* (1990, 1991) or Lämmerzahl (1991), it degenerates to the $\varphi_{grav}\psi$-coupling of (2.2.2). And this coupling has been experimentally verified, as we saw in Sect.2.2.2.

Instead of putting the Dirac equation into a non-inertial frame, as in Table 1 or in (3.3.15), we start in Sect.5 directly with the ordinary special-relativistic Dirac *Lagrangian.* In non-inertial frames, the Lagrangian picks up terms of the type given in (3.3.17). Thus for fields, the strong EP can be formulated as the *principle of minimal gravitational coupling* to the matter Lagrangian. It is no longer necessary to speak about objects which one observes directly, like the point particles in the Einstein approach, but rather about the corresponding material Lagrangian. Apparently, this version of the strong EP is general enough for accommodating matter fields carrying spin and the corresponding equations of motion for spinning particles [see Sexl & Urbantke (1983)]. A detailed presentation of this principle of minimal coupling has first been given by Sciama (1962).

To sum up: We only need to know the behavior of a (first order) Lagrangian in a *non-inertial reference frame*, then the coupling to gravity is determined. Violations of the strong EP would require the existence of non-minimal (Pauli type) terms in the Lagrangian containing the gravitational field strengths torsion and/or curvature explicitly. This ends our heuristic considerations.

4. Constructive axiomatic approach to spacetime geometry

We now turn to the first of the two independent procedures for establishing the geometrical stucture of spacetime: the constructive axiomatic approach to spacetime geometry using elements of quantum mechanics.

The aim of a constructive axiomatics is to discover and to describe the geometrical structure of spacetime by means of the behavior of appropriately selected physical systems, called *primitive objects*, and of particular physical effects, called *basic experience.* The intended final theorem is of the type: "If spacetime is the entity which dictates the particular primitive objects their typical behavior, then spacetime mathematically is ..." The method thereby is to enrich the manifold step by step with mathematical structures read off from experience. The postulates used must be formulated in a geometry-free manner. Our procedure will be analogous to the one followed by Ehlers, Pirani, and Schild (1972), who have used free point particles and light rays as primitive objects. Instead, we will use matter fields $\psi : \mathcal{M} \to \mathbf{C}^n$ as primitive objects. Mass and spin, as their degrees of freedom, will be essential in our scheme in order to establish the full richness of spacetime geometry. In the

following we will briefly summarize a simplified version of the scheme as developed by Audretsch and Lämmerzahl (1991a, b) and Lämmerzahl (1990):

4.1. Establishing the matter field equation

Because it is difficult to operationally justify from basic observations particular field equations for quantum objects (like the Dirac equation), we will start from the fundamental experience related to the dynamics of quantum matter fields. We will derive a general partial differential equation governing the dynamics of the matter field considered. It will turn out that the structure of this field equation is essentially determined by demanding a deterministic evolution with finite propagation speed as well as a superposition principle.

(i) We postulate a deterministic evolution of the field as an ordered behavior 'in time': There is a (1+3)-slicing of the 4-dimensional manifold $\mathcal{M}$ with monotonically increasing parameter t such that, given a field on some hypersurface, the field will be determined uniquely on a subsequent or 'later' hypersurface. The hypersurfaces for which this statement holds true are called spacelike.

(ii) For introducing the superposition principle, we require the evolution of an arbitrary sum of initial data to result in the sum of the separately propagated fields. Hence the evolution must be linear. One finds an abstract Cauchy problem $\frac{d}{dt}\psi_t = G_t\psi_t$, where ψ_t is the field ψ for fixed t and G_t the generator of the dynamical evolution. If as initial data derivatives of the field are needed in order to uniquely determine the field on a 'future' hypersurface, then we arrive at a higher order Cauchy problem, see Audretsch and Lämmerzahl (1991a).

(iii) According to experience, signals cannot propagate with infinite velocity. Therefore for all initial data with compact support we demand that, after some time, the propagated field still has compact support. This requirement implies for the generator G_t to be local. This has the important mathematical consequence that the evolutionary system reduces to a partial differential equation of first order

$$i\gamma^i(x)\partial_i\psi(x) - M(x)\psi(x) = 0\,, \tag{4.1.1}$$

where γ^i and M are some complex $n \times n$ matrices (not necessarily Dirac matrices). In addition, this first order system can be shown to be weakly hyperbolic, that is, the spacelike hypersurfaces are non-characteristic and all zeros of the characteristic equation $H(x,k) := \det(\gamma^i k_i) = 0$ are real; for a weaker version of postulate (iii), see Audretsch and Lämmerzahl (1991a).

(iv) The probability interpretation of quantum mechanics is based on a real current j^i which is bilinear in the fields. Its zeroth component j^0 is interpreted as probability density for finding a particle at a certain location. The only object in our theory which carries a contravariant vector index is γ^i. Therefore we require $j^i(x) = \psi^+ A\gamma^i\psi$ to be real for some matrix A and for all ψ's. This implies that $A\gamma^i$ is hermitian: $(A\gamma^i)^+ = A\gamma^i$.

4.2. Establishing the conformal structure

(v) The shock waves (that is, the singularities or characteristics) of the field equation (4.1.1) represent our first class of primitive elements. Jumps of lowest order along a hypersurface $\phi = 0$ obey

$$0 = A\gamma^i k_i a\,, \tag{4.2.1}$$

with some $a \in \mathbf{C}^n$ describing the helicity states on the hypersurface and $k_i = \partial_i \phi$. The solvability condition of (4.2.1) is the characterstic polynomial

$$H_c(x,k) = \det(A\gamma^i k_i) = g^{i_1 \cdots i_n} k_{i_1} \cdots k_{i_n} = 0\,, \tag{4.2.2}$$

with some real tensor $g^{i_1 \cdots i_n}$. Postulate (v) formalizes the experience that there is only one light cone at any point x (that is one future and one past light cone) and there are only two helicity states. The latter imply that the multiplicity of the zeros of the characteristic polynomial H_c must be two:

$$H_c(x,k) = \big(H_0(x,k)\big)^2\,. \tag{4.2.3}$$

The uniqueness of the light cone leads to

$$H_0(x,k) = g^{ij}(x) k_i k_j = 0\,. \tag{4.2.4}$$

Accordingly, $n = 4$ (that is, ψ has 4 complex components) and γ^i and M are 4×4-matrices.
The important consequence is that there must exist a class of real second rank tensors $g^{ij}(x)$. Because elements of this class of g^{ij} are fixed by the procedure given above only up to a positive scalar function, we are led to the notion of a conformal structure.These g^{ij} can be proven to be non-singular and to have signature ± 2. By means of the conformal structure we can construct orthotetrads e^i_a fulfilling $g_{ij} e^i_\alpha e^j_\beta = \eta_{\alpha\beta}$, where $\eta_{\alpha\beta}$ is the Minkowski metric. Therefore we are able to represent Lorentz-transformations.

4.3. Establishing the Riemannian structure

(vi) In the next step we return to (4.1.1). We select a special class of matter wave solutions, so-called approximate plane wave solutions, by making, according to the WKB-procedure. the ansatz $\psi = a \exp(iS)$. We demand that derivatives of a, that is, variations in the amplitude. are negligible. We then arrive at

$$0 = (\gamma^i p_i - M^{(0)})a\,, \tag{4.3.1}$$

$$i\gamma^i \partial_i a = M^{(1)} a\,, \tag{4.3.2}$$

for some 4×4-matrices $M^{(0)}$ and $M^{(1)}$. The solvability condition of the first equation gives a polynomial of fourth order in p, the Hamilton-Jacobi equation: $H(x,p) = (g^{ij} p_i p_j)^2 + \mathcal{O}(p^3) = 0$.

The subclass of *free* matter waves obeying (4.3.1) and (4.3.2) will be our second type of primitive elements. The property 'free' is represented by the requirement that $H(x,p) = 0$ exhibits the symmetry given by the conformal structure. Accordingly, if a momentum p is solution of the given Hamilton-Jacobi equation, then another momentum p', which results from the first one by an active Lorentz transformation $p' = Lp$, should also solve the Hamilton-Jacobi equation. By means of the fundamental theorem for vector invariants it follows that $H(x,p)$ must be of the form

$$H(x,p) = \left(g^{ij}p_ip_j - V_1(x)\right)\left(g^{ij}p_ip_j - V_2(x)\right), \tag{4.3.3}$$

with two *scalar mass functions* V_1 and V_2 and the metric g^{ij} as introduced above. Then $H_\kappa(x,p) = g^{ij}p_ip_j - V_\kappa(x) = 0$, $\kappa = 1,2$ gives the equation of motion for the group velocity $v^i = g^{ij}p_j$ of a wave packet. The mass functions $V_\kappa(x)$ turn out to be real.

(vii) Up to now it is not excluded that different types of quantum objects (denoted by the index λ), which all obey the aforementioned requirements, may lead to different scalar mass functions $V_{\lambda_\kappa}(x)$. Based on experience with matter wave interferometry, we require for free matter waves the following: For the same physical set-up (the same interferometer apparatus under identical conditions), we perform interference experiments at all points of spacetime with different quantum objects, such as electrons, neutrons, etc.. Then the pattern of the interference fringes, up to a constant factor, must be identical. This means that $V_{\lambda_\kappa} = m^2_{\lambda_\kappa}V_{1_1}$, with $m_{\lambda_\kappa} = const.$. Therefore dividing H_{λ_κ} by V_{1_1} and introducing $\bar{g}^{ij} := \frac{1}{|V_{1_1}|}g^{ij}$, we find $H_{\lambda_\kappa}(x,p) = \bar{g}^{ij}p_ip_j - m^2_{\lambda_\kappa}$. Causality requires m^2_κ to be positive. With $\bar{g}^{ij}$ we arrived at a *Riemannian metric.* Note that this does not mean that torsion is vanishing, it has simply not yet been established.

4.4. Establishing axial torsion

In the aforementioned reasoning we have used so far the properties of the Hamilton-Jacobi equation only. Using further properties of the matter fields, as displayed in equation (4.3.2) governing the differential behavior of the amplitude a, it is possible to introduce torsion [see e.g. Lämmerzahl (1990), compare Audretsch and Lämmerzahl (1987)]. For this purpose, from (4.3.2), we can derive an equation of motion for the amplitude a, which is of the form $v^i\partial_i a = v^i\Gamma_i(x)a$. In addition, we can show that the γ-matrices obey the Clifford algebra rule $\gamma^{(i}\gamma^{j)} = g^{ij}$ which the usual Dirac algebra can be derived from. Then one can prove that the only independent bilinear expressions are the probability current $\bar{\psi}\gamma^i\psi \sim v^i$ and the spin current $\bar{\psi}\gamma_5\gamma^i\psi$. By means of the propagation equation for the amplitude it follows that the propagation equation for the spin current reads

$$v^i(\overset{\{\}}{D}_iS^k + \epsilon_{ij}{}^{kl}K_lS^j) \sim S^k \tag{4.4.1}$$

for some axial vector K. Thus the propagation of the spin vector introduces an axial torsion.

To sum up, we have shown: *If spacetime is the entity which prescribes the behavior of the characteristics, of the free matter waves, and of the spin states in the way specified above, then spacetime is a Riemann-Cartan spacetime with axial torsion.*

By building wave packets out of free matter waves, it is possible to obtain the paths of the maxima of the wave packets thus introducing a path structure. These paths are the geodesics

$$v^j \partial_j v^i + \left\{ {i \atop jk} \right\} v^j v^k = \alpha v^i \tag{4.4.2}$$

of a Riemannian spacetime with the metric $\bar{g}_{ij}$ defined above. Indices are moved with $\bar{g}^{ij}$ and its inverse and the Christoffels are also built from this metric. Hence the equation of motion (4.4.2) is, with respect to the Christoffel connection, the same for all types of quantum objects. Therefore it defines a Riemannian spacetime. It demonstrates that the results of the axiomatics of Ehlers, Pirani, and Schild (1972) and, in addition, the restriction from Weyl geometry to a Riemann geometry [Audretsch (1983), and Audretsch, Gähler, and Straumann (1984)] is obtained as limiting case of our axiomatics based on matter fields.

In retrospect we can specify the elements of quantum mechanics which the appraoch is based on: They essentially agree with the elements which are necessary to physically describe matter wave interference.

5. Gauge approach to spacetime geometry

Having in the last section been led to a specific spacetime geometry by the axiomatic approach, which is itself based on experience extracted from matter wave interferometry, we are now turning our attention to a gauge approach of gravity. These considerations will be independent from those of Sect.4. However, a gauge approach is fundamentally based on the notion of a matter field and its invariance properties. In other words, the notion and the existence of matter waves (or fields) is the connecting element of both approaches. In this sense, they are *not* independent but rather both based on the quantum mechanical ψ-field. Accordingly, it is not by chance that the letter ψ (with an analogous meaning) features in Sect.4 as well as in Sect.5. In the following we will resume the considerations of Sect.3.3.

Soon after Yang and Mills (1954) coupled the conserved isospin current and its Noether-related SU(2)-invariance to their newly introduced B-gauge-field, Utiyama (1956, 1980) extended the Yang-Mills idea to other non-Abelian groups [see O'Raifeartaigh (1979)] and applied it, in particular, the the Lorentz group SO(1,3). In the context of 'gauging' the Lorentz group, Utiyama was able, using some additional hypotheses, to recover general relativity (GR). Since in Newton-Einstein gravity the source of the gravitational field is the mass, i.e. the momentum current, and the corresponding symmetry the *translation* invariance, clearly a gauging of the full Poincaré

group as the semidirect product of the translation group T_4 and the Lorentz group SO(1,3) was desirable. This was carried out by Sciama (1962) and Kibble (1961). They found that the Riemannian spacetime of GR must be enriched by a *torsion field* [Cartan (1986)] such that the connection remains metric-compatible, in other words the length of a vector, as in general relativity, still stays constant under parallel transport.

In the Sciama-Kibble approach [see also Trautman (1973, 1980) and Hehl *et al.* (1976)], which used structures investigated earlier by Cartan (loc.cit.), the analog of the Hilbert Lagrangian of the underlying Riemann-Cartan spacetime was used in the gravitational action function. As a consequence, the torsion field is confined to matter, i.e. in vacuo the spacetime remains Riemannian, as in general relativity. Subsequently gravitational models with propagating torsion were proposed, leading finally to a general framework of a Poincaré gauge theory with a gravitational Lagrangian quadratic in torsion and curvature.[3]

Here we will merely sketch the appropriate gauge field-theoretical formalism for a matter field, represented by a spinor- or tensor-valued p-form, interacting with the gravitational potentials (ϑ^α, $\Gamma^{\alpha\beta}$) of (3.3.16) using the calculus of exterior differential forms [see Thirring (1986)].

5.1. Poincaré invariance in Minkowski spacetime

Let us firstly suppose that there is no gravitational field and that consequently the spacetime is Minkowskian, or M_4. In an M_4 the group of motions is the $(4+6)$ parameter Poincaré group, which is generated by translations and Lorentz rotations. The state of a particle is associated with an irreducible unitary representation of the Poincaré group and is characterized by its mass and spin, as well as by its momentum.[4] If one realizes a representation of the Poincaré group by means of a matter field over a Minkowskian spacetime, the matter field $\psi(x)$ transforms as a spinor or tensor under Lorentz transformations, depending on whether we are dealing with a fermion or a boson, respectively. The spinorial matter field is fundamental — leptons and quarks are described in this way — and its characteristic features are essential in our later considerations.

---

[3] One may consult in this context the articles of Goenner (1987), Ivanenko & Sardanashvily (1983), Kibble & Stelle (1986), Kopczyński (1990), Lord & Goswami (1986), Meyer (1982), McCrea (1987, 1989), Mielke (1987), Ne'eman (1980), Ne'eman & Regge (1978), Nester (1984), and Hehl (1980).

[4] Compare, for example, the very clear and intuitive description of Sexl and Urbantke (1982).

5.2. First order Lagrangian of a matter field

The dynamical behaviour of fermionic and bosonic matter in an M_4 is determined by their Lagrangian 4-form L which we here refer to Cartesian coordinates and hence to the inertial frames of (3.3.14),

$$L \stackrel{*}{=} L(\psi, d\psi)\,, \tag{5.2.1}$$

where the p-form ψ is the matter field. In the sense of conventional Lagrangian field theory, L may depend at most on first derivatives of the matter field ψ. Via the action principle one finds the matter field equation depending at most on second derivatives:

$$\frac{\delta L}{\delta \psi} \equiv \frac{\partial L}{\partial \psi} - (-1)^p d(\frac{\partial L}{\partial d\psi}) = 0\,. \tag{5.2.2}$$

For an isolated system, i.e. if external fields do not act, the action function associated with (5.2.1) is invariant under Poincaré transformations. This implies, via Noether's theorem, the conservation of momentum and angular momentum:

$$d\Sigma_\alpha = 0, \qquad d\tau_{\alpha\beta} - \vartheta_{[\beta} \wedge \Sigma_{\alpha]} = 0\,, \tag{5.2.3}$$

where

$$\Sigma_\alpha = \mathbf{e}_\alpha \rfloor L - (\mathbf{e}_\alpha \rfloor d\psi) \wedge (\frac{\partial L}{\partial d\psi}) - (\mathbf{e}_\alpha \rfloor \psi) \wedge (\frac{\partial L}{\partial \psi}) \tag{5.2.4}$$

is the canonical (and asymmetric) energy-momentum 3-form and

$$\tau_{\alpha\beta} = G_{[\alpha\beta]}\psi \wedge (\frac{\partial L}{\partial d\psi}) \tag{5.2.5}$$

is the canonical spin angular momentum 3-form. If ψ is a 0-form then $\mathbf{e}_\alpha \rfloor \psi = 0$ and the last term of (5.2.4) drops. In equation (5.2.5) $G_{[\alpha\beta]}$ are the spin generating operators. The "inertial currents" (Σ_α, $\tau_{\alpha\beta}$) represent in field-theoretical language the particle's mass and spin — accordingly the appropriate names are *momentum* current and *spin* current, respectively. As is evident from (5.2.3) as well as from the labels of the irreducible unitary representations of the Poincaré group, the inertial behavior of, say, a fermion is not only characterized by its mass and its momentum current, but also a spin concept is necessary for a complete representation of the inertial properties of the fermion.

5.3. Minimal coupling to gravity

If we now introduce non-inertial reference frames in the M_4, (5.2.1) reads

$$L = L(\vartheta^\alpha, \psi, D\psi) = L(\vartheta^\alpha, \Gamma^{\alpha\beta}, \psi, d\psi) \tag{5.3.1}$$

with the covariant exterior derivative $D\psi := (d + \Gamma^{\alpha\beta} G_{\alpha\beta})\psi$. Tetrad and connection, but not their derivatives, appear explicitly in the Lagrangian.

As we saw in our discussion in Sect.3.3.3. the strong EP amounts to the following: Viewed locally, special relativistic matter in a non-inertial frame behaves in the same way as in a corresponding gravitational field.

To which quantity characterizing a matter field do we apply the strong EP? Certainly to the Lagrangian (5.3.1). Since the strong EP is a *local* principle we ought to apply it to the differentiation level of the lowest possible order. In general, the matter field equation (5.2.2) is of second differentiation order so that in the presence of a gravitational field curvature terms could already emerge. Moreover, we know that the Lagrangian enters explicitly the Feynman-quantization of matter fields and determines the transition amplitudes. Consequently in the theory of matter *fields* the Lagrangian possesses nearly the quality of an observable.

We stress again that in the original Einsteinian argumentation the EP has been applied directly to the acceleration or the equation of motion of a point particle, i.e. on the level of (5.2.2). We dispensed with the point particle concept and found only the level (5.2.1) or (5.3.1) suitable for the application of the EP. Consequently we indeed recognize $(\vartheta^\alpha,\ \Gamma^{\alpha\beta})$ as the *gravitational potentials.* According to (3.3.12) and (3.3.14), they can be globally trivialized in an M_4 since they are only induced by the choice of non-inertial reference frames.

5.4. Riemann-Cartan geometry of spacetime

Following McCrea (1989). the transition to gravitational theory is executed by requiring only the local validity of special relativity and of conditions (3.3.12) and (3.3.14):

$$(\vartheta^\alpha,\ \Gamma^{\alpha\beta}) \stackrel{*}{=} (\delta^\alpha_i dx^i,\ 0), \quad \text{locally.} \tag{5.4.1}$$

Thus we arrive at a Riemann-Cartan spacetime U_4 which is characterized by a local Minkowski metric (3.3.9) and a connection $\Gamma^{\alpha\beta}$ which is metric (compatible): $\Gamma^{(\alpha\beta)} = 0$. Its deviation from a Minkowskian M_4 is measured by the torsion T^α and the curvature $R^{\alpha\beta}$, which are both defined in (3.3.11). In fact, it is possible to prove that in a U_4, in a suitable tetrad and in suitable coordinates, condition (5.4.1) can always be fulfilled. Consequently, in such a 'local inertial system' the gravitational potentials are trivialized and can no longer be perceived, it represents the 'Einsteinian elevator' of the U_4. Now the Lagrangian (5.3.1) has its special-relativistic form only locally in a suitable tetrad. The constraints (3.3.11) may be relaxed since torsion and curvature cannot appear in the Lagrangian(5.3.1):

$$T^\alpha \neq 0, \qquad R_\alpha{}^\beta \neq 0. \tag{5.4.2}$$

Thereby we recognize torsion and curvature as *gravitational field strengths*, and a *Riemann-Cartan spacetime* U_4 emerges as appropriate for the description of gravitational phenomena. Thus. the gauge approach and the constructive axiomatic approach independently lead to the same result.

To support our line of reasoning, we add the following remarks: The strong EP is a heuristic principle, since the notion 'local' used in its formulation is not exact. In

exploiting the strong EP, we required stronger locality as compared to the one used in 'deriving' GR. The following procedure is also conceivable. We rewrite the constraint of vanishing torsion $(3.3.11)_1$ in terms of the connection

$$T^\alpha = 0 \iff \Gamma_{\alpha\beta} = \frac{1}{2}\{\mathbf{e}_\alpha\rfloor d\vartheta_\beta - \mathbf{e}_\beta\rfloor d\vartheta_\alpha - (\mathbf{e}_\alpha\rfloor\mathbf{e}_\beta\rfloor d\vartheta_\mu)\vartheta^\mu\}. \tag{5.4.3}$$

When this connection $\Gamma^{\alpha\beta} = \Gamma^{\alpha\beta}(\vartheta, d\vartheta)$ is substituted into (5.3.1), then, in non-inertial systems, L depends on ϑ^α as gravitational potential and only the constraint of vanishing curvature can be relaxed, whereas torsion remains zero. Accordingly one arrives at the Riemannian spacetime V_4 of GR. However, since it is always possible to make a tetrad and coordinate transformation at a point so that (5.4.1) is fulfilled at that point, it follows from (3.3.13) that in a V_4 the resulting tetrad satisfies the constraint $d\vartheta^\alpha = 0$ at the point, a constraint that is non-local and hence contrary to the spirit of the EP. Provided we do not wish to stay in the context of point particles and their trajectories in an 'Einsteinian elevator', there seems to be no reason for requiring the constraint $d\vartheta^\alpha = 0$. Hence everything speaks in favor of leaving the adjustment of torsion to the dynamics of the gravitational field and not to rule it out in the context of kinematics. Alternatively, one could have rewritten the constraint $(3.3.11)_2$ of vanishing curvature in terms of the connection:

$$R_\alpha{}^\beta = 0 \iff \Gamma^{\alpha\beta} \stackrel{*}{=} 0 \qquad \text{(globally)} \tag{5.4.4}$$

i.e. in the case of vanishing curvature there exist global parallel frames. Then, in a way analogous to above, we would have been led to a teleparallel spacetime T_4, i.e. to a U_4 with vanishing curvature. But a T_4 for fermions is no more convincing than the V_4 of GR. For a gravitational theory of *fermionic matter*, the U_4 with its 'Einstein elevator' (5.4.1), which is indispensable for a correct application of the strong EP, offers the appropriate geometrical framework, but for scalar or macroscopic matter a V_4 or a T_4 is already sufficient.

We complete our presentation with a short discussion of the appropriate Lagrange-Noether formalism. As in any other gauge theory, now that the interaction has been switched on by means of (5.4.2), the Lagrange-Noether formalism, which originally, in the 'pure gauge' case, leads to (5.2.2–5), has to be redone. By standard methods, we find in the U_4 the matter field equation

$$\frac{\delta L}{\delta\psi} = \frac{\partial L}{\partial\psi} - (-1)^p D\left(\frac{\partial L}{\partial D\psi}\right). \tag{5.4.5}$$

and the Noether identities

$$D\Sigma_\alpha = (\mathbf{e}_\alpha\rfloor T^\beta)\wedge\Sigma_\beta + (\mathbf{e}_\alpha\rfloor R^{\beta\gamma})\wedge\tau_{\beta\gamma}, \qquad D\tau_{\alpha\beta} - \vartheta_{[\beta}\wedge\Sigma_{\alpha]} = 0. \tag{5.4.6}$$

The new definitions of the momentum current

$$\Sigma_\alpha := \frac{\delta L}{\delta\vartheta^\alpha} = \mathbf{e}_\alpha\rfloor L - (\mathbf{e}_\alpha\rfloor D\psi)\wedge\frac{\partial L}{\partial D\psi} - (\mathbf{e}_\alpha\rfloor\psi)\wedge\frac{\partial L}{\partial\psi} \tag{5.4.7}$$

and of the spin current

$$\tau^{\alpha}{}_{\beta} := \frac{\delta L}{\delta \Gamma_{\alpha}{}^{\beta}} = G^{\alpha}{}_{\beta}\, \psi \wedge \frac{\partial L}{\partial D\psi} \tag{5.4.8}$$

show that these inertial currents are coupled to the corresponding gravitational potentials.

In an M_4, the Noether laws (5.4.6) reduce to (5.2.3). The volume force densities showing up on the right-hand side of the momentum identity in (5.4.6), namely (torsion $\times$ momentum) and (curvature $\times$ spin) i.e. (field strength $\times$ current) are remarkable. There is a close analogy here with the U(1)-gauge field theory (Maxwell's theory) where the Lorentz force is exactly of this type.

These Noether laws we will use in the following section for constructing a Conserved Energy-like quantity.

6. Testing spacetime geometry by interference experiments

In Sect.2.2.1, we had discussed the experimentally verified interference effects to lowest order. Based on results of Sect.5.4, we are now in a position to continue in a more rigorous fashion in order to include possible curvature and torsion effects. This can be done using a WKB-approximation of the Dirac equation [Audretsch and Lämmerzahl (1983)] or by deriving a Hamilton operator for the energy in a stationary spacetime using the energy-momentum current of the respective field. This last mentioned procedure mainly relies on Lämmerzahl (1992) using unpublished results of Hecht (1986) and of Hehl, McCrea, Mielke, and Ne'eman (1989). For other recent work one may consult Huang (1992).

6.1. Conserved energy

Let us take the Hamilton operator method which describes the energy of the considered quantum system in a curved spacetime for rotating and accelerating interferometers. We start from the general material Lagrangian (5.3.1), which is minimally coupled to the gravitational field. We suppose that the matter field equations (5.4.5) are fulfilled.

We assume the existence of a symmetry of spacetime, that is, of a Killing vector $\xi = \xi^{\alpha} \mathbf{e}_{\alpha}$ which fulfills the symmetry conditions

$$\mathcal{L}_{\xi} g = 0\,. \qquad \mathcal{L}_{\xi} \Gamma_{\alpha}{}^{\beta} = 0\,. \tag{6.1.1}$$

We introduce the abbrevations $D_{\alpha} := \mathbf{e}_{\alpha} \rfloor D$ and $D^{\beta} := g^{\beta\gamma} D_{\gamma}$ and the transposed connection $\widetilde{\Gamma}_{\alpha}{}^{\beta} := \Gamma_{\alpha}{}^{\beta} + \mathbf{e}_{\alpha} \rfloor T^{\beta}$ together with its covariant exterior derivative $\widetilde{D}$. Furthermore, we note for later use

$$\widetilde{D}_{\alpha} \xi^{\beta} = \overset{\{\}}{D}_{\alpha} \xi^{\beta} - \xi \rfloor K_{\alpha}{}^{\beta}\,, \qquad \text{with} \qquad K_{\alpha}{}^{\beta} := \overset{\{\}}{\Gamma}_{\alpha}{}^{\beta} - \Gamma_{\alpha}{}^{\beta}\,. \tag{6.1.2}$$

Here $K^{\alpha\beta} = -K^{\beta\alpha}$ denotes the contortion of spacetime. Then the symmetry conditions (6.1.1) can be rewritten as

$$\widetilde{D}^{(\alpha}\xi^{\beta)} = 0 \quad \text{or} \quad \overset{\{\}}{D}{}^{(\alpha}\xi^{\beta)} = 0\,. \qquad \text{and} \qquad D\widetilde{D}_\alpha\xi^\beta = -\xi\rfloor R_\alpha{}^\beta\,. \tag{6.1.3}$$

Note that the last relation is equivalent to $\mathcal{L}_\xi K_\alpha{}^\beta = 0$.

With these preparations we can find the energy expression $\mathcal{E}$ according to

$$d\mathcal{E} = 0\,, \qquad \mathcal{E} := \xi^\alpha\Sigma_\alpha + \left(\widetilde{D}_\alpha\xi^\beta\right)\tau^\alpha{}_\beta\,, \qquad E := \int_\Sigma \mathcal{E} = const.\,, \tag{6.1.4}$$

where Σ_α and $\tau^\alpha{}_\beta$ denote the material momentum and spin currents of (5.4.7) and (5.4.8), respectively. The conservation law $d\mathcal{E} = 0$ can be proved by applying the Noether identities (5.4.6) and the symmetry conditions (6.1.3). We always integrate over a space-like hypersurface Σ.

The transition to quantum mechanics is achieved by defining a scalar product by means of a conserved quantity. Accordingly, we additionally assume the Lagrangian to be invariant against phase transformations. This yields the conserved quantity

$$dj = 0 \qquad j(\bar\psi, \psi, x) := \psi \wedge \frac{\partial\mathcal{L}}{\partial D\psi} \qquad Q = \int_\Sigma j(\bar\psi, \psi, x)\,. \tag{6.1.5}$$

This construction will allow the definition of an energy operator in Sect.6.2.

Aa a simple example, we display the results for a Dirac field. Its Lagrangian depends only on the axial torsion. For the momentum, the spin, and the Dirac currents we find, respectively,

$$\Sigma_\alpha = \frac{i}{2}\left(\bar\psi\,{}^*\gamma D_\alpha\psi - D_\alpha\bar\psi\,{}^*\gamma\psi\right), \quad \tau^\alpha{}_\beta = -\frac{1}{8}\bar\psi\left\{{}^*\gamma\,, \sigma^\alpha{}_\beta\right\}\psi\,, \quad j = -\bar\psi\, i\,{}^*\gamma\psi\,, \tag{6.1.6}$$

where $*$ denotes the Hodge star and $\gamma := \gamma_\alpha\,\vartheta^\alpha$ the Dirac matrix 1-form; moreover, $\sigma_{\alpha\beta} = \frac{i}{2}[\gamma_\alpha, \gamma_\beta]$.

6.2. Hamilton operator

Explicitly, we introduce a scalar product by means of the current j of (6.1.5):

$$< \psi_1 \mid \psi_2 > := \int_\Sigma j(\bar\psi_1, \psi_2, x)\,. \tag{6.2.1}$$

A classical field observable $A_{\rm cl} := \int_\Sigma j(\bar\psi, \mathcal{A}_{\rm cl}\psi, x)$ is identified with the expectation value $A_{\rm qu}$ of a quantum measurement $A_{\rm qu} = < \psi \mid \widehat{\mathcal{A}}_{\rm qu} \mid \psi > = \int_\Sigma j(\bar\psi, \mathcal{A}_{\rm qu}\psi, x)$. Here $\mathcal{A}_{\rm qu}$ denotes the position representation of the quantum operator $\widehat{\mathcal{A}}_{\rm qu}$. This identification implies $\mathcal{A}_{\rm qu} = \mathcal{A}_{\rm cl}$.

Therefore the energy operator $\mathcal{H}$, using also (6.1.4), can be defined according to

$$\int_\Sigma j(\bar{\psi}, \mathcal{H}\psi, x) := E = \int_\Sigma \mathcal{E} = \int_\Sigma \left[\xi^\alpha \Sigma_\alpha + \left(\tilde{D}_\alpha \xi^\beta\right) \tau^\alpha{}_\beta\right]$$
$$= \int_\Sigma \left[\xi^\alpha n_\alpha (n^\beta \Sigma_\beta) + \xi^\alpha (k_\alpha{}^\beta \Sigma_\beta) + \left(\tilde{D}_\alpha \xi^\beta\right) \tau^\alpha{}_\beta\right], \qquad (6.2.2)$$

where we introduced the projection tensor $k_\alpha{}^\beta := \delta^\beta_\alpha - n_\alpha n^\beta$ of the hypersurface Σ with n as its normal. We can identify $n^\beta \Sigma_\beta$ as the energy flux density and $k_\alpha{}^\beta \Sigma_\beta$ as momentum flux density. Then the corresponding terms in (6.2.2) can be assigned to a suitably symmetrized operator expression $\frac{1}{2}\{\xi^\alpha, n_\alpha \mathcal{H}_0\}$ and $\frac{1}{2}\{\xi^\alpha, \mathcal{P}_\alpha\}$ in the conventional way. Moreover, we assign to the spin flux density $\tau^\alpha{}_\beta$ the operator $s^\alpha{}_\beta$. This yields the symmetrized Hamilton operator

$$\mathcal{H} = \frac{1}{2}\{\xi^\alpha, n_\alpha \mathcal{H}_0\} + \frac{1}{2}\{\xi^\alpha, \mathcal{P}_\alpha\} + (\tilde{D}_\alpha \xi^\beta) s^\alpha{}_\beta. \qquad (6.2.3)$$

Each term in this Hamiltonian is hermitian by construction. Note that the components of the canonical spin current describe the spin flux density, the spin density, the energy-dipole-moment flux density, and the energy-diplole-moment density [cf. Hehl (1976)].

According to (6.1.2), the last term in (6.2.3) splits into a spin-contortion term and a coupling of the spin to the kinematical properties of the Killing field ξ the trajectories of which later on will be identified with the trajectories of the different pieces of the interferometer.

The velocity u^i of these pieces is proportional to the Killing vector $\xi^i = e^\chi u^i$, with χ as the gravi-stationary potential. The projection tensor $h^j_i = \delta^j_i - u_i u^j$ transforms the vorticity $\partial_{[i} u_{j]}$ into the local rotation $\omega_{ij} := h^k_i h^l_j \partial_{[k} u_{l]}$. Eventually, the 'Christoffel' curl entering (6.2.3) can be decomposed according to $\overset{\{\}}{D}_{[i}\xi_{j]} = e^\chi(\omega_{ij} + 2a_{[i}u_{j]})$, where $a_i = u^j \overset{\{\}}{D}_j u_i = -\partial_i \chi$ denotes the acceleration of the Kiling field. Consequently, the spin of the matter wave couples to the acceleration and and to the rotation of the interferometer.

In particular, for the Dirac case the Hamiltonian (6.2.3) reads

$$\mathcal{H}_0 = m\gamma^i n_i + \frac{i}{2}\gamma^{[i}\gamma^{j]}\mathcal{P}_i n_j + \frac{1}{2}\overset{\{\}}{D}_i n^i, \quad \mathcal{P}_i = k_i{}^j \overset{\{\}}{D}_j, \quad s^{ij} = \frac{i}{8}\gamma^{[i}\gamma^{j]}. \qquad (6.2.4)$$

As special case we recover the Hamilton operator in flat Minkowski space. There, the most general Killing vector field $\xi^i = b^i + \omega^i{}_j x^j$ with $\omega_{ij} = -\omega_{ji}$ leads to

$$\mathcal{H} = \frac{1}{2}\{b^0 + \vec{a}\cdot\vec{r}, \mathcal{H}_0\}\psi - (\vec{b} + \vec{a}t)\cdot\vec{p}\psi + \vec{\omega}\cdot(\vec{L} + \vec{S})\psi, \qquad (6.2.5)$$

with the 3-acceleration $\vec{a} \leftrightarrow \omega^i{}_j n^j$ and the 3-rotation $\vec{\omega} \leftrightarrow -\epsilon^{ijkl}\omega_{jk} n_l$ and $\vec{a} \leftrightarrow \omega^i{}_j n^j$ [see Lämmerzahl (1991) and Hehl & Ni (1990)].

6.3. Phase shift

In an interference experiment the matter field is localized, that is, it is different from zero only within a comparatively small region. Hence, in (6.2.2) and (6.2.3), we can approximate both, the Killing vector, which represents the external gravitational field, and its derivative $\widetilde{D}\xi^\beta$ by a Taylor expansion. At the beam splitter we may choose the origin O of our coordinate system. The center of mass of the matter wave packet, the motion of which we will follow up, will be denoted by C. The difference 'vectors' $\Delta x := \overset{c}{x} - \overset{o}{x}$, $\delta x := x - \overset{c}{x}$ are defined to be tangent to the hypersurface Σ: $\Delta x \rfloor n = \delta x \rfloor n = 0$. Then the Taylor expansion around O reads, if we use the relations (6.1.3):

$$\xi^\alpha(x) = \xi^\alpha(\overset{o}{x}) + (\Delta x + \delta x)\rfloor(\overset{\{\}}{D}\xi^\alpha)(\overset{o}{x}) + \Delta x \rfloor \xi \rfloor \overset{\{\}}{R}_\beta{}^\alpha(\overset{o}{x})\delta x^\beta + \dots , \tag{6.3.1}$$

$$(\mathbf{e}_\alpha \rfloor \widetilde{D}\xi^\beta)(x) = (\mathbf{e}_\alpha \rfloor \widetilde{D}\xi^\beta)(\overset{o}{x}) + (\Delta x + \delta x)\rfloor \xi(\overset{o}{x}) \rfloor R_\alpha{}^\beta(\overset{c}{x}) + \dots . \tag{6.3.2}$$

In (6.3.1), we used the Christoffel derivative $\overset{\{\}}{D}$ since, in comparison with D, only higher order deviations are expected to arise in (6.2.2). Moreover, according to $(6.1.3)_2$, the Christoffel derivative is appropriate for the expansion of ξ. Consequently, $(6.1.3)_3$ motivates the use of D in expanding $\widetilde{D}\xi$. In (6.3.2), $R_\alpha{}^\beta(\overset{c}{x})$ will be replaced by $R_\alpha{}^\beta(\overset{o}{x})$, since $R_\alpha{}^\beta$, in the interferometer region, is assumed to be a slowly varying field. We also neglect products of the form $\delta x\, R \tau$.

We substitute (6.3.1) and (6.3.2) into (6.2.3). Then, to first order in the dimension of the extension δx of the field and in the distance Δx, the Hamiltonian reads:

$$\begin{aligned}
\mathcal{H} = {} & \xi(\overset{o}{x})\rfloor n\, \mathcal{H}_0 + (\overset{\{\}}{D}_\alpha \xi^\beta)(\overset{o}{x}) \left(\Delta x^\alpha n_\beta \mathcal{H}_0 + \frac{1}{2}\{\delta x^\alpha, n_\beta \mathcal{H}_0\} \right) \\
& + \Delta x \rfloor (\xi \rfloor \overset{\{\}}{R}_\alpha{}^\beta)(\overset{o}{x}) \frac{1}{2}\{\delta x^\alpha, n_\beta \mathcal{H}_0\} \\
& + \xi^\alpha(\overset{o}{x})\, \mathcal{P}_\alpha + (\overset{\{\}}{D}_\alpha \xi^\beta)(\overset{o}{x}) \left(\Delta x^\alpha \mathcal{P}_\beta + \frac{1}{2}\{\delta x^\alpha, \mathcal{P}_\beta\} \right) \\
& + \Delta x \rfloor (\xi \rfloor \overset{\{\}}{R}_\alpha{}^\beta)(\overset{o}{x}) \frac{1}{2}\{\delta x^\alpha, \mathcal{P}_\beta\} \\
& + s^\alpha{}_\beta \Big((\overset{\{\}}{D}_\alpha \xi^\beta)(\overset{o}{x}) - (\xi \rfloor K_\alpha{}^\beta)(\overset{o}{x}) + \Delta x \rfloor (\xi \rfloor R_\alpha{}^\beta)(\overset{o}{x}) \Big) + \dots .
\end{aligned} \tag{6.3.3}$$

We neglected products of the contortion with the rotation or the acceleration, respectively. The results of this and the last section were achieved recently, a more detailed analysis will be presented in a forthcoming publication.

Our procedure is especially appropriate for evaluating interference experiments. If we are going to describe an atom by such a matter field and if the external field is not so strong as to be able to extract an electron from an atom, then the matter field is always localized. The operator $\mathcal{P}_\alpha$ will be interpreted as momentum, $l^\alpha{}_\beta := \frac{1}{2}\{\delta x^\alpha, \mathcal{P}_\beta\}$ as orbital angular momentum. $\varepsilon_\alpha := n_\alpha \mathcal{H}_0$ as energy flux and $\varepsilon^\alpha{}_\beta :=$

$\frac{1}{2}\{\delta x^\alpha, n_\beta \mathcal{H}_0\}$ as energy dipole-moment. Therefore $L^{\alpha\beta} := \Delta x^{[\alpha}\mathcal{P}^{\beta]}$ represents the angular momentum and $E^{\alpha\beta} := \Delta x^{[\alpha}\varepsilon^{\beta]}$ the energy dipole-moment of the center of mass with respect to O. Furthermore, $j^\alpha{}_\beta := l^\alpha{}_\beta + \varepsilon^\alpha{}_\beta + s^\alpha{}_\beta$ is the total angular momentum and energy dipole-moment with respect to the center of mass C. Thus we find for the Hamiltonian:

$$\mathcal{H} = \xi^\alpha(\overset{o}{x})\,(\varepsilon_\alpha + \mathcal{P}_\alpha) + \mathcal{H}_{\text{int}}\,, \tag{6.3.4}$$

$$\begin{aligned}\mathcal{H}_{\text{int}} :=\ & \overset{\{\}}{D}_\alpha \xi^\beta(\overset{o}{x})\,(\ \underbrace{L^\alpha{}_\beta}_{\text{Sagnac}} + \underbrace{E^\alpha{}_\beta}_{\text{accel.}} + \underbrace{j^\alpha{}_\beta}_{\substack{\text{inertial spin}\\ \text{coupling}}}\ ) \\ &+ \underbrace{\Delta x\rfloor(\xi\rfloor \overset{\{\}}{R}_\alpha{}^\beta)(\overset{o}{x})\,(l+\varepsilon)^\alpha{}_\beta}_{\substack{\text{orbital angular momentum-}\\ \text{Riemann curvature}}} + \underbrace{\Delta x\rfloor(\xi\rfloor R_\alpha{}^\beta)(\overset{o}{x})\,s^\alpha{}_\beta}_{\text{spin-curvature}} - \underbrace{(\xi\rfloor K_\alpha{}^\beta)(\overset{o}{x})\,s^\alpha{}_\beta}_{\text{spin-torsion}}\,.\end{aligned} \tag{6.3.5}$$

The first term on the right hand side of (6.3.4) describes the energy and the translational momentum of the field with respect to the Killing field. In the second term $\mathcal{H}_{\text{int}}$, according to (6.3.5), the angular momentum and the energy dipole-moment of the total system are coupled to the rotation and acceleration of the Killing field. These terms result in the Sagnac type effect and its time-like analogue, the COW-effect. Additionally, spin plus orbital angular momentum, that is, the total angular momentum j, also couple to rotation and acceleration thereby generalizing the well known spin-rotation coupling [Schmutzer (1973), Collier (1977), Audretsch and Lämmerzahl (1983), Mashhoon (1988), Hehl & Ni (1990), Lämmerzahl (1991)]. The subsequent terms mediate the coupling of the orbital angular momentum to the Riemannian curvature as well as that of the spin of the matter field to the (total) Cartan curvature. The last term exhibits an explicit coupling between the material spin current to the contortion tensor. Note that only the spin current 'feels' torsion whereas all orbital terms react only to the Riemannian curvature, as worked out by Yasskin and Stoeger (1981).

For a pure *space-like* spin current (as in the case of Dirac matter) we introduce a more convenient notation by relating $s^\alpha{}_\beta \leftrightarrow \vec{S}$, $\omega^\alpha{}_\beta \leftrightarrow \vec{\omega}$, $a^\alpha \leftrightarrow \vec{a}$, $\xi\rfloor K_\alpha{}^\beta \leftrightarrow \vec{K}$, and $\Delta x \leftrightarrow \vec{x}$. Then we find, see Table 2, the lowest order inertial, curvature, and torsion effects of the matter field Hamiltonian (6.3.4).

The Hamilton operator can be used to calculate the outcome of an interference experiment with an interferometer of small extension. A particle beam is coherently split and brought to interference after having travelled along separate paths. The interferometer is assumed to travel along a Killing trajectory. For describing such experiments, the semi-classical approximation is appropriate. Accordingly, we assume that the field equation $\delta L/\delta\psi = 0$ possesses an approximate solution of the form $\psi \approx \varphi \exp(\frac{i}{\hbar}S)$, with S as the classical phase. Then, in the classical limit, the phase

shift for one round trip is given by [see Anandan (1977), Audretsch and Lämmerzahl (1983)]

$$\delta\Phi = \frac{1}{\hbar}\oint (e^{-\chi} E\, u_i\, dx^i + P_a\, dx^a) \approx \frac{1}{\hbar}\oint E_{\rm int} dt\,, \tag{6.3.6}$$

with $a = 1, 2, 3$. The energy E is the eigenvalue in $\mathcal{H}\psi = E\psi$. The expression $u_i dx^i$ is to be calculated according to the particle's group velocity, and $\vec{P}$ is the canonical momentum. Because E is constant by construction, we can simplify (6.3.6) somewhat:

$$\oint e^{-\chi} E\, u_i\, dx^i = E \int e^{-\chi}\, \omega_{ij}\, dA^{ij}\,. \tag{6.3.7}$$

However, it turns out to be very useful in some experiments (with spin-rotation coupling and spin-torsion coupling) to enforce a spin-flip after splitting and before recombining the matter wave [see Mashhoon (1988)]. In these cases E can be extracted from the integral only for certain parts of the path.

$m\,(\vec{a}\cdot\vec{x})$	Redshift (Bonse-Wroblewski $\rightarrow$ COW)
$-\vec{\omega}\cdot\vec{L}$	Sagnac type effect (Page-Werner et al.)
$-\vec{\omega}\cdot\vec{S}$	Spin-rotation effect (Mashhoon)
$\vec{p}\cdot(\vec{a}\cdot\vec{x})\,\vec{p}\,/\,(2m)$	Redshift effect of kin. energy
$\vec{S}\cdot(\vec{a}\times\vec{p})\,/\,(4m)$	Inertial spin-orbit coupling
$x\rfloor\xi\rfloor \overset{\{\}}{R}_\alpha{}^\beta\,(l+\varepsilon)^\alpha{}_\beta$	Orb.ang.mom.-{}-curvature coupling
$x\rfloor\xi\rfloor R_\alpha{}^\beta\, S^\alpha{}_\beta$	Spin-curvature coupling
$\vec{K}\cdot\vec{S} = \xi\rfloor K_\alpha{}^\beta\, S^\alpha{}_\beta$	Spin-torsion coupling

Table 2. Lowest order inertial. curvature, and torsion effects for a general matter field. The interior product is denoted by $\rfloor$.

After having performed one interference experiment, we cannot uniquely attribute parts of the total phase shift to the various terms in the Hamiltonian. Rather, we have to measure phase shifts under different physical situations. These can be realized, for example, by different boundary conditions (adiabatically changing the orientation of the interferometer) or by differently preparing the quantum system (selecting a system with a certain polarization or spin component).

If we insert the energy eigenvalues into the formulas of Table 2, we find a phase shift for each term. We denote the area of a COW-type interferometer by $\vec{A}$, its height by $\vec{h}$, and its length by l. Then we have explicitly:

$$\delta\Phi_{\rm acc} = \frac{mA}{\hbar v}\, a \qquad \text{acceleration effect}$$

$$\delta\Phi_{\rm Sagnac} = \frac{2m}{\hbar}\, \vec{\omega}\cdot\vec{A} \qquad \text{Sagnac (or rotation) coupling}$$

$$\delta\Phi_{\rm s-r} = \frac{2l_{\rm tot}}{v}\, \vec{\omega}\cdot\vec{J} \qquad \text{spin-rotation coupling}$$

$$\delta\Phi_{\rm s-o} = \frac{al}{c^2}\, J \qquad \text{inertial spin-orbit coupling}$$

$$\delta\Phi_{\rm o-c} = \frac{lh^a}{2\hbar v}\, \overset{\{\}}{R}_{0a\alpha}{}^{\beta}\, J^{\alpha}{}_{\beta} \qquad \text{orb.ang.mom.-}\{\}\text{-curvature-coupling}$$

$$\delta\Phi_{\rm s-c} = \frac{lh^a}{2\hbar v}\, R_{0a\alpha}{}^{\beta}\, S^{\alpha}{}_{\beta} \qquad \text{spin-curvature-coupling}$$

$$\delta\Phi_{\rm s-t} = \frac{l_{\rm tot}}{v}\, \vec{K}\cdot\vec{S} \qquad \text{spin-torsion coupling}$$

$$\delta\Phi_{\rm red} = \frac{v^2}{2c^2}\, \delta\Phi_{\rm acc} \qquad \text{redshift of kinetic energy}$$

The total phase shift is the sum of all of these contributions:

$$\delta\Phi = \delta\Phi_{\rm acc} + \delta\Phi_{\rm Sagnac} + \delta\Phi_{\rm s-r} + \delta\Phi_{\rm s-o} + \delta\Phi_{\rm o-c} + \delta\Phi_{\rm s-c} + \delta\Phi_{\rm s-t} + \delta\Phi_{\rm red} + \ldots . \qquad (6.3.8)$$

Here $l_{\rm tot}$ is the total length of the particle's path in the interferometer and J and S are the eigenvalues of the total angular momentum (with respect to the center of mass) and the spin angular momentum, respectively. The other terms in the Hamiltonian do not contribute to the phase shift. The spin-rotation, the spin-orbit, and the spin-torsion phase shifts are only nontrivial, provided the particle's spin had been inverted shortly after splitting and, again, shortly before recombining the particle beam [Mashhoon (1988)]. The inertial effects have also been derived by Hehl & Ni (1990) by transforming the special-relativistic Dirac equation into an accelerated and rotating frame. For the spin-curvature phase shift we oriented the interferometer in such a way that the covector $\xi\rfloor R_{\alpha}{}^{\beta} S^{\alpha}{}_{\beta}$ has the same direction as the acceleration in the COW-case.

The phase shift $\delta\Phi_{\rm acc}$ is the leading contribution caused by the redshift of the energy. Note that the inertial spin-orbit coupling does not depend on the mass nor on the velocity of the particle, but only on its spin. The remaining terms, up to now,

have not yet been experimentally verified. If we employ in an atomic interferometer atoms of atomic weight 40, intrinsic spin 1, and velocity $0.1\,m/s$, then, for an effective interferometer area of about $10^{-4}\,m^2$, the following phase shifts are of the order $\delta\Phi_{s-o} \approx 10^{-20}$, $\delta\Phi_{s-c} \approx 10^{-25}$. Thus they are not measurable today.

7. Literature

Anandan, J. (1977): Gravitational and Rotational Effects in Quantum Interference, *Phys. Rev.* **D15**, 1448.

Atwood, D.K., Horne, M.A., Shull, C.G., Arthur, J. (1984): Neutron Phase Shift in a Rotating Two-Crystal Interferometer, *Phys. Rev. Lett.* **52**, 1673.

Audretsch, J. (1983): The Riemannian Structure of Space-Time as a Consequence of Quantum Mechanics, *Phys. Rev.* **D27**, 2872.

Audretsch, J., Gähler, F., Straumann, N. (1984): Wave Fields in Weyl-Space and Conditions for the Existence of a Preferred Pseudo-Riemannian Structure, *Comm. Math. Phys.* **95**, 41.

Audretsch, J., Lämmerzahl, C. (1983): Neutron interference: general theory of the influence of gravity, inertia and space-time torsion, *J. Phys. A: Math. Gen.* **16**, 2457.

Audretsch, J., Lämmerzahl, C. (1987): Neutron Interference: Influence of the Mirror on the Spin, *Ann. Phys.* (Leipzig) **44**, 145.

Audretsch, J., Lämmerzahl, C. (1988): Constructive Axiomatic Approach to Space-Time Torsion, *Class. Quantum Grav.* **5**, 1285.

Audretsch J., Lämmerzahl, C. (1991a): Reasons for a physical field to obey partial differential equations, *J. Math. Phys.* **32**, 1354.

Audretsch, J., Lämmerzahl, C. (1991b): Establishing the Riemannian structure of space-time by means of light rays and free matter waves, *J. Math. Phys.* **32**, 2099.

Audretsch, J., Lämmerzahl, C. (1992): New Inertial and Gravitational Effects made measurable by Atom Beam Interferometry, *Appl. Phys.* **B**, in press.

Bonse, U., Hart, M. (1965): An X-Ray Interferometer, *Appl. Phys. Lett.* **6**, 155.

Bonse, U., Wroblewski, T. (1983): Measurement of Neutron Quantum Interference in Noninertial Frames, *Phys. Rev. Lett.* **51**, 1401.

Bordé, Ch.J. (1989): Atomic interferometry with internal state labeling, *Phys. Lett.* **A140**, 10.

Carnal, O. (1992): *Beam Splitter, Lens and Interferometer for Metastable Helium Atoms by Diffraction from Microfabricated Transmission Structures*, Ph.D. Thesis, ETH Zürich.

Carnal, O., Mlynek, J. (1991): Young's Double Slit Experiment with Atoms: A Simple Atom Interferometer, *Phys. Rev. Lett.* **66**, 2689.

Cartan, É. (1986): *On Manifolds with an Affine Connection and the Theory of General Relativity*, English translation of the French original (Bibliopolis, Napoli).

Clauser, J.F. (1988): Ultra-heigh sensitivity accelerometers and gyroscopes using neutral atom matter-wave interferometers, *Physica* **B151**, 262.

Colella, R., Overhauser, A.W., Werner, S.A. (1975): Observation of Gravitationally Induced Quantum Interference, *Phys. Rev. Lett.* **34**, 1472.

Coleman, R.A., Korte, H. (1987): Jet bundles and path structures, *J. Math. Phys.* **21** 1340.

Collier, R. (1977): Pauli equation for a particle in metric and electromagnetic fields, *Czech. J. Phys.* **B27**, 991.

Ehlers, J., Köhler, E. (1977): Path Structure on Manifolds, *J. Math. Phys.* **18**, 2015.

Ehlers, J., Pirani, F.A.E., Schild, A. (1972): The Geometry of Free Fall and Light Propagation, **in**: L. O'Raifeartaigh (ed.): *General Relativity, Papers in Honour of J.L. Synge* (Clarendon Press, Oxford).

Einstein, A. (1955): *The Meaning of Relativity*, 5th ed. (Princeton University Press, Princeton).

Ertmer, W. (1991): Seminar given at the University of Konstanz.

Glasgow, S.; Meystre, P.; Wilkens, M.; Wright, E.M. (1991): Theory of an atomic beam splitter based on velocity-tuned resonances, *Phys. Rev.* **A43** 2455.

Goenner, H. (1987): Report on Symposium "Alternative Theories of Gravitation", **in**: *General Relativity and Gravitation, Proc. 11th Int. Conf. General Relativity and Gravitation* (GR11), Stockholm 1986, M.A.H. MacCallum (ed.), (Cambridge University Press, Cambridge).

Good, M.L. (1961): K_2^0 and the Equivalence Principle, *Phys. Rev.* **121**, 311.

Hasselbach, F., Nicklaus, M. (1988): An Electron Optical Sagnac Effect, *Physica* **B 151**, 230.

Hasselbach, F., Nicklaus, M. (1989): Observation of the rotational phaseshift of electron waves (Sagnac effect), presented at the Conference on Foundations of Quantum Mechanics to celebrate 30 Years of the Aharonov-Bohm effect, Columbia, South Carolina.

Hasselbach, F., Nicklaus, M. (1992): The Sagnac Effect with Electron Waves, *in preparation.*

Hecht, R. (1986): *private communication.*

Heer, C.V. (1961): Interference of Electromagnetic and Matter Waves in a Nonpermanent Gravitational Field, *Bull. Am. Phys. Soc.* **6**, 58.

Hehl, F. W. (1976): On the Energy-Momentum-Tensor of Spinning Massive Matter in Classical Field Theory and General Relativity, *Rep. Math. Phys.* **9**, 55.

Hehl, F. W. (1980): Four lectures on Poincaré gauge theory, **in**: Proceedings of the 6th Course of the School of Cosmology and Gravitation on *Spin, Torsion, Rotation, and Supergravity*, held at Erice, Italy, May 1979, P. G. Bergmann, V. de Sabbata, eds. (Plenum, New York), p.5.

Hehl, F.W. (1985): On the Kinematics of the Torsion of Space-Time, *Found. Phys.* **15**, 451.

Hehl, F. W., von der Heyde, P., Kerlick, G.D., Nester, J.M. (1976): General relativity with spin and torsion: Foundations and prospects, *Rev. Mod. Phys.* **48**, 393.

Hehl, F. W., Lemke, J., Mielke, E.W. (1991): Two lectures on fermions and gravity, in: *Geometry and Theoretical Physics*, Proc. of the Bad Honnef School, J. Debrus and A.C. Hirshfeld, eds. (Springer, Heidelberg).

Hehl, F.W., McCrea, J.D., Mielke, E.W., Ne'eman, Y. (1989): Progress in metric-affine gauge theories of gravity with local scale invariance, Found. Phys. **19**, 1075; see also by the same authors: Metric Affine Gauge Theory of Gravity, *Phys. Rep.*, to be published.

Hehl, F. W., Ni, W.-T. (1990): Inertial effects of a Dirac particle, *Phys. Rev.* **D42**, 2045.

Horne, M.A. (1986): Neutron interferometry in a gravity field, *Physica* **B137**, 260.

Huang, J. (1992): Dirac Particle. Gravity, and Inertial Effects, *Preprint*, Institute of Astronomy, Cambridge University.

Ivanenko, D, Sardanashvily. G. (1983): The gauge treatment of gravity, *Phys. Rep.* **94**, 1.

Kapitza, P.L., Dirac, P.A.M. (1933): The reflection of electrons from standing light rays, *Proc. Cambr. Phil. Soc.* **29**, 297.

Kasevich, M., Chu, S. (1991): Atomic Interferometry using stimulated Raman Transitions, *Phys. Rev. Lett.* **67**, 181.

Keith, D.W., Ekstrom, C.R., Turchette, Q.A., Pritchard, D.E. (1991): An Interferometer for Atoms. *Phys. Rev. Lett.* **66**, 2693.

Kibble, T.W.B. (1961): Lorentz invariance and the gravitational field, *J. Math. Phys.* **2**, 212.

Kibble, T.W.B., Stelle, K.S. (1986): Gauge Theories of Gravity and Supergravity, **in**: *Progress in Quantum Field Theory*. H. Ezawa and S. Kamefuchi, eds. (Elsevier, Amsterdam), p.57.

Klein, A.G., Opat, G.I., Cimmino, A., Zeilinger, A., Treimer, W., Gähler, R. (1981): Neutron propagation in moving matter: The Fizeau Experiment with Massive Particles, *Phys. Rev. Lett.* **24**, 1551.

Kopczyński, W. (1990): Variational Principles for Gravity and Fields, *Ann. Phys.* (N.Y.) **203**. 308.

Lämmerzahl, C. (1990): The Geometry of Matter Fields, **in**: Audretsch, J., deSabbata, V. (eds.): *Quantum Mechanics in Curved Space-Time* (Plenum Press, New York).

Lämmerzahl, C. (1991): A Hamilton Operator of the Dirac Field for Rotating and Accelerating Observers, *Preprint*, University of Konstanz.

Lämmerzahl, C. (1992): A Hamilton Operator for Matter Fields and Matter Wave Interferometry, *Preprint*. University of Konstanz.

Lord, E.A., Goswami, P. (1986): Gauge theory of a group of diffeomorphisms. I. General principles. *J. Math. Phys.* **27**, 2415.

Martin, P.J., Oldaker, B.G., Miklich, A.H., Prichard, D.E. (1988): Bragg Scatttering of Atoms from a Standing Light Wave, *Phys. Rev. Lett.* **60**, 515.

Marton, L., Simpson, J.A., Suddeth, J.A. (1953): Electron Beam Interferometer, *Phys. Rev.* **90**, 490.

Mashhoon, B. (1988): Neutron Interferometry in a Rotating Frame of Reference, *Phys. Rev. Lett.* **61**. 2639.

McCrea, J.D. (1987): Poincaré gauge theory of gravitation: foundations, exact solutions and computer algebra, **in**: *Proceedings of the 14th Int. Conference on Differential Geometric Methods in Mathematical Physics, Salamanca 1985*, P.L. García and A. Pérez-Rendón, eds., Lecture Notes in Mathmatics, Vol. **1251** (Springer, Berlin), p.222.

McCrea, J.D. (1989): Beyond General Relativity: Theories of Gravitation with Dynamic Torsion. Unpublished manuscript, University College Dublin.

Meyer, H. (1982), Møller's Tetrad theory of gravitation as a special case of Poincaré gauge theory – a coincidence? *Gen. Rel. Grav.* **14**. 531.

Michelson, A.A., Gale. H.G. (1925): The Effect of the Earth's Rotation on the Velocity of Light, *Nature* **115**, 566.

Mielke, E.W. (1987): *Geometrodynamics of Gauge Fields* – On the geometry of Yang-Mills and gravitational gauge theories (Akademie-Verlag, Berlin).

Miniatura, Ch., Perales, F., Vassilev, G., Reinhardt, J., Robert, J., Baudon, J. (1991): A longitudinal Stern-Gerlach interferometer: the "beaded" atom, *J. Phys. II* (France) **1** 425.

Möllenstedt, G., Bayh, W. (1961): Elektronen-Biprisma-Interferenzen mit weit getrennten kohärenten Teilbündeln, *Naturwissenschaften* **48**, 400.

Möllenstedt, G., Düker. H. (1954): Fresnelscher Interferenzversuch mit einem Biprisma für Elektronenwellen, *Naturwissenschaften* **42**. 41.

Möllenstedt, G., Jönsson, C. (1959): Elektronen-Mehrfachinterferenzen an regelmäßig hergestellten Feinspalten, *Z. Phys.* **155**, 472.

Ne'eman, Y. (1980): Gravity, groups and gauges, **in**: *General Relativity and Gravitation. One Hundred Years after the Birth of Albert Einstein*, A. Held ed.(Plenum Press, New York). Vol. 1, Chap. 10.

Ne'eman, Y., Regge, T. (1978): Gravity and supergravity as gauge theories on a group manifold, *Phys. Lett.* **B74**, 54; Gauge theory of gravity and supergravity on a group manifold *Riv. Nuovo Cimento* **1** **N5**, Ser. 3.

Nester, J. (1984): Gravity, Torsion and Gauge Theory, **in**: *Introduction to Kaluza-Klein theories*, H.C. Lee, ed. (World Scientific, Singapore), p. 83.

O'Raifeartaigh, L. (1979): Hidden Gauge Symmetry, *Rep. Prog. Phys.* **42**, 159.

Overhauser, A.W., Colella, R. (1974): Experimental Test of Gravitational Induced Quantum Interference, *Phys. Rev. Lett.* **33**, 1237.

Page, L.A. (1975): Effect of Earth's Rotation in Neutron Interferometry, *Phys. Rev. Lett.* **35**, 543.

Rauch, H., Treimer, W., Bonse, U. (1974): Test of single crystal neutron interferometer, *Phys. Lett.* **A47**. 369.

Physics Today (1989): October, p.20.

Riehle, F., Kisters, Th., Witte, A., Helmcke, J., Bordé, Ch.J. (1991): Optical Ramsey Spectroscopy in a Rotating Frame: Sagnac Effect in a Matter Wave Interferometer, *Phys. Rev. Lett.* **67**, 177.

Schmutzer, E. (1973): Maxwell-Theorie (in Medien) und Quantentheorie in einem rotierenden Bezugssystem, *Ann. Phys.* (Leipzig) **29**, 75.

Sciama, D.W. (1962): On the analogy between charge and spin in general relativity, **in**: *Recent developments in general relativity* (Pergamon, Oxford), p.415.

Sexl, R.U., Urbantke, H.K. (1982): *Relativität, Gruppen, Teilchen*, 2nd ed. (Springer, Wien).

Sexl, R.U., Urbantke, H.K. (1983): *Gravitation und Kosmologie*, 2nd ed. (Bibliographisches Institut, Mannheim 1983).

Shimizu, F., Shimizu, K., Takuma, H. (1992): Double slit interference with ultracold metastable neon atoms, *preprint*, University of Tokyo.

Shimony, A. (1979): Proposed neutron interferometer test of some nonlinear variants of wave mechanics, *Phys. Rev.* **A20**, 394.

Shull, C.G., Atwood, D.K., Arthur, J., Horne, M.A. (1980): Search for a non-linear variant of the Schrödinger equation, *Phys. Rev. Lett.* **44**, 765.

Thirring, W. (1986): *Classical Field Theory*, A Course in Mathematical Physics 2, 2nd ed.(Springer, New York).

Trautman, A. (1973): On the structure of the Einstein-Cartan equations, **in**: *Differential Geometry*, Symposia Matematica Vol.12 (Academic Press, London) p.139.

Trautman, A. (1980): Fiber bundles, gauge fields and gravitation, **in**: *General Relativity and Gravitation. One Hundred Years after the Birth of Albert Einstein*, A. Held ed.(Plenum, New York), Vol.1, Chap.9, pp.287-308.

Utiyama, R. (1956): Invariant theoretical interpretation of interaction, *Phys. Rev.* **101**, 1597.

Utiyama, R. (1980): Introduction to the theory of general gauge fields, *Prog. Theor. Phys.* **64**, 2207.

Weinberg, S. (1989): Testing Quantum Mechanics, *Ann. Phys.*(N.Y.) **194**, 336.

Werner, S.A., Kaiser, H. (1990): Neutron Interferometry – Macroscopic Manifestations of Quantum Mechanics, **in**: Audretsch, J., deSabbata, V.: *Quantum Mechanics in Curved Space-Time* (Plenum Press, New York), pp 1-21.

Werner, S.A., Staudenmann, J.-L., Colella, R. (1979): Effect of Earth's Rotation on Quantum Mechanical Phase of the Neutron, *Phys. Rev. Lett.* **42**, 1103.

Yang, C.N. and Mills, R.L. (1954), Conservation of isotopic spin and isotopic gauge invariance, *Phys. Rev.* **96**, 191.

Yasskin P.B., Stoeger, W.R. (1980): Propagation equations for test bodies with spin and rotation in theories of gravity with torsion, *Phys. Rev.* **D21**, 2081.