JAERI-Tech
99-055

DESIGN OF REMOTE HANDLING EQUIPMENT FOR THE ITER NBI

August 1999

Kiyoshi OKA and Eisuke TADA

RETURN TO PERSONAL LIBRARY

日本原子力研究所
Japan Atomic Energy Research Institute

本レポートは，日本原子力研究所が不定期に公刊している研究報告書です。
入手の問合わせは，日本原子力研究所研究情報部研究情報課（〒319－1195 茨城県那珂郡東海村）あて，お申し越しください。なお，このほかに財団法人原子力弘済会資料センター（〒319－1195 茨城県那珂郡東海村日本原子力研究所内）で複写による実費頒布をおこなっております。

This report is issued irregularly.
Inquiries about availability of the reports should be addressed to Research Information Division, Department of Intellectual Resources, Japan Atomic Energy Research Institute, Tokai-mura, Naka-gun, Ibaraki-ken 〒319－1195, Japan.

©Japan Atomic Energy Research Institute, 1999

編集兼発行　日本原子力研究所

JAERI-Tech 99-055

Design of Remote Handling Equipment for the ITER NBI

Kiyoshi OKA and Eisuke TADA

Department of Fusion Engineering Research
(Tokai Site)
Naka Fusion Research Establishment
Japan Atomic Energy Research Institute
Tokai-mura, Naka-gun, Ibaraki-ken

(Received July 1, 1999)

The ITER machine has three Neutral Beam Injectors (NBIs) placed tangential to the plasma at a minimum radius of 6.25 m. During operation, neutrons produced by the D-T reactions will irradiate the NBI structure and it will become radioactive. Radiation levels will be such that all subsequent maintenance of the NBIs must be carried out remotely. The presence of tritium and possibly radioactive dust requires that precautions be taken during maintenance to prevent the escape of these contaminants beyond the prescribed boundaries.

The scope of this task is both the development of remote maintenance procedures and the design of the remote handling equipment to handle the NBIs.

This report describes the design of remote handling tools for the ion source and its filaments, transfer cask, maintenance time, manufacturing schedule and cost estimation.

Keywords : ITER, Neutron Beam Injector, Remote Handling Maintenance, Filament, HV Connector, Ion Source

---

This work is conducted as a ITER Technology R&D and this report corresponds to ITER Design Task Agreement (D311).

JAERI-Tech 99-055

ITER NBI 用遠隔保守機器の設計

日本原子力研究所那珂研究所核融合工学部
岡　　潔・多田　栄介

（1999 年 7 月 1 日受理）

核融合実験炉では、3 台の中性子入射装置（NBI）が、最小半径 6.25m でプラズマとの接線方向に設置される。NBI 装置は、D-T 運転により放射化されるため、遠隔操作による保守が必要となる。

このような観点から、これまでに、NBI 装置を遠隔にて取り扱うための手順及び各種のツールの設計を行ってきた。

本報告では、これまでに検討を行ってきた保守手順に従って、イオン源とフィラメントを取り扱うツール、トランスファーキャスク等の設計及び保守時間、製作スケジュール、コストについて、それぞれ評価を行った結果を報告するものである。

本報告は、ITER 工学 R&D の一環として実施したものであり、報告内容は設計タスク番号 D311 に対する結果を整理したものである。

那珂研究所（東海駐在）：〒319-1195　茨城県那珂郡東海村白方白根 2-4

Contents

1. Task Description ····· 1
1.1 Background and Scope ····· 1
1.2 Technical Outline ····· 1
1.3 Task Description ····· 1
1.4 Design Conditions ····· 2
1.5 Deliverables ····· 2
2. Filament Replacement ····· 2
2.1 Filament Replacement Procedure ····· 2
2.2 Tool Design for Filaments Replacement ····· 3
3. Ion Source Replacement ····· 3
3.1 Ion Source Replacement Procedure ····· 3
3.2 Conceptual Design of Handling Tools ····· 3
3.3 Overhead Bridge Crane ····· 12
4. Monitoring and Control System ····· 13
4.1 Monitoring System ····· 13
4.2 Control System ····· 14
5. Maintenance Time and Cost Estimation ····· 15
5.1 Estimation of the Maintenance Time ····· 15
5.2 Cost Estimation ····· 15
5.3 Fabrication Schedule ····· 17
6. Conclusion ····· 17
Acknowledgments ····· 18

目　次

1. 緒言 ····· 1
1.1 背景と目的 ····· 1
1.2 技術的概要 ····· 1
1.3 タスク内容 ····· 1
1.4 設計条件 ····· 2
1.5 成果物 ····· 2
2. フィラメント交換 ····· 2
2.1 フィラメント交換手順 ····· 2
2.2 フィラメント交換用ツールの設計 ····· 3
3. イオン源交換 ····· 3
3.1 イオン源交換手順 ····· 3
3.2 各種ツールの概要設計 ····· 3
3.3 オーバーヘッドブリッジクレーン ····· 12
4. 監視と制御システム ····· 13
4.1 監視システム ····· 13
4.2 制御システム ····· 14
5. 保守時間とコスト評価 ····· 15
5.1 保守時間の評価 ····· 15
5.2 コスト評価 ····· 15
5.3 製作スケジュール ····· 17
6. 結言 ····· 17
謝　辞 ····· 18

1. TASK DESCRIPTION

1.1 Background and scope

The ITER machine has three Neutral Beam Injectors (NBIs) placed tangential to the plasma at a minimum radius of 6.25 m. During operation, neutrons produced by the D-T reactions will irradiate the NBI structure and it will become radioactive. Radiation levels will be such that all subsequent maintenance of the NBIs must be carried out remotely. The presence of tritium and possibly radioactive dust requires that precautions be taken during maintenance to prevent the escape of these contaminants beyond the prescribed boundaries.

The scope of the 96-98 task is continue the development of remote maintenance procedures and remote handling equipment started under the 95 design task, N 23 TD 09 FJ-5, to work with the ITER-JCT to support the NB group in the design of key remote handling features of the NBIs.

This report describes the design of remote handling tools for the filaments and the ion source, transfer cask, maintenance time, manufacturing schedule and cost estimation.

1.2 Technical outline

To develop remote handling procedures and equipment for the NBI remote handling Class-1 maintenance tasks. To work with the ITER-JCT RH Group to establish essential NBI / remote handling interfaces.

1.3 Task description

(1) Develop the remote handling procedures proposed in the 95 Design Task Final Report

(2) Develop remote handling procedures, proposed by the JCT, for replacing the ion source filaments

(3) Develop detailed RH procedures for the development of tools for disconnecting the HV connection

(4) Provide preliminary designs of the remote handling equipment required for the following tasks:

- double door docking of maintenance and transfer casks
- deployment of remote handling tools for disconnection / connection of the ion source / accelerator
- deployment and remote handling tools to disconnect / connect the HV connection
- removal of the ion source / accelerator module
- removal of the ion source filament

(5) Provide designs of tools to disconnect and reconnect the HV line from the NBI source module.

(6) Estimate the time required carrying out the Class-1 maintenance procedures

(7) Develop a schedule for design through procurement and test

(8) Prepare Cost Estimates

1.4 Design conditions

The NBI modules are located in the NBI cell at the mid-plane level as shown in **Fig. 1.4-1**. The NBI system contains 3 neutral beam injectors, a diagnostic neutral beam, diagnostic equipment and bore tooling access facilities for the lower blanket and baffle modules. The NBI system is designed to inject 50 MW beams into the ITER plasma. Three neutral beam injectors are placed tangentially to the plasma at a radius of 6.5 m. Each unit is surrounded by a magnetic shield. The general layout of the NBI is shown in **Fig. 1.4-2**.

Table 1.4-1 summarizes the main components of the NBI system, together with their overall dimensions and dead weight. According to the remote handling classification of these NBI components, the ion source and accelerator are allocated into Class-1, which requires scheduled maintenance, as listed in **Table 1.4-2**. Therefore, this report focuses on the maintenance of these two components for NBI Class-1 maintenance tasks. **Table 1.4-3** represents the design conditions defined for remote maintenance operation of the ion source and accelerator.

1.5 Deliverables

The following deliverables are to be included.

(1) Conceptual RH procedures for NBI ion source/accelerator maintenance
(2) Conceptual RH procedures for NBI filaments maintenance
(3) Design concept of tool for filament replacement
(4) Design concept of ion source replacement tools
(5) Design concept of monitoring system for NBI remote maintenance tools
(6) Maintenance time estimation
(7) Manufacturing schedule
(8) Cost estimation

2. FILAMENT REPLACEMENT

2.1 Filament replacement procedure

According to the current machine layout, the main RH procedures to replace the filaments have been developed. From the scenario of beam operation, the pulses of 640 times and 1,000 seconds per one shot are expected in the current machine design and routine maintenance is expected due to the limited life time of the filaments. The filament replacement is categorized into Class-1 maintenance operation. They are installed into the ion source and the total number is 72. **Table 2.1-1** shows the design conditions of the filaments replacement and **Fig.2.1-1** shows the schematic view of the assembly of the filaments block. The six filaments are set into one block to facilitate the easy maintenance and replacement. They are fixed to the housing as shown in **Fig. 2.1-2**.

Table 2.1-2 summarizes the developed procedures for the filament replacement and **Table 2.1-3** shows the schematic view of the maintenance operations corresponding to the filament replacement procedures.

2.2 Tool design for filaments replacement

Six filaments are housed in one block and the blocks are attached to both right and left hand sides of the ion source. Thus, two kinds of handling tools are required to replace the filament blocks located at right and left hand side.

The functions required for the filament replacement is given in **Table 2.2-1**. The common type manipulator, which is recommended by JCT, has an accuracy of 2.54 mm. Therefore, the gaps between the tool and housing are considered to be over 0.5 mm from viewpoints of the accuracy and machining. **Figure 2.2-1** shows the design concept of the tool developed for filament replacement. In the case that the material is SS304, the weight of tool is about 9 kg. **Figure 2.2-2** shows the proposed design of filament arrangement for easy replacement. The requirements to be considered for the associated equipment are listed below;

1) Handling capacity of the multicontact lever
- torque less than 0.22 kg·m from the lever size and strength
- to obtain the enough contacting power

2) Manipulator
- handling capacity for the tool handling/operation
- the interface for the end-effector

3) Cask
- methods for holding the filament before/after filament replacement

3. ION SOURCE REPLACEMENT

3.1 Ion source replacement procedure

In the case of the ion source/accelerator, routine maintenance is expected because of the sputtering or erosion of the grids and degradation of the insulation voltage due to the build up of cesium on the accelerator girds. In this report, the RH procedures to replace the ion source/accelerator have been assessed.

The operation steps have been defined, corresponding to the main RH procedures required to replace the ion source. The breakdown of these RH procedures including the required tools and functions is summarized in **Table 3.1-1** to **Table 3.1-16**, and the related drawings to each operation step are shown in **Fig. 3.1-1** to **Fig. 3.1-18**.

3.2 Conceptual design of handling tools

3.2.1 Bolt connection/disconnection tool for the flange

In the case of the ion source replacement and maintenance, a bolt connection/disconnection tool (bolting tool) is needed for replacement of the ion source, which is connected to the NBI line with a flange bolted. For the bolting tool of the flange, three methods with different actuators, which are hydraulic pressure, air pressure and electric motor, are considered as candidates. **Table 3.2-1** shows

the comparison of three methods. From this, the method of electric power supply is proposed because of its simplicity without auxiliary system such as pump and compressor although large power consumption is required for large bolts.

3.2.2 Transfer cask

A transfer cask is required to transport heavy loads such as the ion source. In spite of that, the precise positioning and handling are needed so as to assure the contamination control during maintenance and transportation operations. The main requirements of the transfer cask are listed below.

1) Loading the ion source (30 ton)
2) Loading the NBI cell door (15 ton)
3) Loading the following tools for the ion source replacement and maintenance
   - Overhead crane
   - Manipulator
   - The transporter for the ion source
   - Turning and tilting mechanism for the double seal door
   - Double seal door for the maintenance
4) Preventing the spread of activated dust from the inside of cask

To facilitate these requirements, the following parameters have been specified for the transfer cask. **Fig.3.2-1** represents the external view of the designed transfer cask.

- Width : 4.5 m
- Height : 6.25 m
- Length : 7 m
- Cask walls : boundary of tritium (SS wall with thickness of 3 mm)
- Transportation : bogie type wheels
- Docking interface : double seal door for NB cell

(a) Positioning of the transfer cask

The transfer cask is traveling along the rail and connected to the NBI cell after changing the direction using a turntable. The positioning mechanism of the cask is needed to adjust the position and orientation of the cask for docking to the cell so as to accommodate misalignment and assure leak tightness. In addition, it is required to equip bolting mechanism because NBI cell door is a flange structure connected by bolts. Misalignment between the cask and the cell are to be considered for all directions (horizontal direction, vertical direction, rotation and tilt). The following functions are at least required to the cask from the viewpoint of reliable and tight docking.

1) Guide mechanism between NBI cell flange and the transfer cask door
2) Interface adjustment mechanism by the transfer cask
   - Cask level and orientation adjusting mechanism (such as air spring)
   - Driving mechanism to contact to the flange surface

- Locking and fixing mechanism after the positioning

Typical docking procedures between NBI cell and the transfer cask are shown in **Table 3.2-2**, assuming that the air springs are used as a compliance mechanism for cask level and orientation adjustment.

(b) Double seal door for the cask and the cell

The double-seal door, which is composed of a cask door and a cell door, is installed at the docking interface between the transfer cask and the NBI cell, as shown in **Fig. 3.2-2.** The double-seal door is designed to present the spread of activated dust during maintenance and transportation operations. During transportation of the cask released from the cell, the cask door is fixed to the cask to seal the cask opening. On the other hand, the cell door is fixed to the NB cell and seals the cell opening. After docking of the cask to the cell, two doors are locked each other and opened as one body for allowing maintenance operation though the openings of cell and cask. The main functions required to the double-seal door are listed below.

- Cask-to-door connection with double seals for leak checking.
- Cell-to-door connection with double seals.
- Door-to-door connection with at least single seal for preventing contamination.
- Doors stored inside the cask by using manipulator.
- Fixing mechanisms compatible with RH operation.
- Cell door connection/disconnection from the inside of cask.
- Easy cleaning of dusts.
- Replacement of seals by RH operation.
- Rescueability.

Based on these required functions, a preliminary design study on the double-seal door has been performed. The main results are described below.

1) Shape of the double-seal door

According to the current machine layout and space constraints, the size of the double-seal door is specified as follows.

• Cask door	: 3930 mm (W) × 4735 mm (H)
• Cell door	: 3780 mm (W) × 4585 mm (H)
• Thickness of two doors	: below 300 mm
• Weight of two doors	: below 10 tons

2) Door open/close operation

Since two doors are stored and opened/closed within a limited space inside of the cask, the door movement should be a parabolic trajectory as shown in **Fig. 3.2-3** in order to avoid any interference with the ion source which is transferred into the cask. In this operation, the followings are taken into account for doors open/close and ion source transfer operations.

- The ion source is to be rotated by turning and tilting mechanism when two doors are moved to the cell and cask flanged for connection.
- The ion source is to be moved radially into the cask with rotating at the same time.

• The double-seal door is partially stuck out into the cell flange due to its trajectory.

3) Seal methods of the door

The double-seal door acts as a boundary of the contamination control, so that reliable leak tightness has to be assured. For this, double-seals at each connection of cask-to-door, cell-to-door, and door-to-door are required so as to enable leak testing for assurance. Double seals are also required for cask-to-cell connection for the same reason as that of the double-seal door. **Figure 3.2-4** shows a schematic view of the double seals for connection of cask to cell. In this figure, two possible seal methods, O-ring and seal gasket, are presented. **Table 3.2-3** summarizes comparison and main characteristics of various seal materials. For these seal materials, a relative comparison has been performed, including seal tightness, repeatable usage, radiation tolerance, maintainability and cost, as listed in **Table 3.2-4**. As a result, rubber O-ring is proposed for the seal material from viewpoints of repeatable lifetime, easy maintenance/handling, low cost and high reliability.

4) Connection method of the double-seal door

Regarding the connection of the double-seal door, three methods, which are bolting type, cotter pin type and clamping type have been considered. The comparison of these methods is listed in **Table 3.2-5**. As a result, the following connection methods are proposed mainly from viewpoints of space constraints and RH operation from inside of the cask.

- Cask-to-door : Cotter pins from cask flange
- Door-to-door : Cotter pins from cask
- Cell-to-door : Bolting (the same as NBI cell door connection)

3.2.3 Welding/cutting tool for the lip seal

When the ion source is replaced, it is required that the lip of the flange is cut by the lip seal cutting tool. As for the cutting methods, a grinder type, a shear type and a melting type have been investigated. **Table 3.2-6** shows the relative comparison of these cutting methods. As a result, the shear type cutting method is proposed to the lip seal cutting tool from the following reasons.

- Possible to perform the interval cutting while loosening bolts of the flange.
- Easy to collect the chip after cutting.
- Easy to reweld after the cutting because of smooth surface by mechanical cutting.

In addition, the traveling methods for welding/cutting tools have been also considered, which are a manipulator handling type and a guide rail type which included a chain drive type, a ball screw (rack&pinion) type and a wire rope type. **Table 3.2-7** shows the relative comparison of these traveling methods. The rack&pinion type whose guide rail is pre-installed inside the NBI cell is better than the others because of the following reasons.

- Easy positioning
- Possible to equip the power supply inside the tool
- Possible to decrease the manipulator size because loads are supported by rail

Figures 3.2-5 and **3.2-6** show the design concept of the cutting/welding tool based on the

mentioned reasons, respectively.

3.2.4 Transporter for the ion source

A transporter is to transport the ion source from the cell to the cask for replacement. The design concept of the transporter, which is composed of a carrier, a supporting mechanism and a rail guide mechanism, is described in this section.

For the design of the transporter, the following basic procedures are assumed for the ion source removal.

(1) The cask is docked to the cell.
(2) The double seal door is opened.
(3) A rail for the ion source carrier is installed between the cask and the cell.
(4) The rail is connected and fixed.
(5) The ion source carrier is entered from the cask to the cell.
(6) The supporting mechanism on the carrier is jacked up for supporting the ion source.
(7) The flange of the ion source is removed by the manipulator with the bolting tool.
(8) The carrier supports the ion source dead weight.
(9) The carrier with the ion source is returned into the cask.
(10) The rail is restored into the cask.
(11) The ion source is fixed in the cask with the carrier
(12) The double seal door is closed.
(13) The cask is undocked and transported to the hot cell.

(1) Supporting mechanism

The following support methods are considered for supporting the ion source.

(a) A receiving plate and a screw jack
(b) A holding mechanism and a screw jack
(c) A receiving plate and an air spring

The key features and issues of these methods are described below.

(a) A receiving plate and a screw jack

The ion source is supported by the receiving plate, which is formed to a curved shape. The jack up/down is carried out by a screw jack. **Figure 3.2-7** shows the support mechanism of this method.

Advantages :

- Sufficient alignment capability for all directions because the receiving plate is formed to a curved shape corresponding to the outside shell of the ion source.

Issues :

- Need the fixation mechanism after the ion source received for stable transportation.
- Need the balancing mechanism.
- Need the synchronization operation of each screw jack.

(b) A holding mechanism and a screw jack

The ion source is supported by the holding pins, which are inserted to the holes of the ion source. **Figure 3.2-8** shows the support mechanism of this method for the ion source.

Advantages :

- Possible to support the ion source stability.

Issues :

- Need compliance for positioning of the holding pins.
- Need the precise control to insert the pins into the hole of the ion source.
- Need the synchronization operation of each screw jack.

(c) A receiving plate and an air spring

The ion source is supported by the receiving plate, which is formed to a curved shape plate. The jack up/down is carried out by air springs. **Figure 3.2-9** shows the support mechanism of this method.

Advantages :

- Sufficient alignment capability for all directions because the receiving plate is shaped to the outside shell of the ion source.
- Easy to adjust the center of the ion source because of the air spring flexibility.

Issues :

- Need the fixation mechanism after the ion source received for stable transportation.
- Need the balancing mechanism.

As results, the holding pin supports are proposed for the supporting mechanism because of stability for transportation although the detailed structure/mechanism is farther designed under the required conditions for NB maintenance.

(2) Rail guide mechanism

The following methods are considered as the candidates of rail connection between the cask and the cell.

- Case 1 : Manipulator handling type
- Case 2 : Pantograph type
- Case 3 : Rotation type
- Case 4 : Parallel link type
- Case 5 : Rail slide type

Table 3.2-8 summarizes the comparison of these rail connection methods. **Figures 3.2-10 ~ 3.2-14** show the rail connection structure corresponding to these methods. As the result, the rail slide type connection is better than the others from a viewpoint of the rail positioning. The structure of the drive mechanism to slide the rail is shown in **Fig. 3.2-15**.

The rail for the ion source transporter was sized under the loading conditions of the ion source with the dead weight of 20 tons. The maximum wheel pressure (Pmax) is calculated by the following equation.

$$Pmax = \alpha \cdot (W + G) / n$$

Here, G is the carrier weight, n is the number of wheels, and α is the biased load coefficient. An allowable wheel pressure (P) is calculated by the following equation.

$$P = D \cdot b \cdot K$$

Here, D is the diameter of a wheel, b is the effective width of the rail, and K is an allowable stress coefficient of a wheel (= 60~80 kg/cm^2 : special steel). **Figure 3.2-16** shows the relationship of the maximum wheel pressure to the allowable wheel pressure. When the surface of the rail is assumed to the flat, the Hertz stress can be calculated by the following equation.

$$P0 = 0.418 \cdot (qE / D / 2)^{1/2}$$

Here, P0 is the maximum pressure on the center of the contact surface, q is the line weight on the normalized length, D is the diameter of a wheel, and E is modules of direct elasticity (= 2.1 × 10^4 kg/cm^2). Examples of the calculation are shown in **Fig. 3.2-17**.

As the result, when the number of wheels is 8 and the width of the rail is 100 mm, the minimum wheel diameter (D) can be 100 mm. Assuming non-uniform loads distribution on wheels, the wheel diameter should be 150 mm for safety margin.

(3) Replacement procedures of ion source

From the above consideration, the removing and installing procedures of the ion source are considered in detail. The removing procedures are described as follows.

(1) A manipulator in the cask grabs a bolting tool.
(2) The manipulator with the bolting tool approaches to the flange of the ion source.
(3) The bolting tool is installed on the guide rail of the flange and fixed.
(4) The bolting tool unscrews the bolts located at a regular interval.
(5) The bolting tool removes the lower bolts at first.
(6) The manipulator grabs a lip seal cutting tool.
(7) The lip seal cutting tool is installed on the guide rail of the flange and fixed.
(8) The lip seal cutting tool cuts the lower lip seal of the flange.
(9) The carrier approaches to the ion source.
(10) The ion source is received by the carrier.
(11) The bolting tool removes all bolts.
(12) The bolting tool is returned to the cask.
(13) The lip seal cutting tool cuts the remaining lip seal of the flange.
(14) The lip seal cutting tool is returned to the cask.
(15) The ion source on the carrier is transported and stored in the cask.

In the same way, the installing procedures can be described as the follows.

(1) The ion source on the carrier is moved to the NB flange.
(2) The positioning between flanges is carried out by the carrier.
(3) A manipulator in the cask grabs the bolting tool.
(4) The manipulator with the bolting tool approaches to the flange of the ion source.

(5) The bolting tool is installed on the guide rail of the flange and fixed.
(6) The bolting tool fastens the bolts with a regular interval.
(7) The manipulator grabs a lip seal welding tool.
(8) The lip seal welding tool is installed on the guide rail of the flange and fixed.
(9) The lip seal welding tool welds the upper lip seal of the flange.
(10) The bolting tool fastens the bolts of the welded parts.
(11) The dead weight of the ion source is released from the carrier.
(12) The carrier is returned to the cask.
(13) The remained lip seal parts are welded by the lip seal welding tool.
(14) All bolts on the flange are fastened by the bolting tool.
(15) The lip seal welding tool is returned to the cask.
(16) The bolting tool is returned to the cask.

The main parameters of the ion source carrier are specified as listed below.

Degree of freedom	: 6
Allowable pay load	: 31 tons
Allowable positioning error	
- X axis	: ± 25 mm
- Y axis	: +30 mm, -0 mm
- Roll, Pitch, Yaw angles	: ±0.5, ±0.5, ±2 degrees
Allowable positioning error for the flange	: 0.1 mm

3.2.5 HV connection / disconnection tool

A high voltage (HV) connection line is composed of bus-bars, filament connectors and cooling pipes. When the ion source is replaced, the HV connection line must be disconnected by tools.

Figure 3.2-18 shows a concept of the bus-bar handling and bolting by using two manipulators and tools. The handling tool attached to the main manipulator grabs the center of the bus-bar and supports the weight. The bolting tool attached to the wrench handling manipulator fastens the bolts. Two type manipulators are controlled by the master-slave type control architecture.

The filament connector is formed to a square block in order to connect easily. The connector block is connected in the center of the filament cable. When the connector is connected/disconnected, one side of the connector is to be fixed in order to sustain the reaction force and the other side is free for push/pull. The design conditions of the connector block for the filament cable are listed below.

- Function
  - Possible to connect the electrical cable of the filaments.
- Movement ranges
  - From an electrical connection to a temporary place for the connector block.
- Handling method
  - Easy connection for remote handling.
  - Possible to handle with main and support manipulators cooperated.

• Reliability and safety
  - Need to verify the connector connection.
  - Possible to recover in case of trouble.
  - Possible to use in severe conditions.

Figures 3.2-19 and **3.2-20** show the handling tools designed for replacement of filament connectors. **Figure 3.2-21** shows the schematic view of the connector block.

The cooling pipes in the HV line are formed to double pipes in order to keep the electric potential. When the pipes are cut/welded, the pipes have to be adjusted and aligned in straight to the fixed pipes. In order to position and align the pipes, a pipe clamp mechanism has been designed. **Figure 3.2-22** shows the structural concept of the designed clamp mechanism together with a welding tool. The main functions of this clamp mechanism are listed below.

• Possible to fix the upper and lower pipes.
• Possible to set the welding/cutting tools on.
• Possible to hold the cut pipes.

3.2.6 Ion source flange handling tool

When the ion source is removed, its flange is to be handled by a flange handling tool with a bolting and a lip seal welding/cutting tool as mentioned above. **Figure 3.2-23** shows the flange handling tool designed. This tool can equip the bolting and lip seal welding/cutting tools.

3.2.7 Flange holding mechanism

When the outer flange, which is attached to the cell of the NBI, is removed, the double seal door with the outer flange of NBI cell is stored in the cask by using a flange holding mechanism before the maintenance operation. The holding mechanism has the functions of tilting and turning in order to move the double seal door with the flange.

When the holding mechanism is moved to the cask, it has to be tilted to avoid interference with the guide pin. Therefore, the holding mechanism is moved horizontally with tilting. The tilting mechanism also avoids from the interference with the ion source on the transporter. After tilting, the holding mechanism is turned to 180 degree. The double seal door with the flange is moved to the temporary place and fixed. For carrying the holding mechanism with approximately 15 tons, the tilting mechanism needs a strong support. Possible methods of the tilting are a cylinder type, a link type and a rotation type, as schematically shown in **Fig. 3.2-24**. Issues of each tilting method are as follows.

• Cylinder type
  - A cylinder tilts a double seal door.
  - Need a hydraulic type mechanism to support the door weight.
• Link type
  - A link tilts a double seal door.
  - Need an electric/hydraulic mechanism to support the door weight.

- Rotation type
  - Rotation mechanism rotates a double seal door.
  - Difficult to install the rotation mechanism.
  - Large torque applied on the rotation mechanism.

In addition, the holding mechanism needs a linear table to move the double seal door horizontally. Accordingly, it is required that the linear table and the tilting mechanism are installed on the turn table.

3.3 Overhead bridge crane

An overhead bridge crane is installed in the cask to handle the various equipment. The main objectives of this crane are;

- to carry and move the manipulator.
- to move the maintenance double seal door.
- to move the monitoring equipment in the cask.
- to hold the utilities for the end-effector.

For the design of the crane, the followings are to be taken into account.

- Possible to carry the maintenance double seal door
  - Consideration of the maximum transportation load.
  - Consideration of the stable grasping mechanism.
  - Rotation mechanism for the storing the door.
- Possible to move the manipulator.
- Possible to monitoring in the cask.
- Possible to handle remotely.
- Easy operation and rescue.
- Possible to clean easily.
- High reliability
  - To select the radiation hardness material.
  - Possible to change the parts with module structure.

To carry and move the manipulator, various bridge and trolley concept, such as suspension type, suspension double rail type and overhead type are investigated. **Table 3.3-1** shows the comparison of the manipulator carrier. As a result, the suspension double rail type carrier is better than the others from a view point of space availability due to the rail position. The cask wall is available to store the double seal door because the rail can be installed on the ceiling. The suspension type can be also adopted to the carrier.

The carrier on the crane must support the maintenance double seal door with a dead weight of 3.5 tons. Considering the supplementary parts for the carrier, the capacity of the carrier is to be approximately 15 tons. **Figure 3.3-1** shows the conceptual design of the crane carrier. It has the hang saddle with the double rails.

The telescopic arm is installed on the carrier. It handles the maintenance double seal door and

carries the manipulator. For operating the manipulator, the telescopic arm needs a stroke of 3.7 m. In addition, the rotation mechanism is needed to rotate ±180 degrees from a view point of the manipulator operation range and the double seal door operation. **Figure 3.3-2** shows a conceptual design of the telescopic arm. The specifications of the crane are shown as the follows.

- Traveling speed : 0 ~ 10 m/min (variable)
- Traversing speed : 0 ~ 10 m/min (variable)
- Stroke speed : 1.0, 5.0 m/min
- Rotation speed : 0 ~ 3 rpm
- Span : 4.25 m
- Traveling range : 6.75 m
- Telescopic stroke : 3.65 m
- Capacity : 15 tons
- Manipulator arm length : 1 m

4. MONITORING AND CONTROL SYSTEM

4.1 Monitoring system

When the NBI maintenance is carried out, a monitoring system helps operators for the remote handling operations. The monitoring system covers the observation of the transfer cask movement and the remote handling operation. A normal type camera, that is not radiation hardness type, is adopted to the monitoring system because of low gamma radiation. The conditions of the monitoring system are shown as follows.

- Conditions
  - Same as the NBI maintenance conditions.
- Lighting
  - No illumination in the NBI cell.
- Observation object
  - Traveling situation of the transfer cask for the NBI maintenance.
  - Situation in the transfer cask while traveling.
  - Situation in the transfer cask during the NBI maintenance.
  - Manipulator operation during the NBI maintenance.

Considering the above conditions, the observation cameras are required at least to motion traveling of the cask operation in the transfer cask, the crane operation, the manipulator operation and the transfer cask. The specifications of cameras are described as follows.

- Traveling observation camera

  Two camera units are installed on the cask, corresponding to the traveling direction with backward and forward.
- Transfer cask inside observation camera

  For monitoring the double seal door and the ion source on the carrier, four camera units are

installed on the corners of the cask inside.

- Crane observation camera

  For monitoring the crane and the overall manipulator on the telescopic arm, two camera units are installed on the right and left of the trolley.

- Manipulator observation camera

  For monitoring the manipulator, two camera units are installed on the right and left of the arm.

- Transfer cask outside observation camera

  For monitoring the outside of the transfer cask, three camera units are installed on the NBI maintenance floor, the cask lifter and the hot cell, respectively.

- Control and operation methods

  All camera units are controlled from the central operation room. When the cask is connected to the NBI cell, the monitoring system is controlled through the cable connection. While the cask is traveling, the monitoring system is controlled by the trolley-bus-duct connection.

- Specifications of the camera unit

- Signal method	: NTSC
- Imaging sensor	: Charge Coupled Device (CCD)
- Minimum illumination	: 2 Lux
- Lens mount	: C mount
- Lens	: zooming mechanism
- Illumination	: halogen lamp
- Movement	: panning, tilting, zooming, focusing

Figure 4.1-1 shows the conceptual design of the monitoring system and **Fig. 4.1-2** shows the construction of the monitoring system.

4.2 Control system

The transfer cask is moved from the hot cell to the NBI cell. During the traveling, the cask is controlled by remotely from the central control/operation room. Therefore, the communication between the cask and the operation room is needed for control the cask traveling. **Table 4.2-1** shows the comparison of the contact and non-contact type communication methods. As a result, the closed combination wireless method seems better for cask control.

In the same way, the power supply is needed for the cask and RH equipment for operation. **Table 4.2-2** shows the comparison of the power supply methods, trolley and battery. As a result, the trolley type on ceiling is better than the others from a view point of the space efficiency. If possible, it should be considered to adopt the contactless energy transfer system. **Figure 4.2-1** shows the overall NBI maintenance system.

5. MAINTENANCE TIME AND COST ESTIMATION

5.1 Estimation of the maintenance time

The filaments and the ion source replacement time were estimated under the assumed maintenance scenario. The assumed conditions for the replacement are shown in **Table 5.1-1**, which includes speed of each equipment, a destination of each equipment and each traveling distance. The cask transfer route assumed for the NBI maintenance is shown in **Fig. 5.1-1**.

The estimated maintenance time for the filament replacement and the ion source replacement is shown in **Figs. 5.1-2** and **5.1-3**, respectively. In the case of the filament replacement, the total replacement time is estimated to be about 16 hours and the ion source replacement time is about 30 hours. This maintenance time estimates only processing time under the assumptions.

5.2 Cost estimation

The fabrication cost of NBI maintenance equipment based on the design study mentioned above is preliminary estimated. The conditions of the estimation are listed below.

(a) Cost estimation items

- Number : one set
- Estimation items : design of the equipment, fabrication, installation
  fabrication drawing
  processing, fabrication, assemble
  test and inspection in the factory
  assemble in the spot
  function test in the spot

(b) Equipment for estimation

- NB transfer cask
- Overhead crane
- Ion source transporter
- Turning and tilting mechanism for ion source
- Filament handling tool
- Bus-bar handling tool
- Filament connector handling tool
- Welding/cutting tool from outside
- Flange handling tool
- Cask docking wrench
- Lip seal welding/cutting tool
- Monitoring system for all equipment
- Controller for all equipment

The quantity of each equipment is described below.

(1) Transfer cask system

- Transfer cask : 1 set
- Bogie for the cask : 2 set
- Double seal door for the cask : 1 set
- Trolley for the signal and power supply : 1 set

(2) Loading equipment

(a) Ion source transporter

- Transporter for the ion source movement : 1 set
- Rail unit for the ion source traveling : 1 set

(b) Overhead crane

- Telescopic arm : 1 set
- Master slave type manipulator : 1 set
- Double seal door support mechanism : 1 set
- Traveling rail : 1 set

(c) Turning and tilting mechanism

- Turn table : 1 set
- Tilting mechanism : 1 set
- Rail unit for the tilting mechanism : 1 set
- Storage stand for the double seal door : 1 set

(d) Double seal door for the maintenance

- Maintenance double seal door : 1 set
- Storage stand for the maintenance double seal door : 1 set
- Storage stand for the ion source flange : 1 set
- Flange bolting tool : 1 set

(e) Filament and HV handling Tools

- Filament handling tool : 2 sets for right and left
- Filament storage rack : 1 set
- Flange bolting tool : 1 set
- Bus-bar handling tool : 1 set
- Filament connector handling tool : 1 set
- Welding/cutting tool for the cooling pipe : 1 set
- Positioning tool for the cooling pipe : 1 set
- Lip seal welding/cutting tool : 1 set
- Flange bolt connection tool : 1 set
- Storage stand for the changing parts : 1 set
- Storage stand for the tools : 1 set

(3) Monitoring system

- Cask traveling observation camera unit : 2 set
- Cask inside observation camera unit : 4 set
- Overhead crane observation camera unit : 2 set

- Manipulator observation camera unit : 2 set
- Control system for the monitoring : 1 set
- Illumination : 1 set

(4) Control and operation unit

- Central operation and control unit : 1 set
- Relay box : 1 set
- Trolley bus duct for the power supply and signal : 1 set

(5) Test stand for a factory and spot

- NBI cell mock up equipment : 1 set
- Ion source mock up equipment : 1 set
- Traveling rail mock up equipment : 1 set
- Traveling area mock up equipment : 1 set
- Lifter mock up equipment : 1 set
- Measurement equipment for tests : 1 set

(6) Installation jigs

- Rail setting tools : 1 set

Table 5.2-1 shows the result of cost estimation for the NBI maintenance equipment based on the mentioned above.

5.3 Fabrication schedule

Figure 5.3-1 shows the fabrication schedule for the NBI maintenance equipment, which is preliminary estimated on the basis of this design study.

6. CONCLUSION

The NBI maintenance has been designed and assessed under the ITER EDA conditions. It covers the following equipment for replacement of filaments and ion source, which are the RH Class-1 components.

- Transfer cask
- Manipulator system (including manipulator and telescopic arm on the overhead crane)
- End-effector for each task
- Turning and tilting mechanism for the ion source
- Transporter for the ion source
- Maintenance double seal door
- NBI dome double seal door
- Double seal door handling mechanism
- Rail deploying mechanism for the transporter
- Monitoring system
- Control and operation system

In addition, preliminary estimation on cost, maintenance time and the fabrication schedule are

presented in accordance with the results of this design study and assumptions.

Based on the design concepts developed in this task, more detailed design study is required to develop the remote handling procedures and equipment/tools.

ACKNOWLEDGMENTS

The authors would like to express their sincere appreciation to Drs. M. Ohta, S. Matsuda and H. Kishimoto for their continuous encouragement on this work. The contributions by the staffs of department of ITER project and Hitachi Corp. are gratefully acknowledged.

Table 1.4-1 Main NBI components

Component		Overall dimensions (m)	Dead weight (ton)
Ion source & accelerator	IS & Acc	3.2 dia x 2.8 L	25.9
	I/S Vessel	5.0 dia x 4.4 L	50.2
	Total	**5.0 dia x 4.4 L**	**76.1**
Beam line	Neutralizer	1.2 W x 2.2 H x 3 L	8.4
	Residual ion dump	1.2 W x 2.4 H x 1.8 L	3.4
	Calorimeter	0.03 W x 1.4 H x 0.96 L	10.9
	Cryopump	3.475 dia x 6.95 L	3.5
	Beam limiter	TBD	0.75
	Vacuum vessel	3.675 dia x 6.95 L	18.5
	Total	**3.975 dia x 6.95 L**	**42**
Vacuum duct	Module bellows	1.7 dia x 0.76 L	0.5
	Duct liner	0.64 W x 1.3 H x 5.4 L	8
	Drift duct	3.0 dia x 1.52 L	5.6
	Port side bellows	2.0 dia x 1.75 L	1.4
Port duct	Port liner	0.64 W x 1.3 H x 1.5 L	8.2

Table 1.4-2 Remote handling classification of NBI components

Class-1		Class-2		Class-3	
Component	Frequency	Component	Frequency	Component	Frequency
Ion source & Accelerator	1 per year per NBI			Neutralizer	Accident
				Ion dump	Accident
Filaments	2 per year per NBI			Calorimeter	Accident
				Cryopump	Accident
				Beam limiter	Accident
				Beam duct	Accident

Table 1.4-3 Environmental conditions for Class-1 maintenance

Items	Design conditions
Pressure	0.1 MPa
Vent/Purge gas	air or nitrogen
Temperature	~ ambient
Radiation (preliminary estimate)	0.1 ~ 1 Sv/h around the ion source 10^{-2} Sv/h outside the ion source vacuum boundary 10^{-3} Sv/h outside the beam line 10^{-4} ~ 10^{-5} Sv/h outside the magnetic shield
magnetic field	zero

Table 2.1-1 Design conditions of the filament replacement

No.	Category	Conditions
1	Functions	1) A manipulator handles the filaments with useful tools attached on the end-effector. 2) A manipulator commonly handles other components by changing the tools.
2	Structure, dimension	
	(1) Filaments	1) Six filaments with electrodes at the side of them are set to one block. 2) One filament block has a mechanism to fix itself to the housing mechanism on the ion source. 3) The electrodes have expand-plugs to connect and disconnect them by lever operation.
	(2) Housing	1) The housing installs the block of filaments as shown in **Fig. 2.1-2**. 2) The housing has a multi contact mechanism of electrodes. 3) The housing has filament locking devices and alignment tool mounting holes.
	(3) Surrounding	1) The surrounding of the ion source is shown in **Figs. 2.1-3 ~ 2.1-6**.
3	Others	1) The total weight of six filaments and tool is less than 50 kgf.

Table 2.1-2 Procedure of filaments replacement

NO.	PROCEDURE	PROBLEMS	COUNTERMEASURES
1	Preparatory Work		
	(1) Align cask with hatch.		
	(2) Remove hatch.	———	
	(3) Remove source dome cover.		
	(4) Prepare manipulator		
2	Removal of Filaments		
	(1) Grasp tool by manipulator.	· Mechanism to prevent move or drop during transportation	· A stopper is provided with the linear guide.
	(2) Install tool onto housing.	· Interface structures of tool and housing	· The upper lower guide pins and the holes of housing are tapered.
	(3) Rotate tool.	· Position of grasping tool by manipulator during rotation	· The grasping position is the upper part of tool which does not interfere with buss bars, etc..
	(4) Insert tool into housing.	· Position of grasping tool by manipulator during insertion	· The grasping position is that not to yield rotational force to tool.
	(5) disconnect electrodes.	· Position of grasping tool by manipulator during withdrawal	· Same as above.
	(6) Fix filament to tool.	· Operation of rotating lever	· Rotate the center axis of lever. (The end effector is required to replace.)
	(7) Withdraw tool.	· Structure to determine angular position of tool when rotating	· A stopper is provided with the tool.
	(8) Rotate tool.	· Force needed for each operation	· It will be studied in the basic design.
	(9) Remove tool to cask.	· Operation and Control of manipulator	· Same as above.
3	Installation of Filaments		
	(1) Grasp tool by manipulator.	· Mechanism to prevent move or drop during transportation	· Same as above (2(1)).
	(2) Fix filament to tool.	· Structure to fix filaments	· Locking structure using spring is provided.
	(3) Install tool onto housing.	· Interface structures of tool and housing	· Same as above (2(2)).
	(4) Rotate tool.	· Position of grasping tool by manipulator during rotation	· Same as above (2(3)).
	(5) Insert tool into housing.	· Position of grasping tool by manipulator during insertion	· Same as above (2(4)).
	(6) Fix filament to housing	· Position of grasping tool by manipulator during withdrawal	· Same as above (2(5)).
	(7) Connect electrodes.	· Operation of rotating lever	· Same as above (2(6)).
	(8) Withdraw tool.	· Structure to determine angular position of tool when rotating	· Same as above (2(7)).
	(9) Rotate tool.	· Force needed for each operation	· Same as above (2(8)).
	(10) Remove tool.	· Operation and Control of manipulator	· Same as above (2(9)).
4	Restoring Work		
	(1) Store replaced filaments.		
	(2) Store manipulator.	———	
	(3) Install source dome cover.		

Table 2.1-3 Schematic view of filaments replacement (1)

NO.	PROCEDURE	SKETCHES
1	Preparatory Work (1) Align cask with hatch. (2) Remove hatch. (3) Remove source dome cover. (4) Prepare manipulator	
2	Removal of Filaments (1) Grasp tool by manipulator.	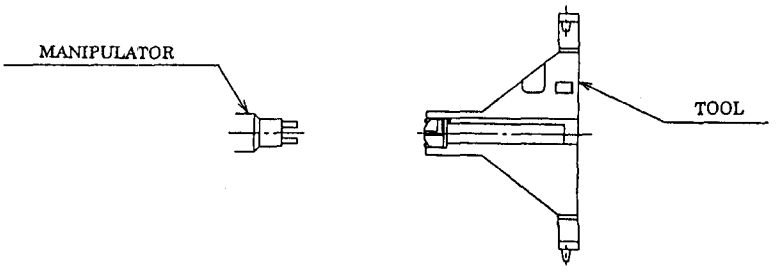
	(2) Install tool onto housing.	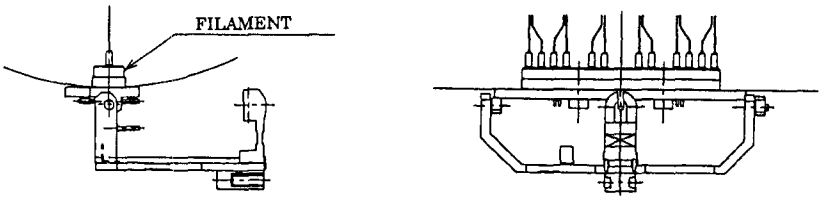
	(3) Rotate tool.	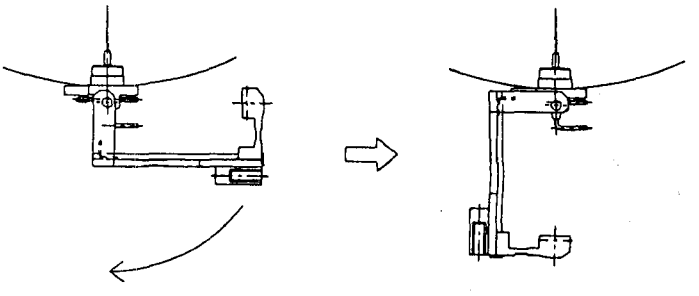
	(4) Insert tool into housing.	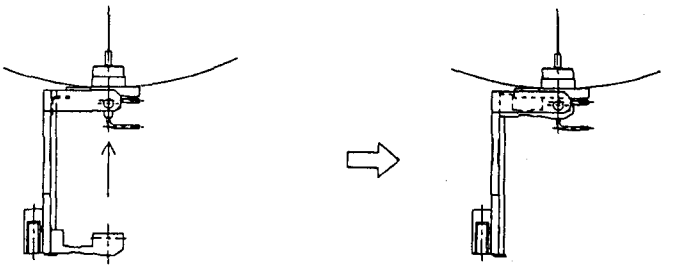
	(5) disconnect electrodes.	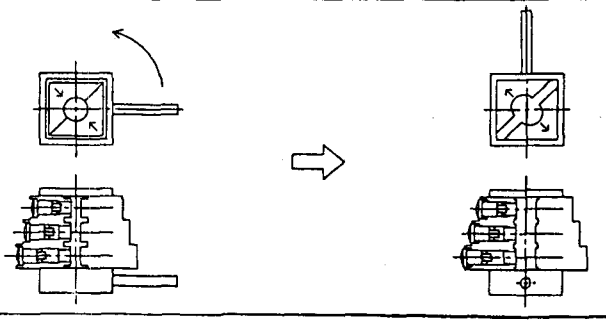

Table 2.1-3 Schematic view of filaments replacement (2)

	(6) Fix filament to tool.	
	(7) Withdraw tool.	
	(8) Rotate tool.	
	(9) Remove tool to cask.	
3	Installation of Filaments (1) Grasp tool by manipulator.	MANIPULATOR TOOL
	(2) Fix filament to tool.	

Table 2.1-3 Schematic view of filaments replacement (3)

(3) Install tool onto housing.	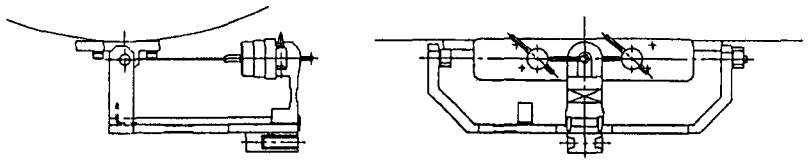
(4) Rotate tool.	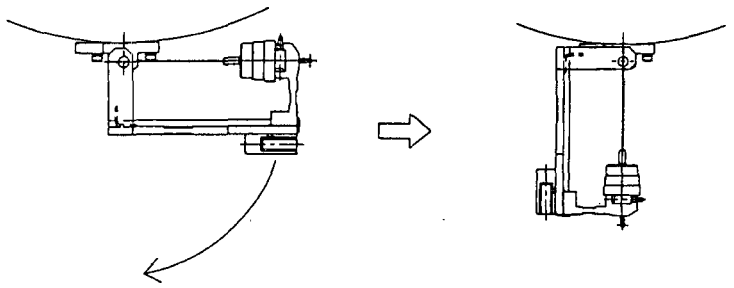
(5) Insert tool into housing.	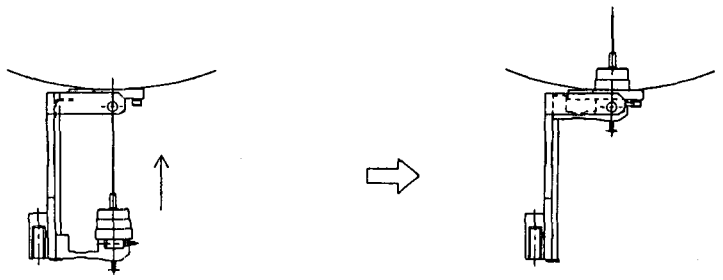
(6) Fix filament to housing	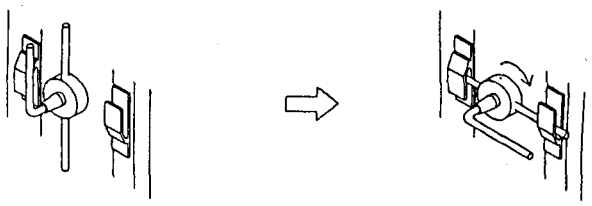
(7) Connect electrodes.	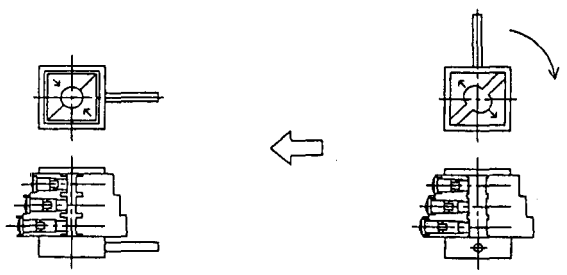
(8) Withdraw tool.	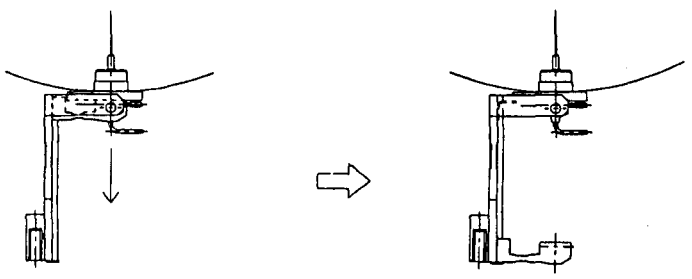

Table 2.1-3 Schematic view of filaments replacement (4)

	(9) Rotate tool.	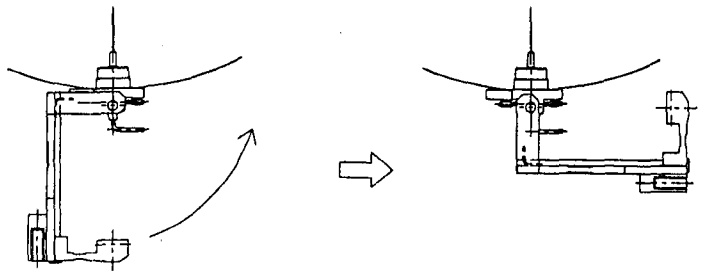
	(10) Remove tool.	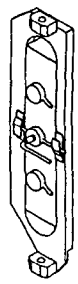
4	Restoring Work (1) Store replaced filaments. (2) Store manipulator. (3) Install source dome cover.	

Table 2.2-1 Functions of the filament replacement tool

NO.	FUNCTION	SKETCHES
1	Prevention to move and drop during transportation	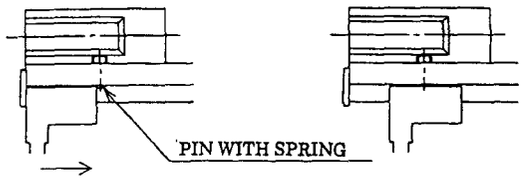
2	Interface structures of tool and housing	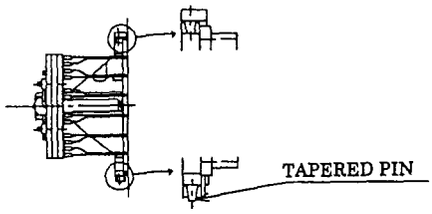
3	Grasping position during trasportation	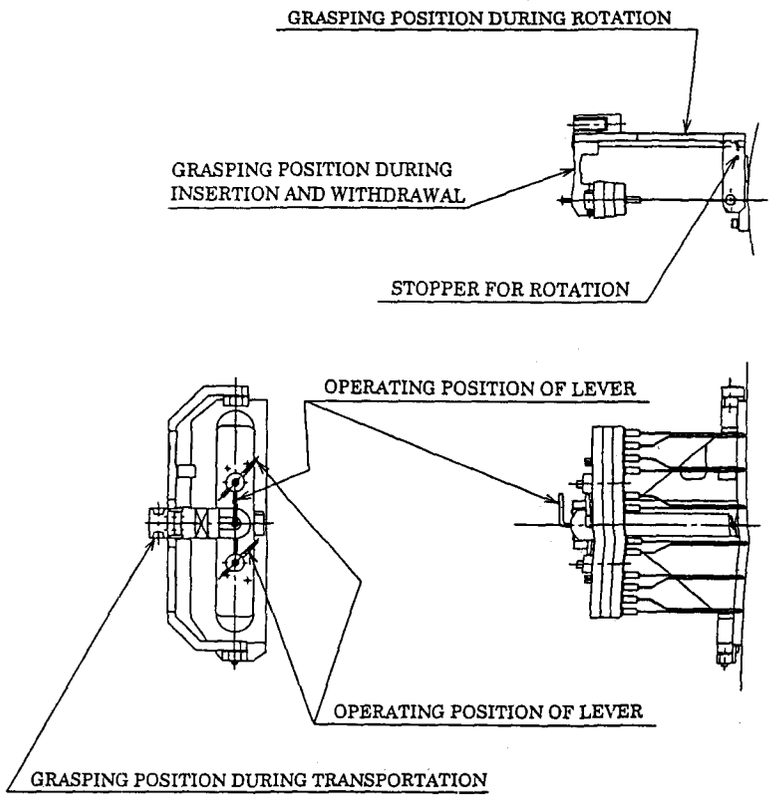
4	Grasping position during rotation	
5	Grasping position during insertion	
6	Grasping position during withdrawal	
7	Operating position of lever	
8	Determination of angular position during rotation	
9	Fixing filament	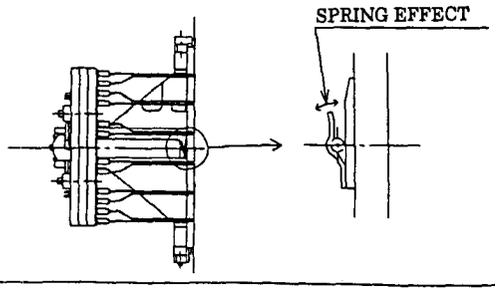

Table 3.1-1 Maintenance scenario of NBI ion source

No.	Main procedure	Sub procedure	Assistant procedure(pre/post work)	・Circumstances ・Space & interference	・Requirements for equipment/structure ・Tools,Remarks/Issues,etc.
1	1 Install the cask to NBI maintenance area	1.1 Lower the cask to NBI floor level	1.1.1 Install the tools to the cask 1.1.2 Transfer the cask to the main building 1.1.3 Lower the cask to NBI floor level	<1R/h atmosphere	-horizontal movement mechanism(crane,rail & truck) -150tons lifter/crane
		1.2 Move the cask along the troidal rail in the gallery	1.2.1 Locate the cask to a truck on the rail of corridor 1.2.2 Move the cask on the corridor 1.2.3 Locate the cask in front of the NBI cell		-Position adjustment of the cask to the truck
		1.3 Locate the cask on a turn table in front of the NBI cell	1.3.1 Fix the truck on the turn table		-locking mechanism to fix the cask to the turn table

Table 3.1-2 Maintenance scenario of NBI ion source

No.	Main procedure	Sub procedure	Assistant procedure(pre/post work)	・Circumstances ・Space & interference	・Requirements for equipment/structure ・Tools,Remarks/Issues,etc.
2	1 Docking of the cask to the NBI cell	1.1 Dock the cask to the cell	1.1.1 Slide the turn table 1.1.2 Positioning by the guide mechanism 1.1.3 Fix the cask to the docking flange		-docking and positioning mechanism -seal mechanism between the docking flange and the cask -applicability of O-ring
		1.2 Connect the cask door to the NBI Pressure vessel dome	1.2.1 Connect the cask door to the dome flange 1.2.2 Unbolte the dome flange 1.2.3 Unlock the dome double seal door		-seal mechanism of the cask door -Unbolting mechanism -to form a double seal door -locking mechanism of dome double seal door
	2 Open the double seal door	2.1 Open the dome double seal door	2.1.1 Move the dome double seal door to back of the cask by door tilting mechanism 2.1.2 Fix the double seal doors	10^2R/h	-applicability of O-ring -excange of the O-ring -air condition in the NBI cell -recover the dust around NBI vessel dome -door tilting mechanism -fixing mechanism

Table 3.1-3 Maintenance scenario of NBI ion source

No.	Main procedure	Sub procedure	Assistant procedure(pre/post work)	・Circumstances ・Space & interference	・Requirements for equipment/structure ・Tools,Remarks/Issues,etc.
3	1 Disconnecting HV line	1.1 Remove bus bar	1.1.1 Grapple a bus bar by support arm 1.1.2 Disconnect lower bus bar connecting bolts by manipulator with impact wrench 1.1.3 Disconnect upper bus bar connecting bolts by manipulator with impact wrench 1.1.4 Release and remove bus bars to the cask		-support arm with grappling mechanism -manipulator mechanism -position adjustment of impact wrench to the bus bar bolts -storage of bus bars
		1.2 Remove filament feed connectors	1.2.1 Grapple a filament feed by support arm 1.2.2 Disconnect filament feed conectors by manipulator 1.2.3 Temporary storage of the connectors on the ion source		-filament feed grappling mechanism -Disconnecting/Connecting mechanism of the connector -position adjustment of arm -storage of filament feed connectors

Table 3.1-4 Maintenance scenario of NBI ion source

No.	Main procedure	Sub procedure	Assistant procedure(pre/post work)	・Circumstances ・Space & interference	・Requirements for equipment/structure ・Tools,Remarks/Issues,etc.
3	1 Disconnecting HV line	1.3 Remove corona shield of pipe	1.3.1 Grapple a corona shield 1.3.2 Disconnect corona shield 1.3.3 Release and remove corona shield to the cask		-corona shield fixing mechanism -position adjustment of manipulator -storage of corona shield
		1.4 Cutting water cooled feed pipes	1.4.1 Positioning clamp mechanism on pipe 1.4.2 Positioning pipe cutter on the clamp 1.4.3 Cutting the pipe 1.4.4 Remove the pipe cutter to the cask 1.4.5 Remove the clamp to the cask		-clamp/unclamp mechanism -pipe cutter mechanism -recovery of chips -edge preparation -

Table 3.1-5 Maintenance scenario of NBI ion source

No.	Main procedure	Sub procedure	Assistant procedure(pre/post work)	・Circumstances ・Space & interference	・Requirements for equipment/structure ・Tools,Remarks/Issues,etc.
4	1 Install the radial rail	1.1 Install the radial rail to bridge between the cell and cask	3.1.1 Deploy the rail 3.1.2 Fix the rail		-deployment and docking mechanism of the radial rail
	2 Deployment the RH equipment/tools	2.1 Install the manipulator	2.1.1 Deploy the manipulator 2.1.2 Locate the manipulator		-manipulator deployment mechanism -positioning and fixing mechanism for the manipulator
		2.2 Install unbolting equipment/tools	2.2.1 Install the unbolting equipment by manipulator on flange of ion source		-installation space for the manipulator and work area -monitoring for the manipulator movement, measurement and control
		2.3 unbolt	2.3.1 Unbolt of flange bolts, except holding bolts		-unbolting mechanism -move mechanism
		2.4 Remove the equipment	2.3.1 Remove the equipment to the cask		

Table 3.1-6 Maintenance scenario of NBI ion source

No.	Main procedure	Sub procedure	Assistant procedure(pre/post work)	・Circumstances ・Space & interference	・Requirements for equipment/structure ・Tools,Remarks/Issues,etc.
5	1 Install the ion source transporter	1.1 Install the ion source transporter	1.1.1 Move the transporter into ion source pressure vessell 1.1.2 Positioning the transporter to lifting position 1.1.3 Raising ion source supports to load ion source		-transporter mechanism -positioning the transporter -sensing the load of ion source
	2 Cutting rip seal	2.1 Install the manipulator	2.1.1 Deploy the manipulator 2.1.2 Locate the manipulator		-manipulator deployment mechanism -positioning and fixing mechanism for the manipulator
		2.2 Install rip seal cutting tools	2.2.1 Install the rip seal cutting tool by manipulator on flange of ion source		-installation space for the manipulator and work area -monitoring for the manipulator movement, measurement and control.
		2.3 Cutting the rip seal	2.31 Cutting the rip seal		
		2.4 Store the tool	2.4.1 Remove the manipulator 2.4.1 Store the tools in the cask		

Table 3.1-7 Maintenance scenario of NBI ion source

No.	Main procedure	Sub procedure	Assistant procedure(pre/post work)	・Circumstances ・Space & interference	・Requirements for equipment/structure ・Tools,Remarks/Issues,etc.
	3 Unbolt the holding bolts	3.1 Install unbolting tool	3.1.1 Install the unbolting tool by manipulator on flange of ion source		-monitoring for the manipulator movement, measurement and control
		3.2 Unbolt the holding bolts	3.2.1 Unbolt the holding bolt 3.2.2 Move the unbolting tool to next bolt		
		3.3 Recover trash	3.3.1 Put away trash in the cask		
		3.4 Store the tool	3.4.1 Remove the manipulator 3.4.2 Store the tools in the cask 3.4.3 Remove the manipulator to upper side of the cask		

Table 3.1-8 Maintenance scenario of NBI ion source

No.	Main procedure	Sub procedure	Assistant procedure(pre/post work)	·Circumstances ·Space & interference	·Requirements for equipment/structure ·Tools,Remarks/Issues,etc.
6	1 Transfer the ion source	1.1 Transfer the ion source	1.1.1 Transfer the ion source by the ion source transporter		-driving and fixing mechanism of the ion source
		1.2 Move into the cask	1.2.1 Move the ion source into the cask 1.2.2 Fix the ion source in the cask		
	2 Remove the radial rail	2.1 Remove the radial rail between the cell and cask	2.1.1 Unlock the rail fixing mechanism 2.1.2 Re-store the rail in the cask		
	3 Close the double seal door	3.1 Move the double seal door to the cask interface	3.1.1 Unlock the double seal door 3.1.2 Grapple the double seal door by in-cask crane 3.1.3 Turn the double seal door 3.1.4 Move to the interface position		-deployment mechanism of double seal door -balance of double seal door -positioning of double seal door
		3.2 Lock the NBI cell door	3.2.1 Lock the NBI cell door		-drive method of lock
	4 Release the double seal door and transfer cask	4.1 Separate the transfer cask door from NBI cell door	4.1.1 Release the cask door from NBI cell door 4.1.2 Fix the cask door to the cask 4.1.3 Close the cask door seal		
		4.2 Release the cask from the cell	4.2.1 Move the cask holizontally and detach the cask from the cell		

Table 3.1-9 Maintenance scenario of NBI ion source

No.	Main procedure	Sub procedure	Assistant procedure(pre/post work)	·Circumstances ·Space & interference	·Requirements for equipment/structure ·Tools,Remarks/Issues,etc.
	5 Transport the transfer cask containing the ion source	5.1 Rotate the cask for transportation	5.1.1 Rotate the turn table 5.1.2 Unlock the cask from the turn table		
		5.2 Move on the corridor	5.2.1 Move the cask along the toroidal rail 5.2.2 Locate the cask to the lifting position		
		5.3 Carry out the cask outside NBI floor	5.3.1 Lift the cask 5.3.2 Transport the cask to the hotcell		

Table 3.1-10 Maintenance scenario of NBI ion source

No.	Main procedure	Sub procedure	Assistant procedure(pre/post work)	·Circumstances ·Space & interference	·Requirements for equipment/structure ·Tools,Remarks/Issues,etc.
7	1 Install the cask (include maintenanced ion source) to NBI maintenance area	1.1 Lower the cask to NBI floor level	1.1.1 Install the tools to the cask 1.1.2 Transfer the cask to the main building 1.1.3 Lower the cask to NBI floor level	<1R/h atmosphere	(similar No.1-1.1)
		1.2 Move the cask along the troidal rail in the gallery	1.2.1 Locate the cask to a truck on the rail of corridor 1.2.2 Move the cask on the corridor 1.2.3 Locate the cask in front of the NBI cell		(similar No.1-1.2)
		1.3 Locate the cask on a turn table in front of the NBI cell	1.3.1 Fix the truck on the turn table		(similar No.1-1.3)

Table 3.1-11 Maintenance scenario of NBI ion source

No.	Main procedure	Sub procedure	Assistant procedure(pre/post work)	・Circumstances ・Space & interference	・Requirements for equipment/structure ・Tools,Remarks/Issues,etc.
8	1 Docking of the cask to the NBI cell	1.1 Dock the cask to the cell	1.1.1 Slide the turn table 1.1.2 Positioning by the guide mechanism 1.1.3 Fix the cask to the docking flange		(similar No.2-1.1)
		1.2 Connect the cask door to the NBI Pressure vessel door	1.2.1 Connect the cask door to the vessel door 1.2.2 Unlock the vessel door from vessel flange 1.2.3 Unlock the double seal door from cask		-Unlocking mechanism
	2 Open the double seal door	2.1 Open the double seal door	2.1.1 Move the double seal door to side of the cask by manipulator 2.1.2 Fix the double seal doors	10^2R/h	

Table 3.1-12 Maintenance scenario of NBI ion source

No.	Main procedure	Sub procedure	Assistant procedure(pre/post work)	·Circumstances ·Space & interference	·Requirements for equipment/structure ·Tools,Remarks/Issues,etc.
9	1 Install the radial rail	1.1 Install the radial rail to bridge between the cell and cask	1.1.1 Deploy the rail 1.1.2 Fix the rail		
	2 Transfer the ion source	2.1 Transfer the ion source 2.2 Move into the pressure vessel	2.1.1 Transfer the ion source by the ion source transporter 2.2.1 Unlock the ion source in the cask 2.2.2 Move the ion source into the pressure vesel		(reverse order of No.6-1)
	3 Bolt the holding bolts	3.1 Install bolting tool	3.1.1 Install the bolting tool by manipulator on flange of ion source		
		3.2 Bolt the holding bolts	3.2.1 Bolt the holding bolt 3.2.2 Move the bolting tool to next bolt		
		3.3 Store the tool	3.4.1 Remove the manipulator 3.4.2 Store the tools in the cask 3.4.3 Remove the manipulator to upper side of the cask		

Table 3.1-13 Maintenance scenario of NBI ion source

No.	Main procedure	Sub procedure	Assistant procedure(pre/post work)	・Circumstances ・Space & interference	・Requirements for equipment/structure ・Tools,Remarks/Issues,etc.
10	1 Remove the ion source transporter	1.1 Remove the ion source transporter	1.1.1 Lower ion source supports to unload ion source 1.1.2 Remove the transporter into the cask from ion source pressure vessell 1.1.3 Positioning the transporter to fixing position		(reverse order of No.5-1)
	2 Welding rip seal	2.1 Install the manipulator	2.1.1 Deploy the manipulator 2.1.2 Locate the manipulator		
		2.2 Install rip seal welding tools	2.2.1 Install the rip seal welding tool by manipulator on flange of ion source		
		2.3 Welding the rip seal	2.31 Welding the rip seal		-welding tool
		2.4 Store the tool	2.4.1 Remove the manipulator 2.4.1 Store the tools in the cask		

Table 3.1-14 Maintenance scenario of NBI ion source

No.	Main procedure	Sub procedure	Assistant procedure(pre/post work)	·Circumstances ·Space & interference	·Requirements for equipment/structure ·Tools,Remarks/Issues,etc.
11	1 Deployment the RH equipment/tools	1.1 Install bolting equipment/tools	1.1.1 Install the bolting equipment by manipulator on flange of ion source		(reverse order of No.4-2)
		1.2 Bolting	1.2.1 Bolt of flange bolts, except holding bolts		
		1.3 Remove the equipment	1.3.1 Remove the equipment to the cask		
	2 Remove the radial rail	2.1 Remove the radial rail to bridge between the cell and cask	2.1.1 Remove the rail 2.1.2 Fix the rail		(reverse order of No.4-1)

Table 3.1-15 Maintenance scenario of NBI ion source

No.	Main procedure	Sub procedure	Assistant procedure(pre/post work)	・Circumstances ・Space & interference	・Requirements for equipment/structure ・Tools,Remarks/Issues,etc.
12	1 Connecting HV line	1.1 Welding water cooled feed pipes	1.1.1 Positioning clamp mechanism on pipe 1.1.2 Positioning pipe welder on the clamp 1.1.3 Welding the pipe 1.1.4 Remove the pipe welder to the cask 1.1.5 Remove the clamp to the cask		-pipe welder
		1.2 Install corona shield on pipe	1.2.1 Install corona shield from the cask to the pipe 1.2.2 Connect corona shield		(reverse order of No.3-1.3)
		1.3 Install filament feed connectors	1.3.1 Grapple the filament feed by manipulator from Temporary storage place on the ion source 1.3.2 Grapple a filament feed by support arm 1.3.3 Connect filament feed conectors by manipulator		(reverse order of No.3-1.2)
		1.4 Install bus bar	1.4.1 Grapple a bus bar by support arm 1.4.2 Install bus bars from the cask 1.4.3 Connect bus bar connecting bolts by manipulator with impact wrench		(reverse order of No.3-1.1)

Table 3.1-16 Maintenance scenario of NBI ion source

No.	Main procedure	Sub procedure	Assistant procedure(pre/post work)	·Circumstances ·Space & interference	·Requirements for equipment/structure ·Tools,Remarks/Issues,etc.
13	1 Close the double seal door	1.1 Close the dome double seal door	1.1.1 Unlock the double seal door 1.1.2 Move the dome double seal door to NBI cell from back of the cask by door tilting mechanism	10^2R/h	(reverse order of No.2-2)
	2 Undocking of the cask from the NBI cell	2.1 Disconnect the cask door from the NBI Pressure vessel dome	2.1.1 Lock the dome double seal door 2.1.2 Bolte the dome flange 2.1.3 Disconnect the cask door from the dome flange		(reverse order of No.2-1)
		2.2 Undock the cask from the cell	2.2.1 Disconnect the cask from the docking flange 2.2.2 Slide the turn table		
	3 Remove the cask to maintenance hot cell	3.1 Remove the cask from NBI cell to the maintenance hot cell	3.1.1 Turn the table to the direction of corridor rail 3.1.2 Unlock the truck on the turn table 3.1.3 Move the cask on the corridor 3.1.4 Locate the cask on the lifter 3.1.5 Lift the cask from NBI floor level 3.1.6 Transfer the cask to hot cell	<1R/h atmosphere	(reverse order of No.1)

Table 3.2-1 Comparison of the bolt connection tools

Item \ Type	Hydroulic(or oil) pressure	Electric motor	Air pressure	Remark
Outline	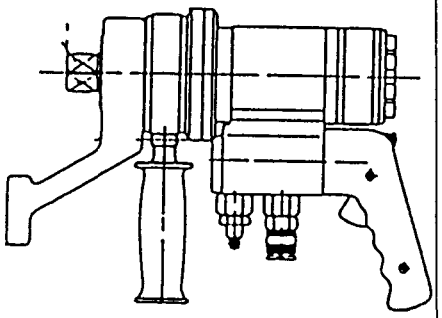	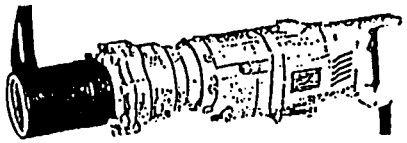	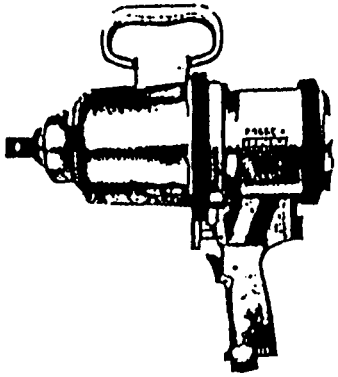	Compared with standard type
Applicable bolt size	<M45 ○	<M36 ○	<M42 ○	
Dimensions	Compact ○	Bigger owing to motor size △	Bigger than hydraulic pressure type owing to low pressure △	
Power source	Hydraulic(or oil) pump (large size) ×	Electric power supply (large power consumption) ○	Air compressor(large capacity) (large air consumption) ×	
Estimation	× ○ : Compact × : large pump, and apprehension of leakage	○ ○ : Minimum application △ : large dimensions	△ △ : Compact × : large compressor, and apprehension of air contamination	

Table 3.2-2(1) Docking procedure of the transfer cask

No.	Item	Condition	Motion	Remarks
1	Close air supply valve and exhaust valve of air spring level control.	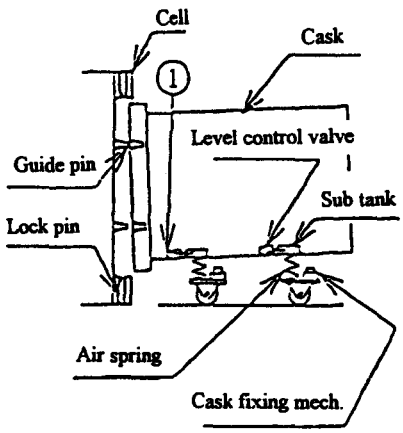	Cask level and orientation is aligned along guide pins.	
2	Cask docking to cell	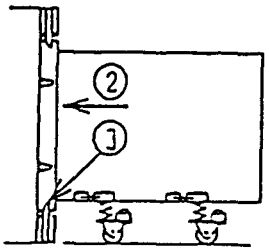	(1)Cask is roughly positioned by guide pins (2)Misalignment of cask level and orientation is absorbed by air spring	
3	Cask locked by clamps of cell		Cask is fixed by inserting cotters from cell to the final position and seal tightness is maintained between cask and cell.	
4	Double-seal door open			
5	Cask is supported by cask fixing mechanism (jacks).	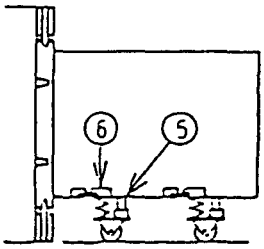	The cask is supported by jacks so as to keep the level constant during transportation of componets and RH equipment.	
6	Air in air spring is released.			
7	Maintenance operation			
8	double-seal door close			

Table 3.2-2(2) Docking procedure of the transfer cask

No.	Item	Condition	Motion	Remarks
9	Cotters to lock cask to cell is released	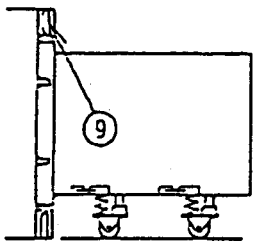		
10	Cask undocking	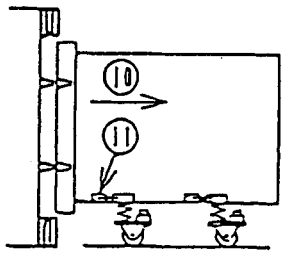		
11	Open air supply valve and exhaust valve of air spring level control		Cask is supported by air springs.	
12	Cask fixing mechanism is lowered.	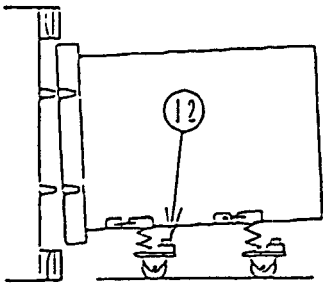	Cask level is controlled by automatic leveling mechanism of air spring.	

Table 3.2-3 Comparison of seal methods for double-seal door

No.	Material	Characteristics	Demerits	Construction	Remarks
1	Metal O-ring	1)High temp. & high vacuous useage 2)High resistance to radiation exposure 3)Gas leak rate is very low	1)Pressing torque is large (Approx.30kgf/mm) 2)Repeat usage is difficult because of shape transformation 3)Contact surface must be touch up Ra0.4-0.8 4)Difficult to follow	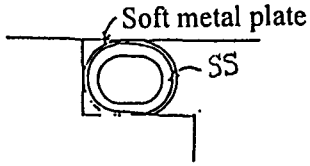	
2	Metal C-ring	1)High temp. & high vacuous useage 2)High resistance to radiation exposure 3)Gas leak rate is very low 4)Little pressing torque than Metal O-ring (Approx. 13kgf/mm)	1)Pressing torque is large 2)Repeat usage is difficult because of shape transformation 3)Contact surface must be touch up Ra0.4-0.8 4)Difficult to follow	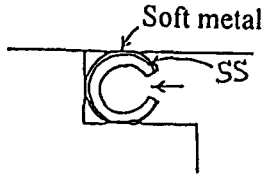	
3	Rubber O-ring	1)Compact 2)Easy install 3)Many precedent and high reliability 4)Inexpensive 5)Contact surface may be touch up Ra 1.6 6)Pressure torque is approx.1/10 x Metal O-	1)Resistance to radiation exposure : $5x10^6$ Gy 2)Gas leak rate is not very low	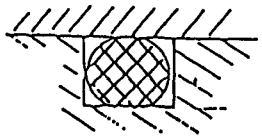	Rubber material *NBR *EPR *Cloro-sulphate-ethylene rubber
4	Rubber packing	1)followable to surface (easy transformation of rubber)	1)Resistance to radiation exposure : $5x10^6$ Gy 2)Gas leak rate is not very low 3)Necessary to construction to easily transform the rubber	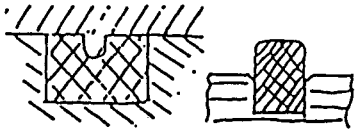	Rubber material *NBR *EPR *Cloro-sulphate-ethylene rubber
5	Rubber inflate seal	1)1)followable to surface (easy transformation of rubber) 2)Pressing torque is not necessary 3)Contact consumption is little 4)Contact surface may be touch up Ra 1.6	1)Resistance to radiation exposure : $5x10^6$ Gy 2)Gas leak rate is not very low 3)Necessary to give pressure air 4)Air leackage cause lose seal	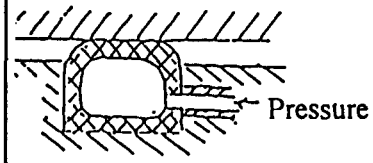	Rubber material *NBR *EPR *Cloro-sulphate-ethylene rubber

Table 3.2-4 Comparison of the seal material

Item \ Type	Metal		Rubber			Remarks
	Metal O-ring	Metal C-ring	Rubber O-ring	Rubber packing	Rubber inflate	
Tightness	◎	◎	○	○	○	Metal is better
Resistance to pressure	◎	◎	○	○	○	Metal is better
Tritium tightness	◎	◎	○	○	○	Metal is better
Repeatable usage life	×	×	◎	◎	◎	Rubber is better
resistance to radiation exposure	◎	◎	○	○	○	Metal is better Shield is necessary for rubber
Tightten force	×	△	○	○	◎	Rubber is better
Maintenability	○	○	◎	◎	◎	Rubber is better
Cost	△	△	◎	◎	○	Rubber is better
Reliability	◎	◎	◎	◎	△	
Construction	△	△	○	◎	○	Rubber is better
Estimation	×	×	◎	◎	△	Rubber O-ring , packing are better

Table 3.2-5 Comparison of the connection methods for the double seal door

No.	Idea / Item	Bolting type (same as NBI cell flange docking mech.)	Cotter pin type	Clamp type	Remarks
1	Outline	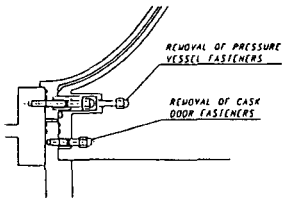	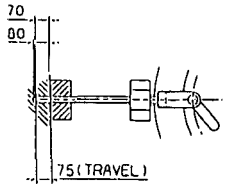		
		*Bolts set on MDD(Maintenance double-seal door) flange *Nuts set on cask flange *In-cask manipulator and bolting equipment accomplish bolting/unbolting	*Cotter pin and cotter pin press mech. are set on cask flange(or MDD) *Wedge effect accomplish docking *Cotter pin press mech. is mechanical type or oil cylinder type	*Clamp and clamp drive mech. are set on cask flange(or MDD) *Clamp power accomplish docking *Clamp drive mech. is mechanical type or oil cylinder type	
2	Merits	*Tightness is reliable *Flange thickness is less than other type *Self lock	*No. of cotters is less than bolt type *Thin mechanism *Hardly stick on connect point	*No. of cotters is less than bolt type *Hardly stick on connect point	
3	Demerits	*No. of bolts is much than other type *Length of bolt axis direction is much than other type *stick on bolt	*Thick flange *Dimension of flange radius direction is much than bolt tipe *Mech. to privente from looseness is necessary	*Thick flange *Dimension of flange radius direction is much than bolt tipe *Mech. to privente from looseness is necessary	
4 4.1	Applicablity Cask flange - cask door	*Large cask flange width is necessity because of parallel setting with cell flange connecting mech. *Flange thickness is much	*Door-door space is usable to set *Operate from inside of cask Applicable	*Hard to set mech.on account of space	
4	Cask door - cell door	*Large cask flange width is necessity because of parallel setting with cell flange connecting mech. *Flange thickness is much	*Door-door space is usable to set *Operate from inside of cask Applicable	*Hard to set mech.on account of space	
4	Cell flange - cell door	*Same as cell flange docking Applicable	*Difficult to drive the pin through cask maintenance door *Mechanism to privente from looseness is necessary	*Difficult to drive the clamp through cask maintenance door *Mechanism to privente from looseness is necessary	
5	Estimation	*Open/close operation use time, but tightness is reliable *Rotation space is affected by thickness of door	*Open/close operation time is short *Dimension of flange radius direction is much than bolt tipe	*Open/close operation time is short *Dimension of flange radius direction is much than bolt tipe	

Maintenance double-seal door docking mechanism

*Cask flange and cask MDD : Cotter pin type setted cask flange side

*Cask MDD and cell MDD : Cotter pin type setted cask side

*NBI cell flange and cell MDD : Bolting type

Table 3.2-6 Comparison of the lip seal cutting methods

Item \ Type	Mechanical type		Melting type	Remark
	Grinder type	Shear type		
Outline	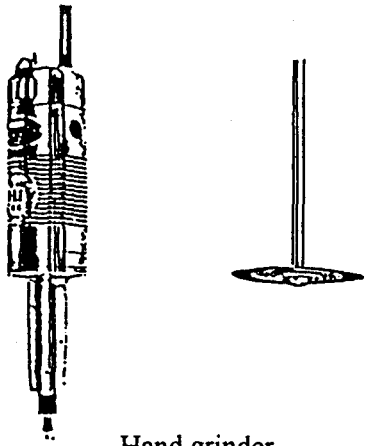 Hand grinder	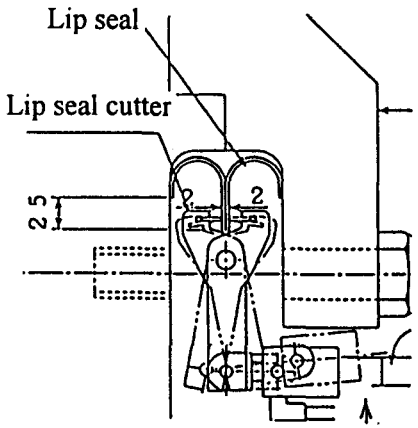	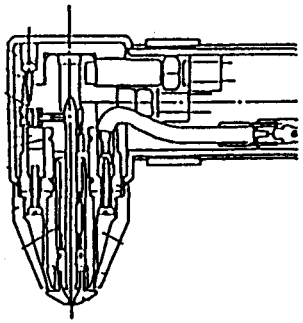 plasma torch	
Cutting ability	*Cutting width is thin *Thermal influence is little ○	*Cutting width is thin *Thermal influence is little *Cutting line is polygonal ○	*Cutting width is thick *Thermal influence is large △	
Welding ability	*Cutting quality is good to re-weld ○	*Cutting quality is good to re-weld, but it is necessary to touch up cutting surface or to control rewelding line △	*It is necessary to touch up the cutting surface. △	
secondary products and recovery	*Recovery system for cutting small powder is necessary △	*Recovery system for cutting pieces is necessary, but easy system ○	Recovery system for spatter and dust is necessary ×	
Estimation	△ *Cutting quality is better than shear type, but cutting dust recovery is difficult	○ *cutting line is non-linear and polygonal, but cutting piece recovery is easy.	× *Lip seal repeat usage is few times	

Table 3.2-7 Comparison of traveling methods for the lip seal cutting/welding tool

Type / Item	Manipulator handling type	Guide rail type			Remark
		Chain drive	Ball screw	Wire rope	
Outline	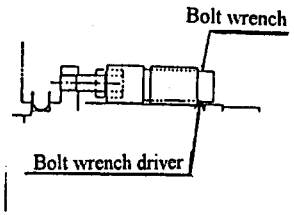	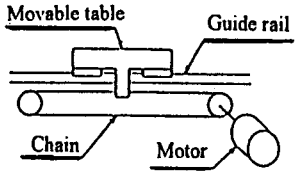	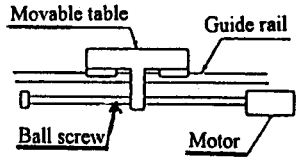	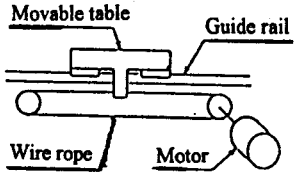	
Positioning ability	*Usable the flange as guide ○	*Better positioning accuracy ○	*Best positioning accuracy, but must move step as curved object △	*low positioning accuracy due to wire elongation and slip △	
Handling ability	*in-cell permanent support is not necessary ○	*Temporaly rail is necessary, and operation time is extended △	*Temporaly rail is necessary, and operation time is extended △	*Temporaly rail is necessary, and operation time is extended △	Establish as permanent setting
Maintenance ability	*Good assembling ability ○	*Good assembling ability ○	*Good assembling ability ○	*Good assembling ability ○	
Estimation	○ *Usable the flange as guide	△ *Setting time is long	× *Setting times are many depend on ball screw length	× *Setting time is long	

Table 3.2-8 Comparison of the rail connection types

No	Item \ Type	Mainipulator moving type	Pantograph type	Rotation type	Parallel link type	Rail slide type
1	Outline	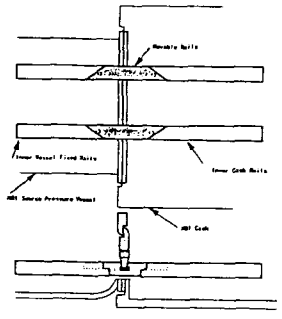	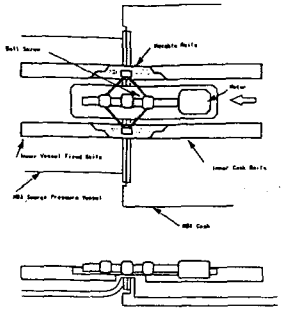	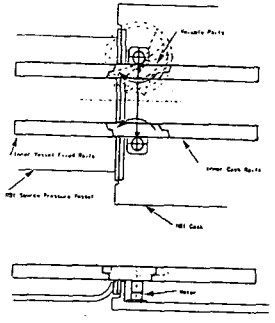	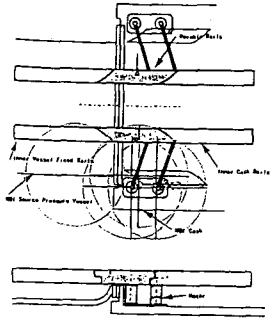	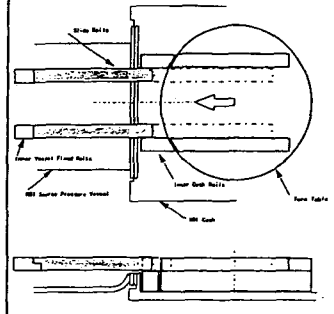
	Concept	:Temporary set One rail to every side in cask :After openning the double-seal door,set each rail by manipulator.	:Rails are stored inside by pantograph mechanism :After opening double-seal door, rails are slided and opened at connecting position.	:Rail are stored inside by rotation mechanis. :Agter opening double-seal door, rails are rotated and connected by rotation mechanism.	:Rails are stored outside by parallel link mechanism :After opening double-seal door, rails are moved parallel and connected by parallel link mechanism	:Rails are stored in turntable :After opening double-seal door, rails are slided and extended in vessel :Ion source carryer runs each rails of inside and outside
2	Components	:Extension rails(with guide pins)	:Rail slide mechanism :Rail open/shut mechanism :Connecting rails	:Rail rotation mechanism :Connecting rails	:Rail moving mechanism(parallel link type) :Connecting rails	:Rail slide mechanism :Extension rails
3	Advantages	:Simple components	:Wide capacity of Connecting position	:Comparatively simple mechanism	:Comparatively simple mechanism	:Few components in vessel :Rough Accuracy of rail positioning in vessel
4	Dosadvantages	:Rail weight is limited by manipulator capacity(eg.100x100x1000mm Rail= approx.80kg :can't handling)	:Complicated mechanism :Necessary to avoid from interference with turntable	:Necessary to avoid from interference with double-seal door	:Entrance dimension in vessel is limited :Necessary to avoid from interference with in-cask rails	:wide cask :Complicated turn-table mechanism :Difficult to balance of load on each wheel
5	Estimation	:Hard to adopt this type because of manipulator capacity :Necessary to absorb the cask position misalignment	:Complicated mechanism :Necessary to store in turn-table :Necessary to absorb the cask position misalignment	:Necessary to positioning with double -seal door :Necessary to absorb the cask position misalignment	:Necessary to avoid from interference with in-cask rails :Necessary to absorb the cask position misalignment	:Necessary to investigate running balance
6	Remarks					

Table 3.3-1 Comparison of the manipulator carrier

No.	Idea / Item	Suspension type	Suspension double rail type	Overhead type
1	Outline	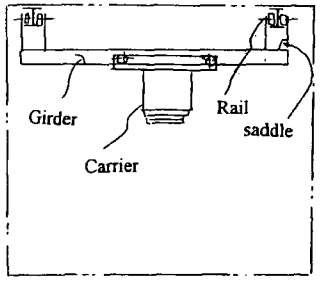	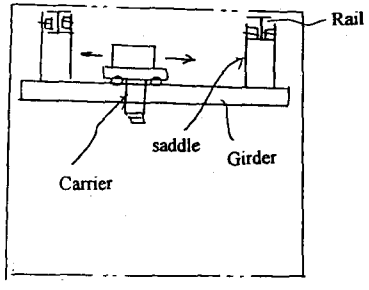	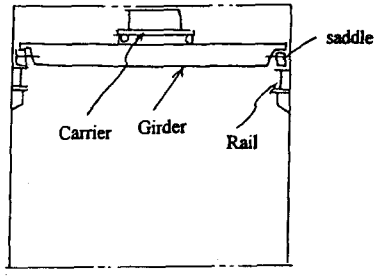
		*Saddles are hung with rails on the ceiling *Girder rail is hung with saddles *Carrier is hung with girder rail	*Saddles are hung with rails on the ceiling *Girder double rails are hung with saddles *Carrier is put on girder double rails upside	*Rails are put on the support supported on side walled *Saddles are put on rail *Girder double rails are put on saddle *Carrier is put on girder double rails upside
2	Construction	*Carrier *Low head type saddles *Suspension type girder	*Carrier *Low head type saddles *Double rail type girder	*Carrier *Over head type saddles *Double rail type girder
3	Merits	*Carrier can approach side wall nearer than doublerail type *Side wall is use free	*Carrier can approach side wall nearer than doublerail type *Side wall is use free	*Simple constructions of girder and carrier *Cask ceiling is not requested strength by carrier
4	Demerits	*Support of carrier is complex *Cask body must be strengthened	*Across travelling span is shorten because of girder and saddle position *Cask body must be strengthened	*Side wall cannot use free by rail supports
5	Estimation	*Maintenance double-seal door can be stored on side wall *Complex layout disturbs maintenability	*Maintenance double-seal door can be stored on side wall	*Maintenance double-seal door cannot be stored on side wall
6	Remarks			

Table 4.2-1 Comparison of the communication methods

Type / Item	Contact type		Non-contact type		
	Connector transmission	Trolley transmission	Closed combination wireless	wireless transmission	Optical space transmission
Outline	Remote connector transmits signal between terminals	Brush contacts trolley	Twist cable and close combination unit	Wireless with Antena or leakage concentric cable	Infrared rays
Characteristics		*Easy control with sequencer	*Communicable all route	-	Communicable point to point
Maker	-	Hitachi, Matsushita	Hitachi	-	Yagi antena,etc.
Transmitted speed	○	×	○	△	○
Image/sound	○	×	○	○	○
Controllable units No.	△ (depend on No. of line)	△ (few)	○ (many)	△ (few)	△ (few)
Maintenability	△ (wear-out)	△ (wear-out)	○	○	○
Reliability	× (noise)	× (noise)	○	× (noise)	△
Electric wave law	○ (out of regulation)	○ (out of regulation)	○ (not need license)	△ (need license)	○ (out of regulation)
Estimation	△ (control depends on No. of line)	× (noise)	◎	× (noise)	○

Table 4.2-2 Comparison of the power supply methods

Type / Item	Trolley type			Battery type
	On Ceiling	On side wall	on floor	
Outline	Power is supplied by 4 trolley lines. (assumption:usage of closed combination wireless communication)			Power is supplied by battery on cask.(assumption:usage of closed combination wireless communication)
Possession capacity	○			× (Large battery)
Reliability	○ (double trolley)			○ (enough charge)
Control simplicity	○ (easy)			△ (need DC/AC transformer)
Plural control	○ (zone control)			○ (independent supply)
Maintenability	○ (easy because of exposed equipment)			× (need battery charge)
Safety	○ (worker is hard to access)	○ (worker is hard to access)	× (worker is easy to access)	△ (ventilation at charge)
Inpact to cask	○			× (battery carry space)
Estimation	○	○ (issue is design of on the turn table)	× (Safety prob.)	× (Large battery)

Table 5.1-1 Estimation conditions for the NBI maintenance time

No.	Item	Condition
1	Destination of ion source	Hot cell
2	Destination of filament	Hot cell
3	Destination of NBI cell double seal door	Hot cell
4	3 maintenance port work	Parallel working
5	Layout	cf. **Fig. 5.1-1**
6	Traveling distance from NBI cell to hot cell - from NBI cell to equipment lift - from equipment lift to hot cell	 20 m 70 m
7	Traveling speed of cask	Max. speed : 16 m/min, Mean speed : 8 m/min
8	Height of equipment lift	20 m
9	Speed of equipment lift	Max. speed : 3 m/min Mean speed : 1.5 m/min
10	Cask traveling time - from NBI cell to equipment lift - equipment lift - from equipment to hot cell - from equipment to hot cell	26 min Min. : 2.5 min, Max. : 3 min Min. : 13.3 min, Max. : 14 min Min. : 8.75 min, Max. : 9 min

Table 5.2-1 Cost estimation result for the NBI maintenance equipment

No.	Item	Quantity	Unit	Unit price(k¥)	Estimated cost (k¥)
1	Design of fabrication	6,800	hr	7.98	52,668
2	Processing, fabrication, assembly	22,300	hr	6.92	154,316
3	Test and inspection in factory	5,600	hr	6.92	38,752
	Test jigs	1	set		
4	Assembly in spot	2,800	hr	6.92	19,376
5	Test in spot	3,000	hr	6.92	20,760
6	Equipment, material, parts	sub-total			844,800
a	Filament handling tools				
	- Replacement tools	2	set	2,600	5,200 (left & right)
	- Storage stand	1	set	1,000	1,000
b	HV handling tools				
	Bus-bar handling tool				
	- Support arm	1	set	-	3,000
	- Bolt connection arm	1	set	-	4,000
	- End-effector	1	set	-	1,000
	Connector replacement tool				
	- Support arm	1	set	-	4,000
	- End-effector	1	set	-	2,000
	Pipe welding/cutting tools	1			
	- Support arm for pipes	1	set	-	1,000
	- End-effector	1	set	-	1,000
	- Pipe cutting tool	1	set	-	5,000
	- Pipe welding tool	1	set	-	7,000
	- Pipe alignment tool	1	set	-	1,600
	- Dust collecting tool	1	set	-	4,000
	Ion source handling tools				
	- Lip seal cutting tool	1	set	-	6,000
	- Lip seal welding tool	1	set	-	8,000
	- Flange bolt connecting tool	1	set	-	6,000
	- Flange setting rail	1	set	-	20,000
	- Transporter	1	set	-	65,000
c	Transfer cask				
	- Cask body	1	set	-	100,000
d	Control unit	1	set	-	200,000
e	Manipulator				
	- Main manipulator	1	set	-	100,000
	- Overhead crane mechanism	1	set	-	150,000
	- Support arm	1	set	-	15,000
f	Double seal door	1	set	-	25,000
g	Maintenance double seal door	1	set	-	20,000
h	Monitoring system	1	set	-	25,000
i	Turn & tilting mechanism	1	set	-	65,000
7	Total				1,130,672

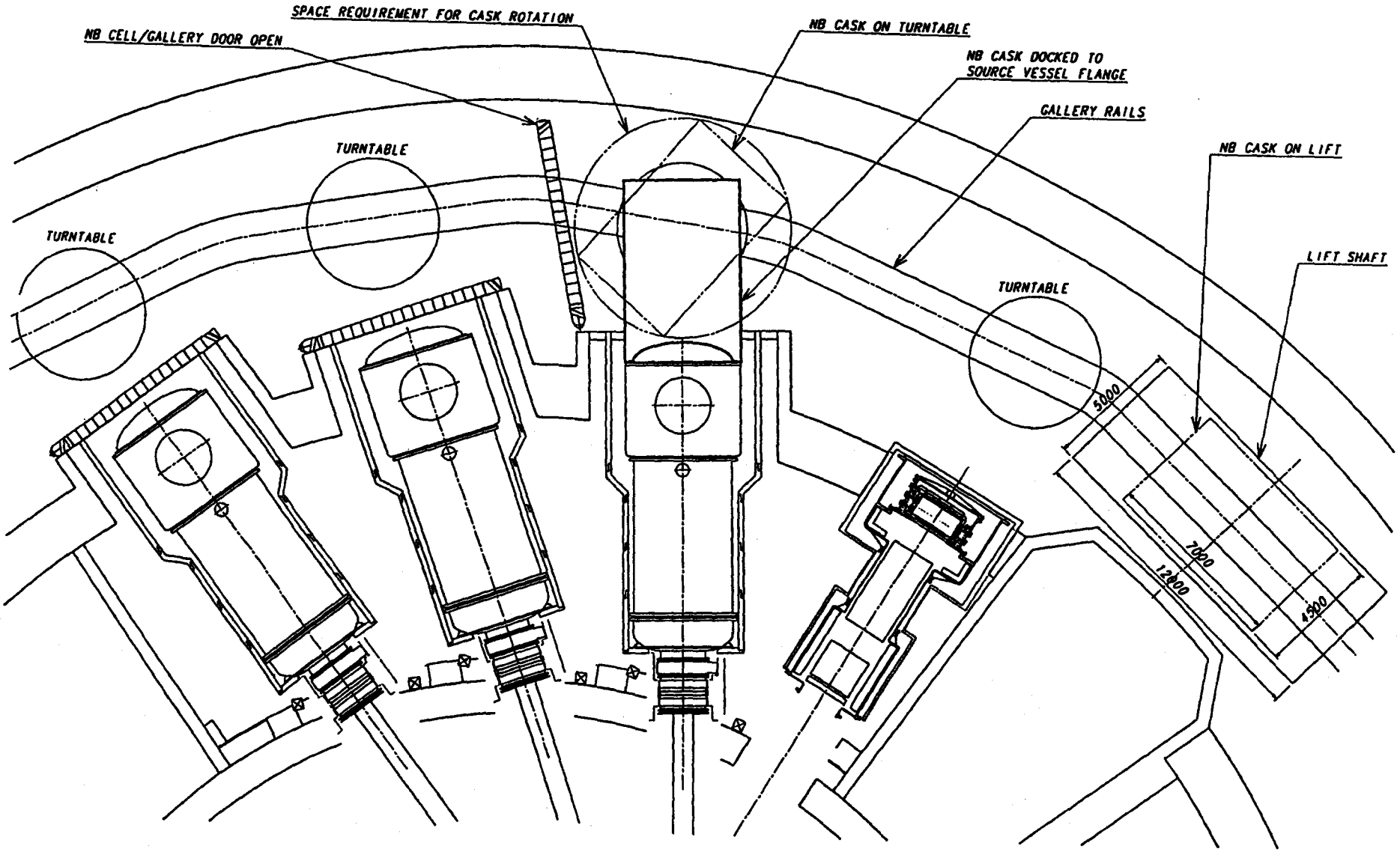

Fig.1.4-1 Layout of the NBI cells

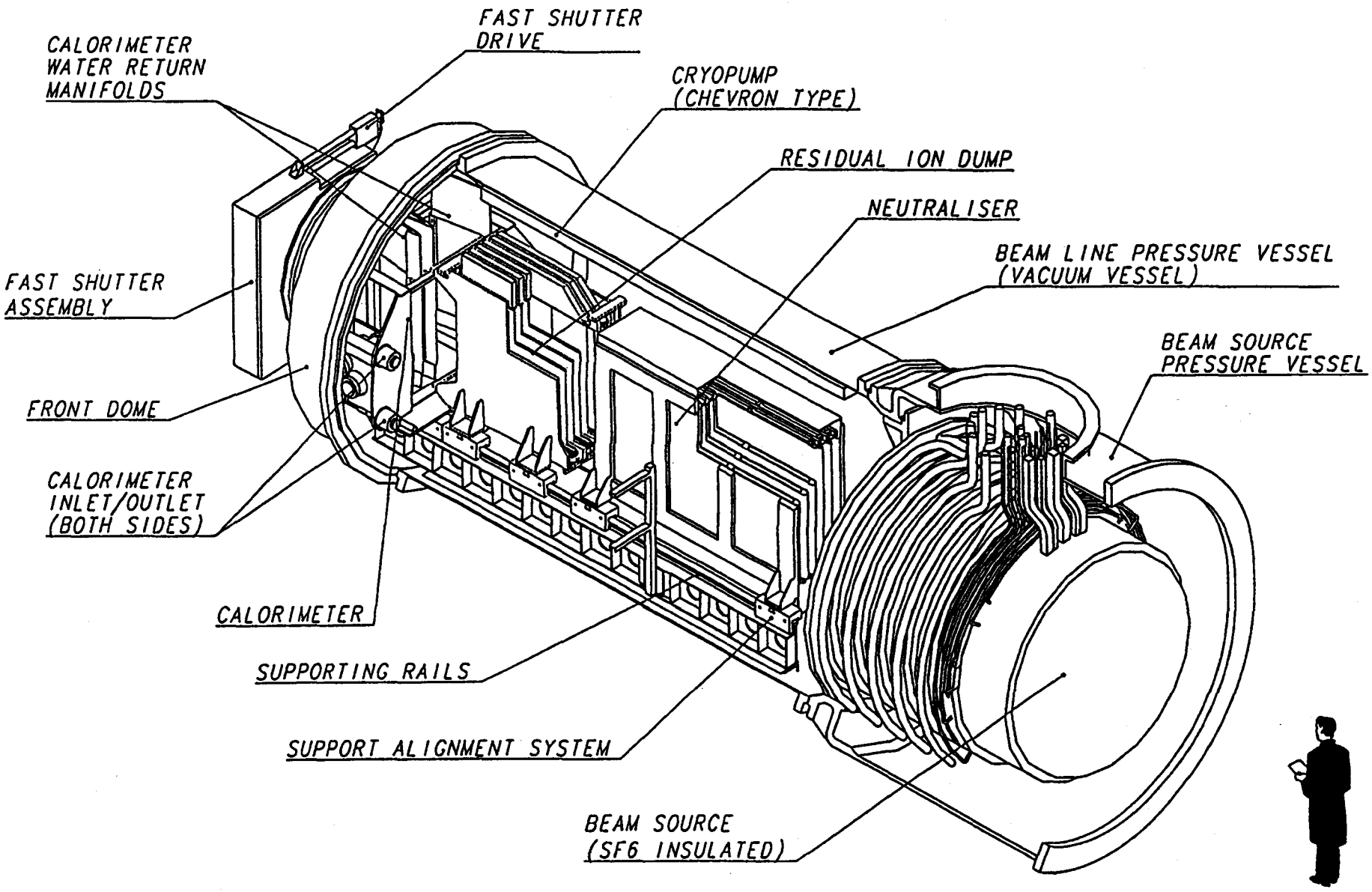

Fig.1.4-2 Full view of the NBI

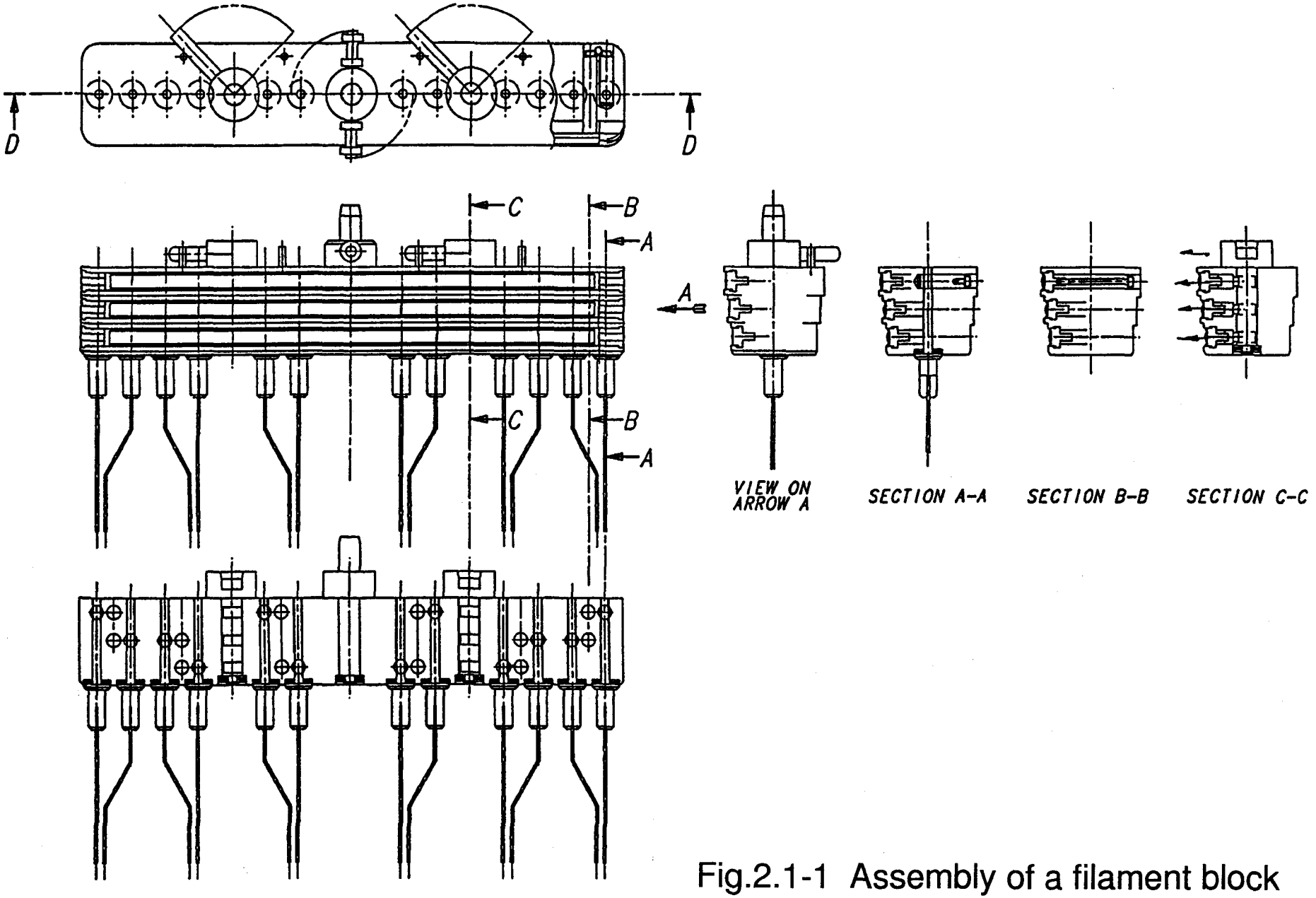

Fig.2.1-1 Assembly of a filament block

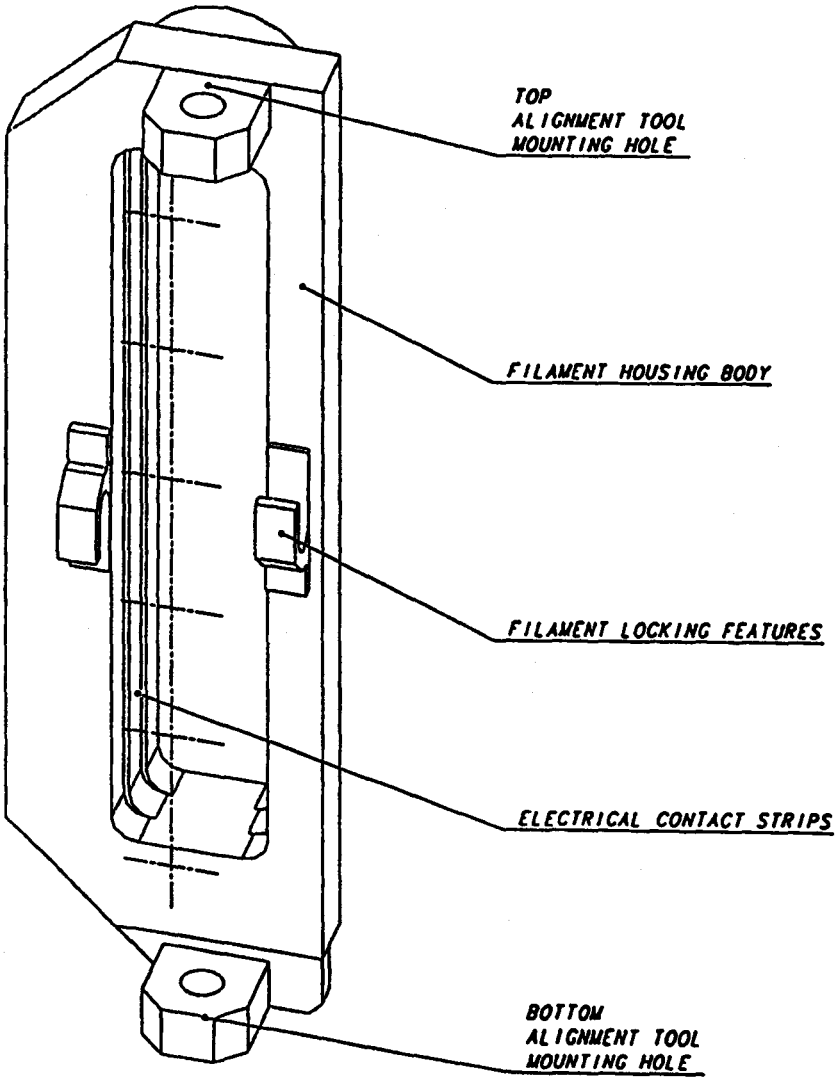

Fig.2.1-2 Assembly of a filament housing

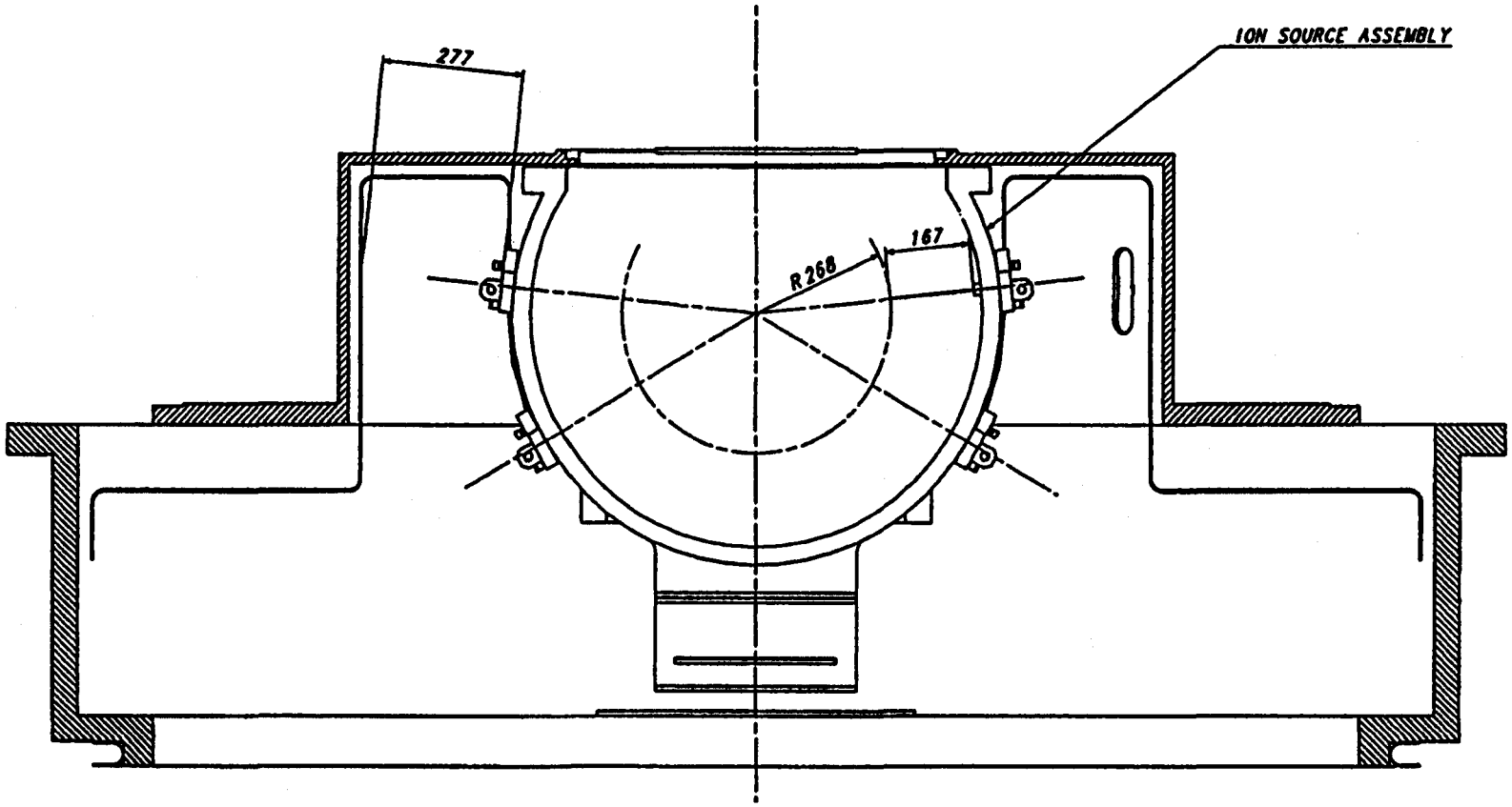

Fig.2.1-3 Plan view of the ion source

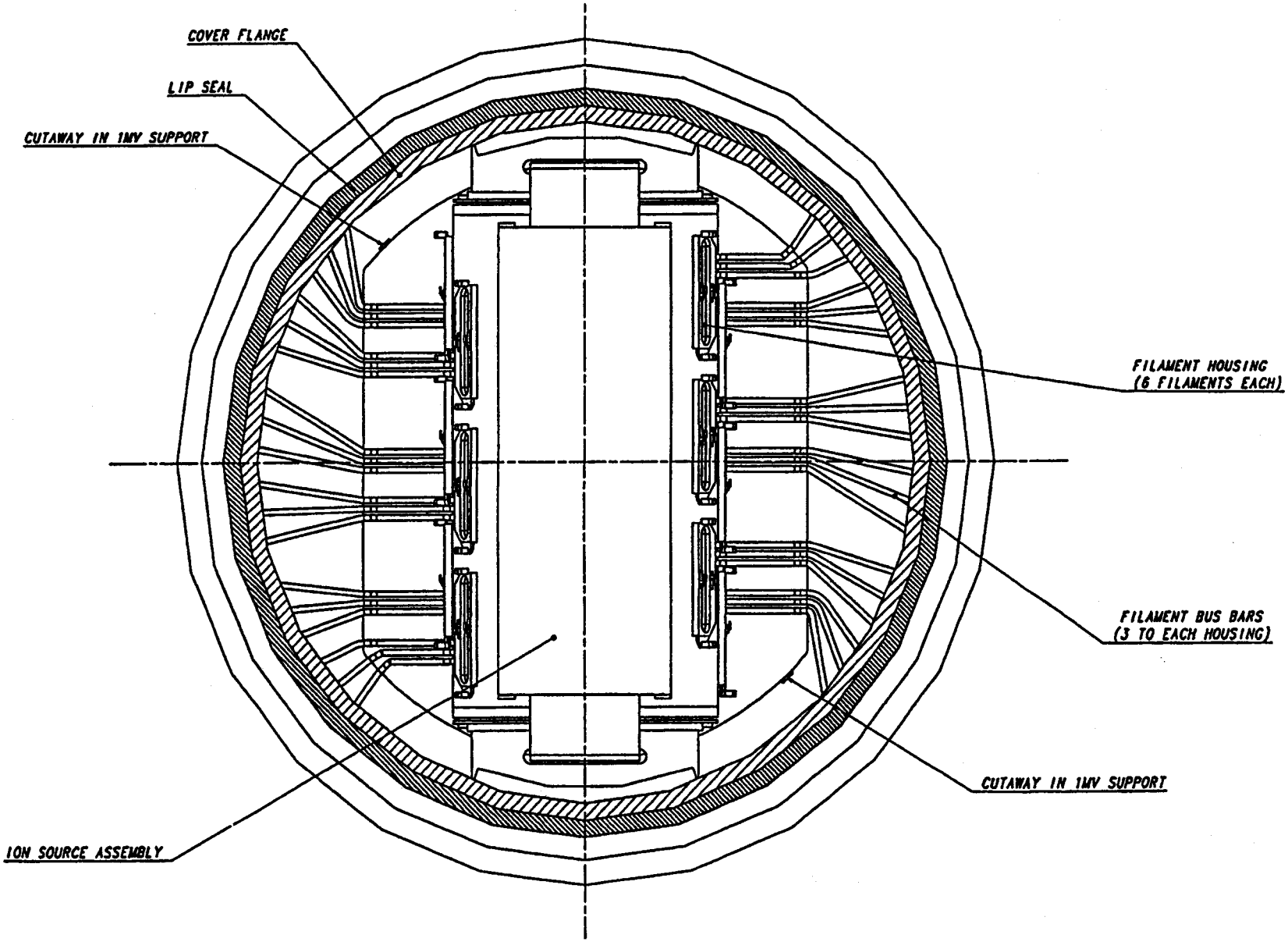

Fig.2.1-4 Elevation view of the ion source

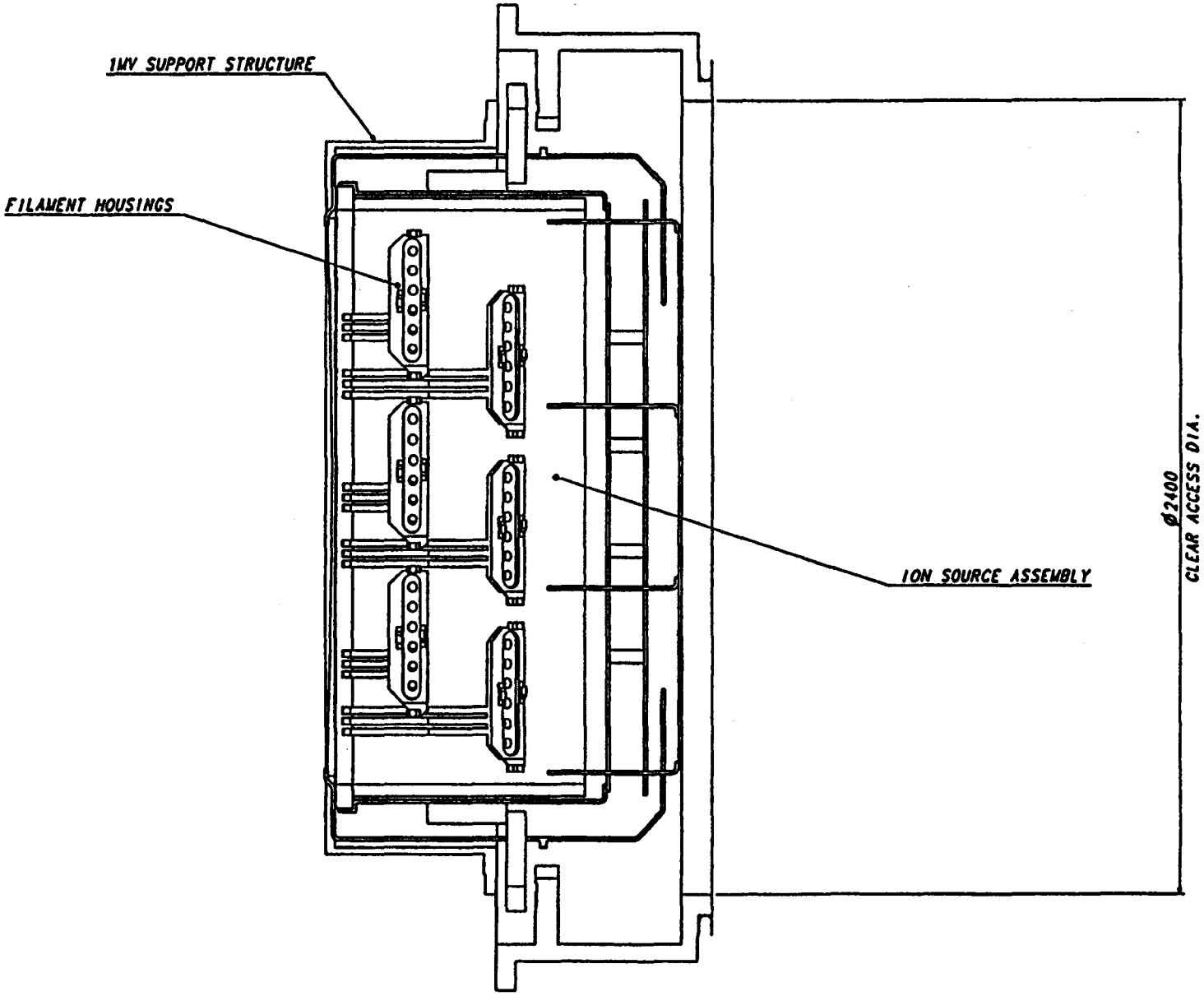

Fig.2.1-5 Side elevation view of the ion source

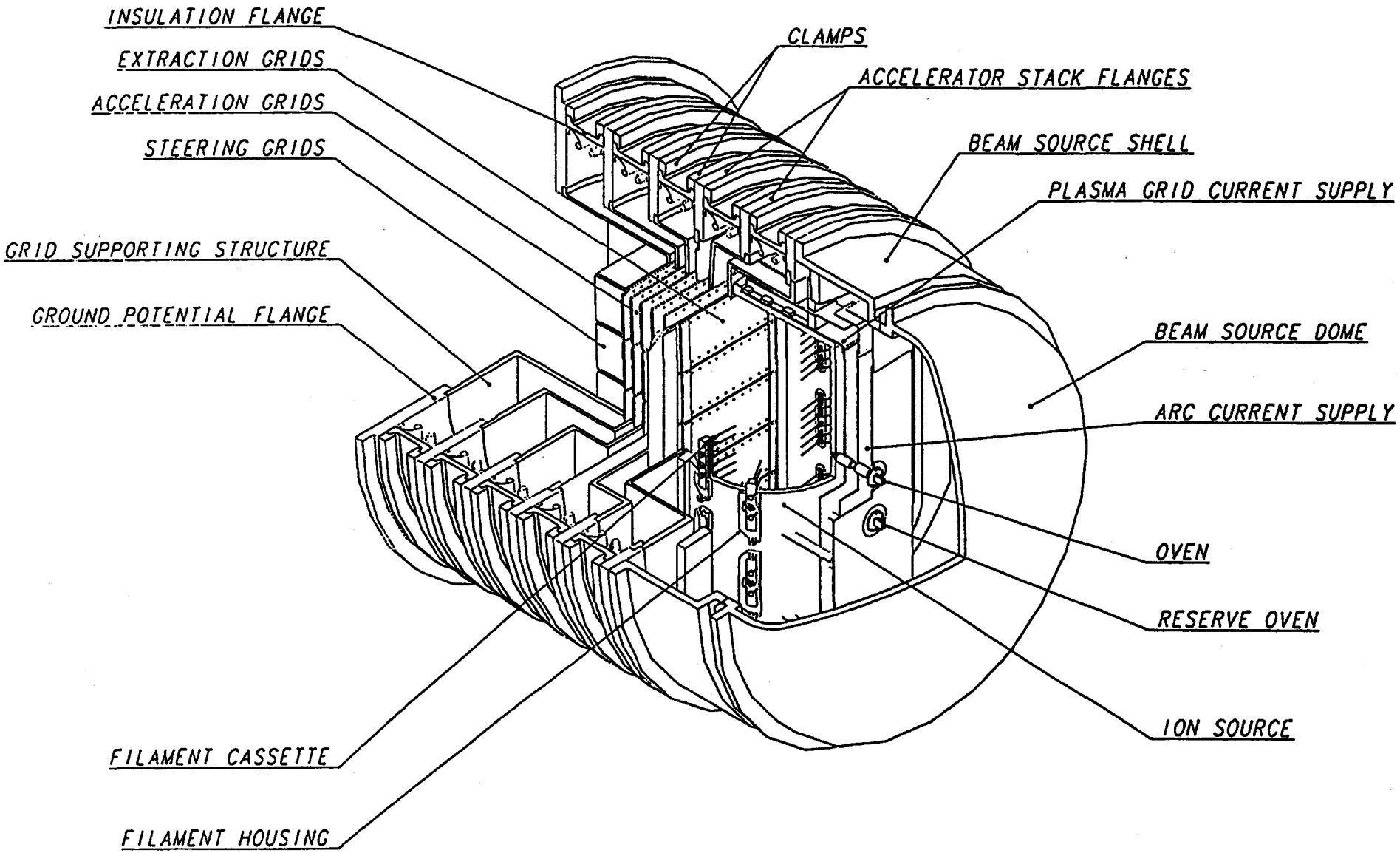

Fig.2.1-6 3-D view of the NBI beam source

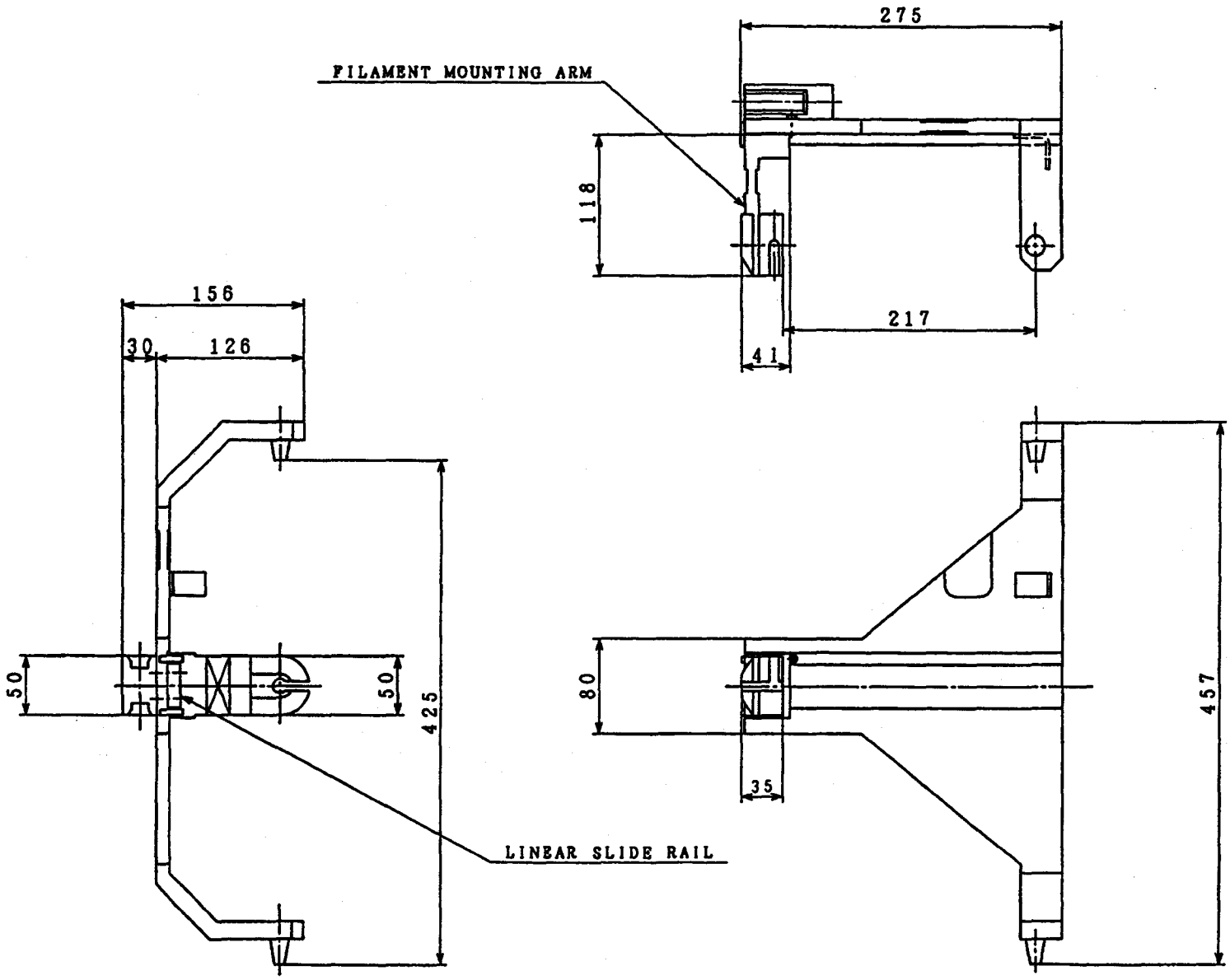

Fig.2.2-1 Dimension of the filament handling tool

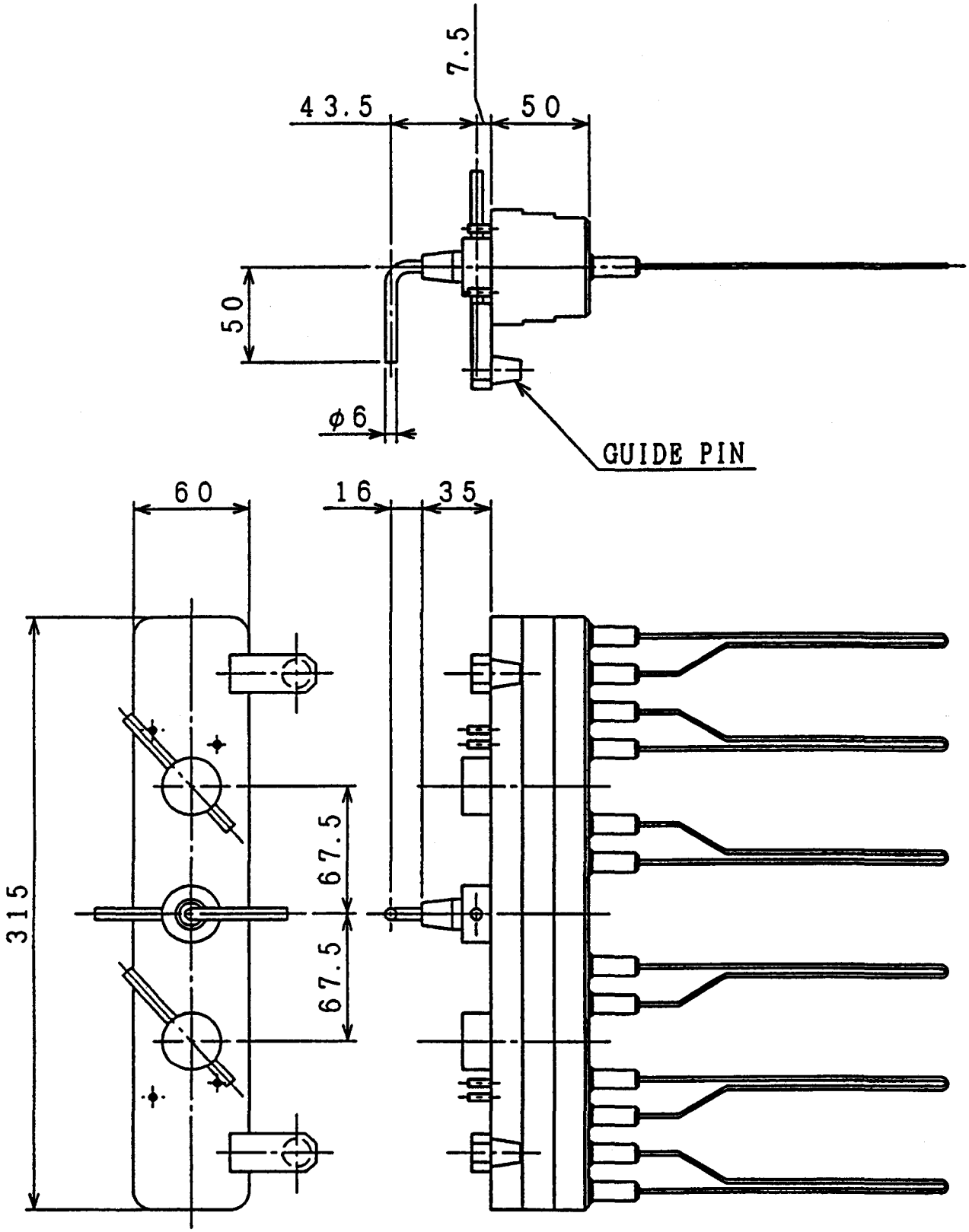

Fig.2.2-2 An optimized filament block

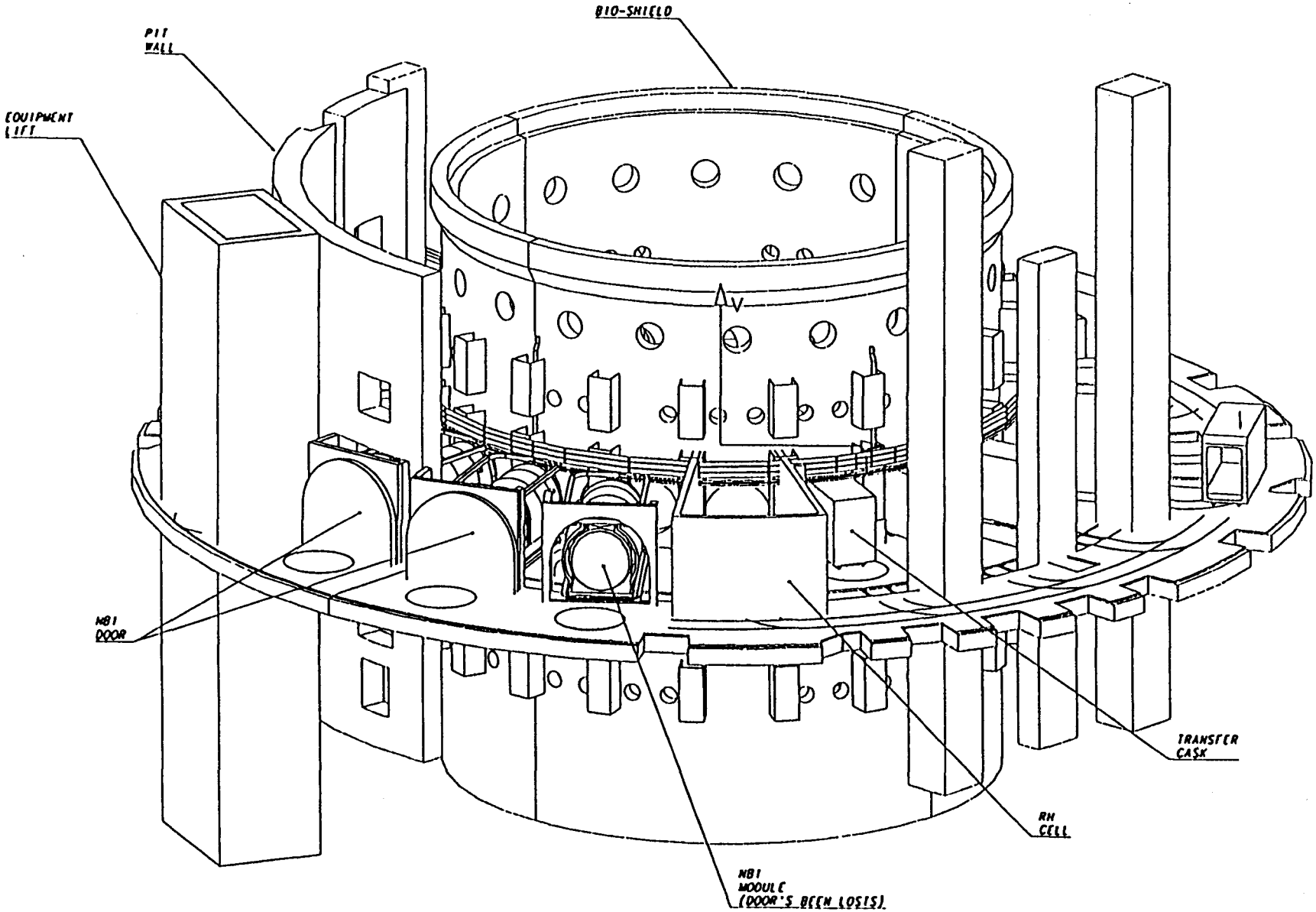

Fig. 3.1-2 NB turntable and gallery rails

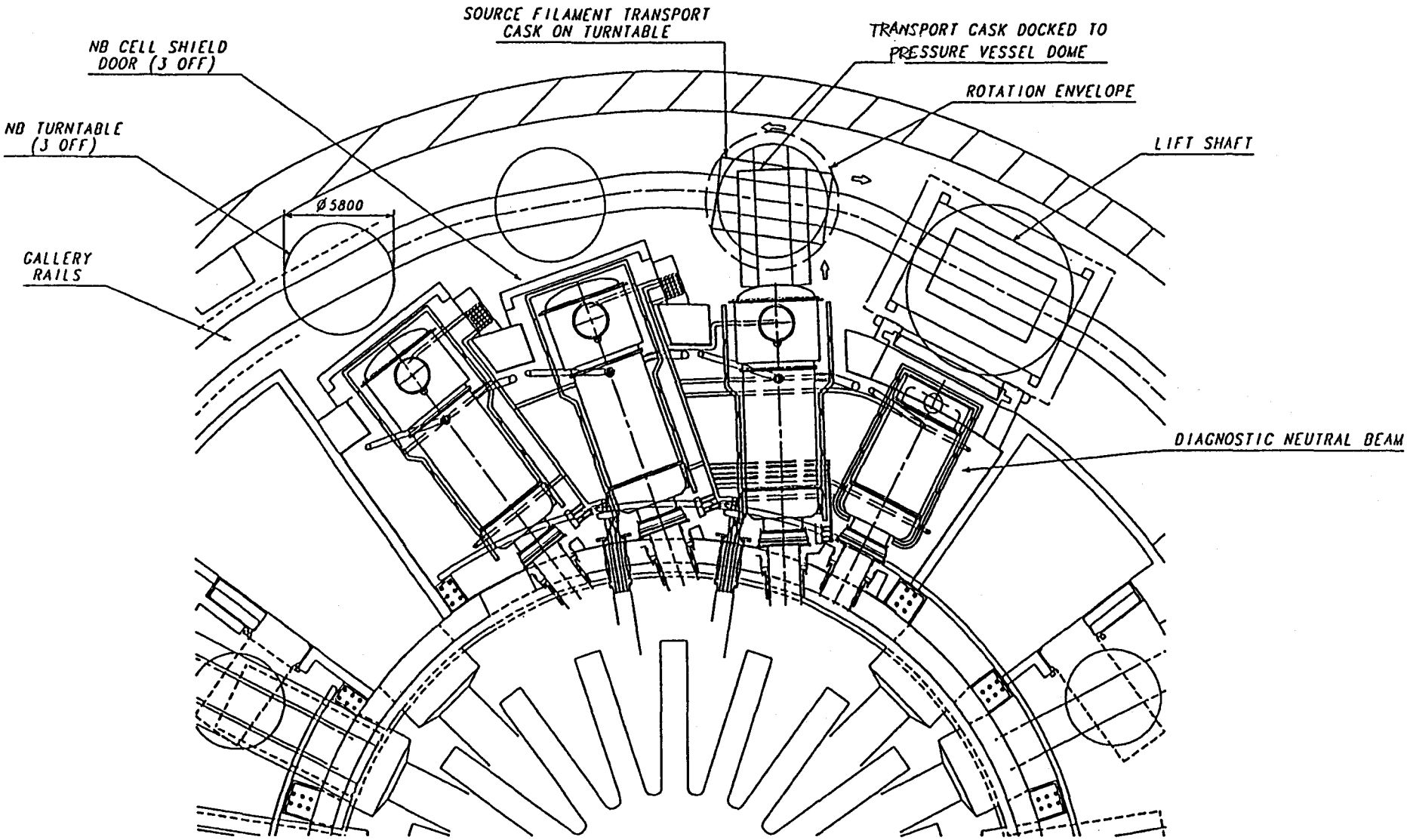

Fig. 3.1-2 NB turntable and gallery rails

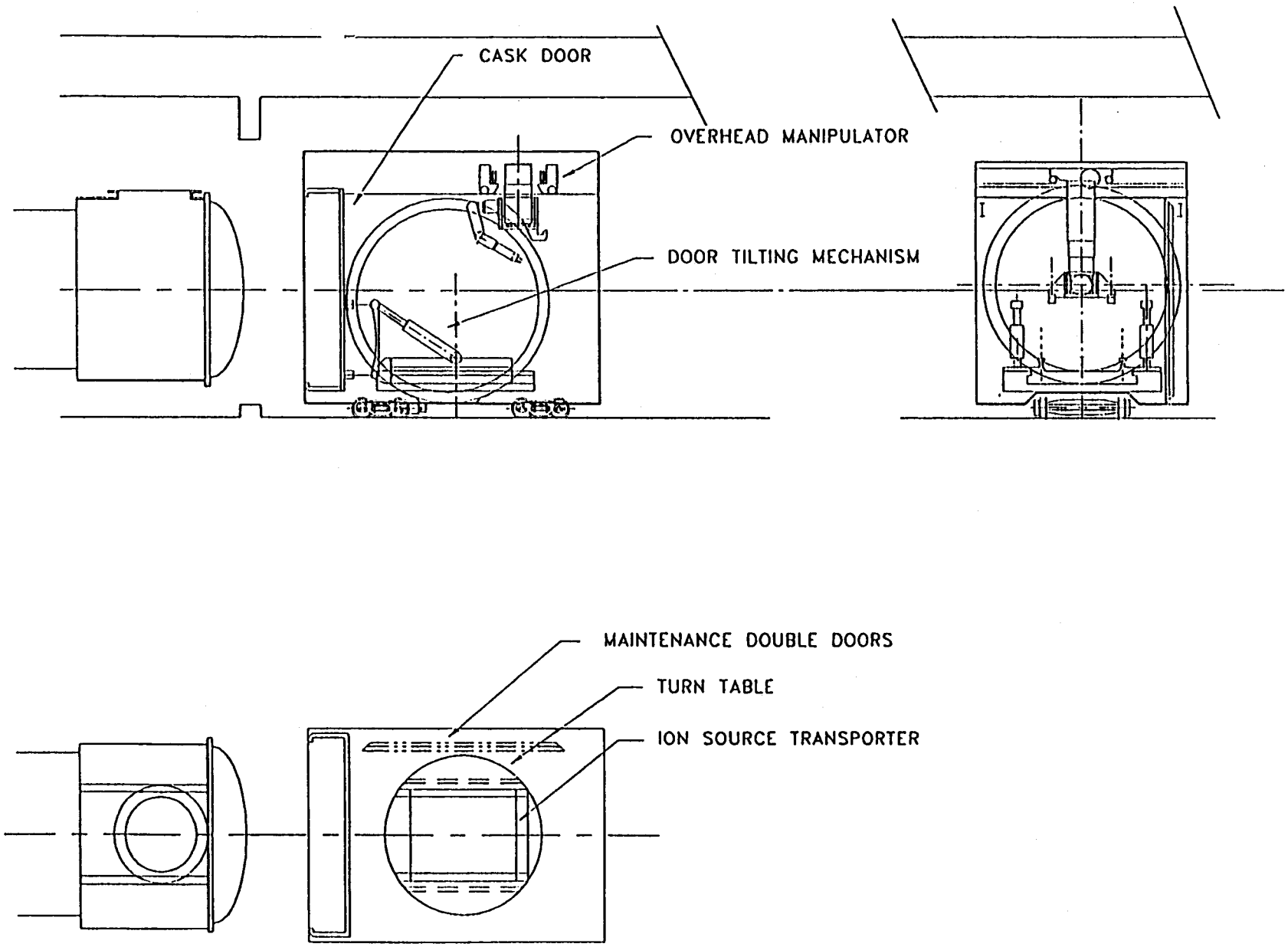

Fig. 3.1-3 Transfer cask prior to dock

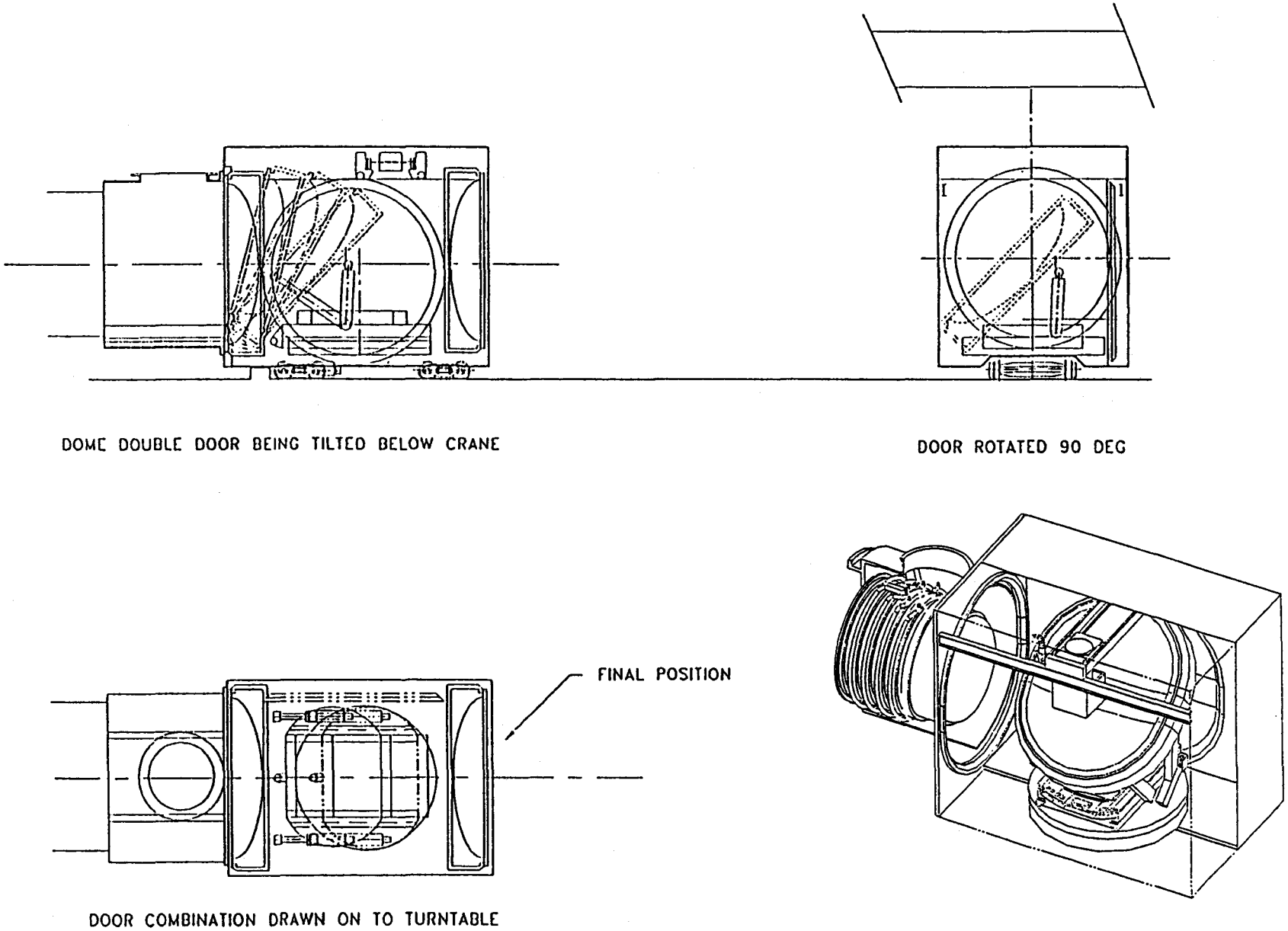

Fig. 3.1-4 Docking of cask and removal of double seal door

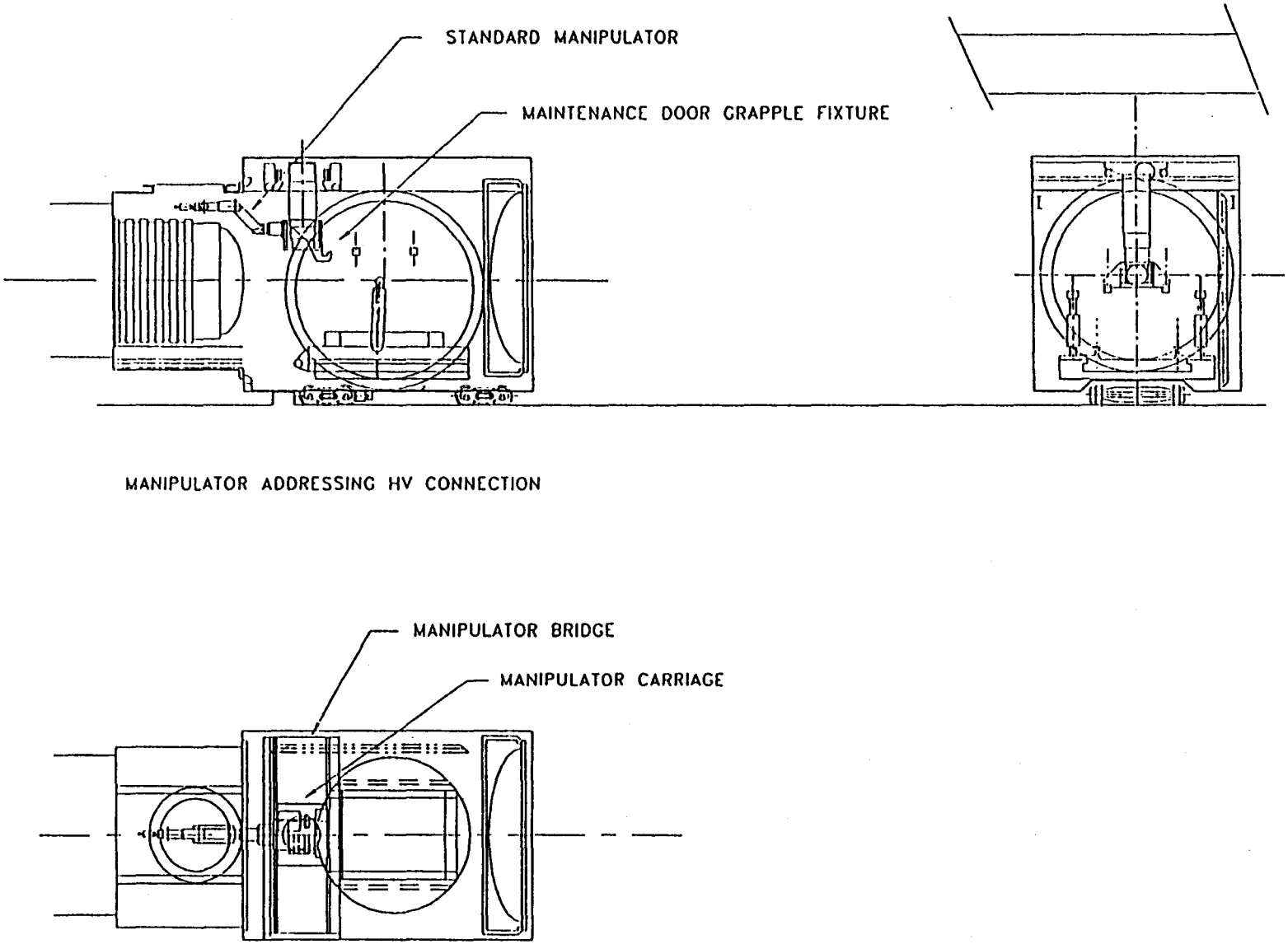

Fig. 3.1-5 Overhead manipulator for disconnecting HV line

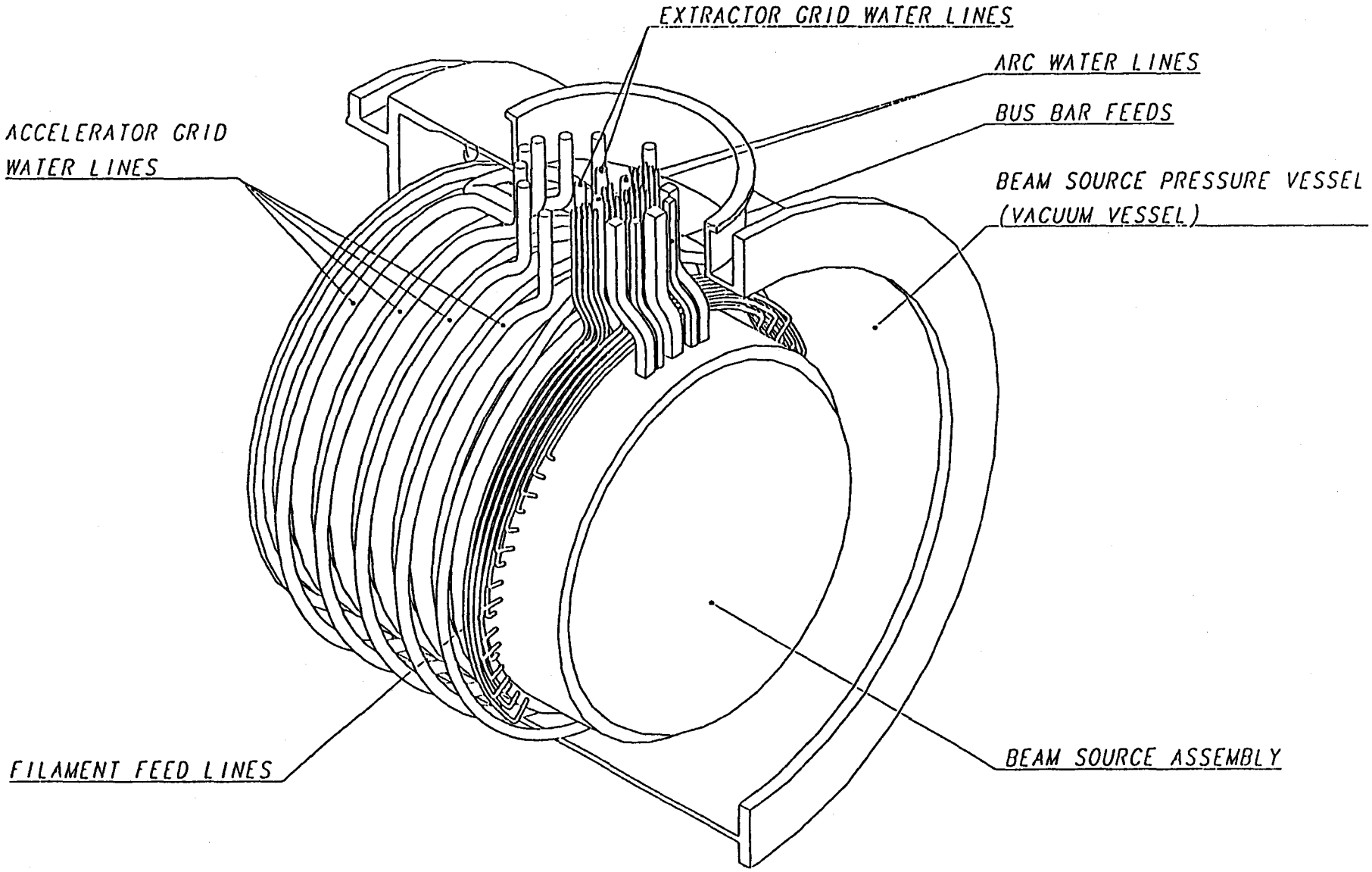

Fig. 3.1-6 3-D view of NBI ion source

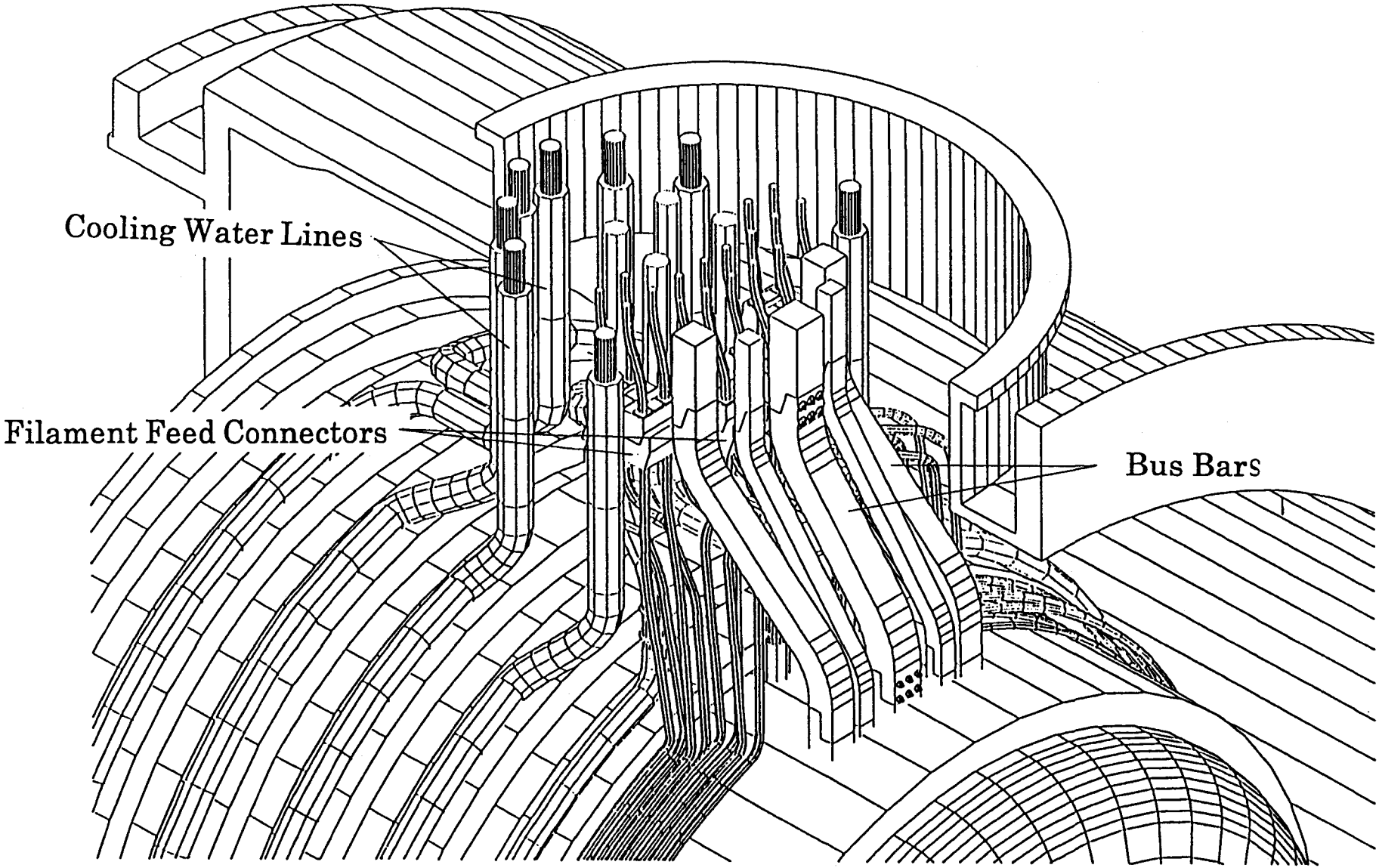

Fig. 3.1-7 3-D view of HV connection

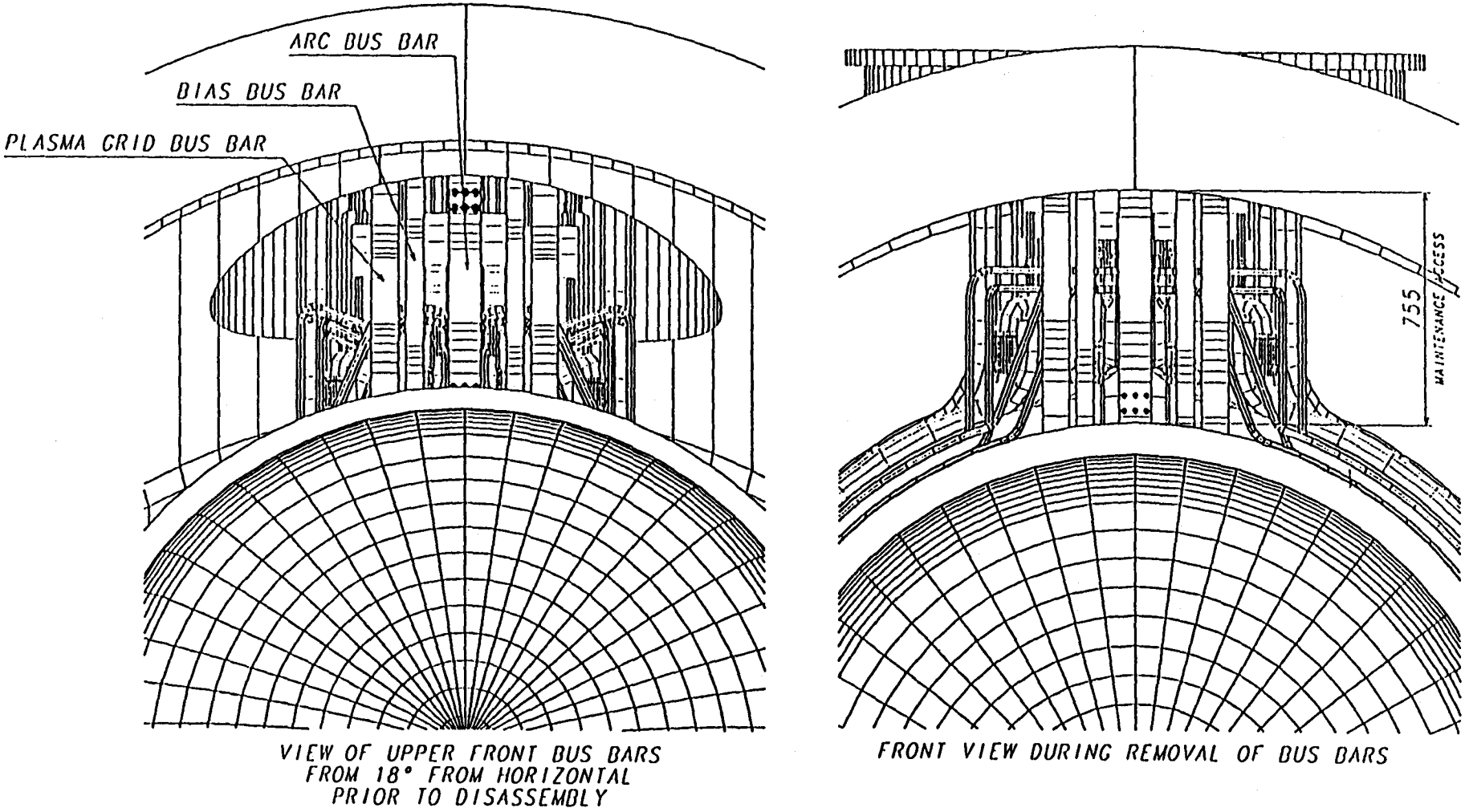

Fig. 3.1-8 Removal of bus-bars

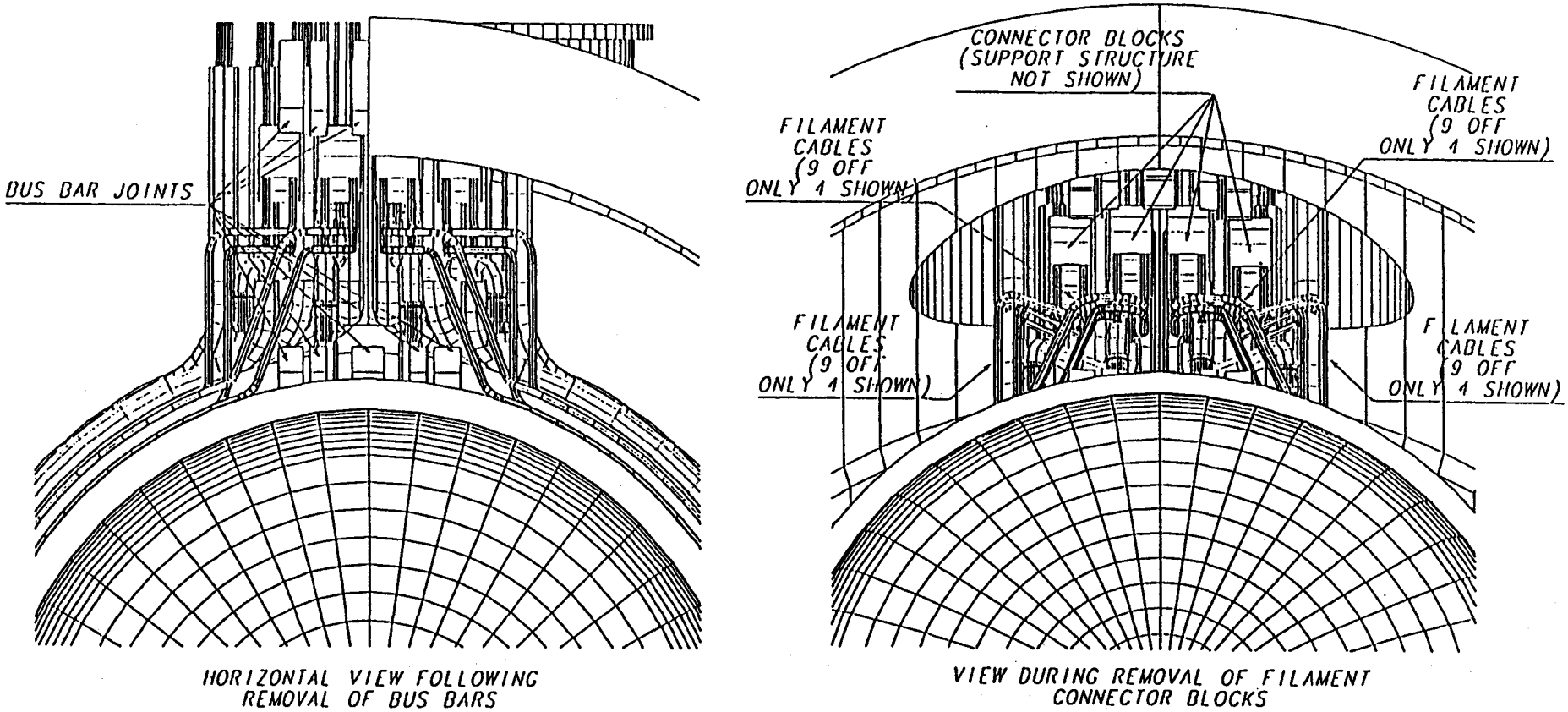

Fig. 3.1-9 Removal of filament feed connection

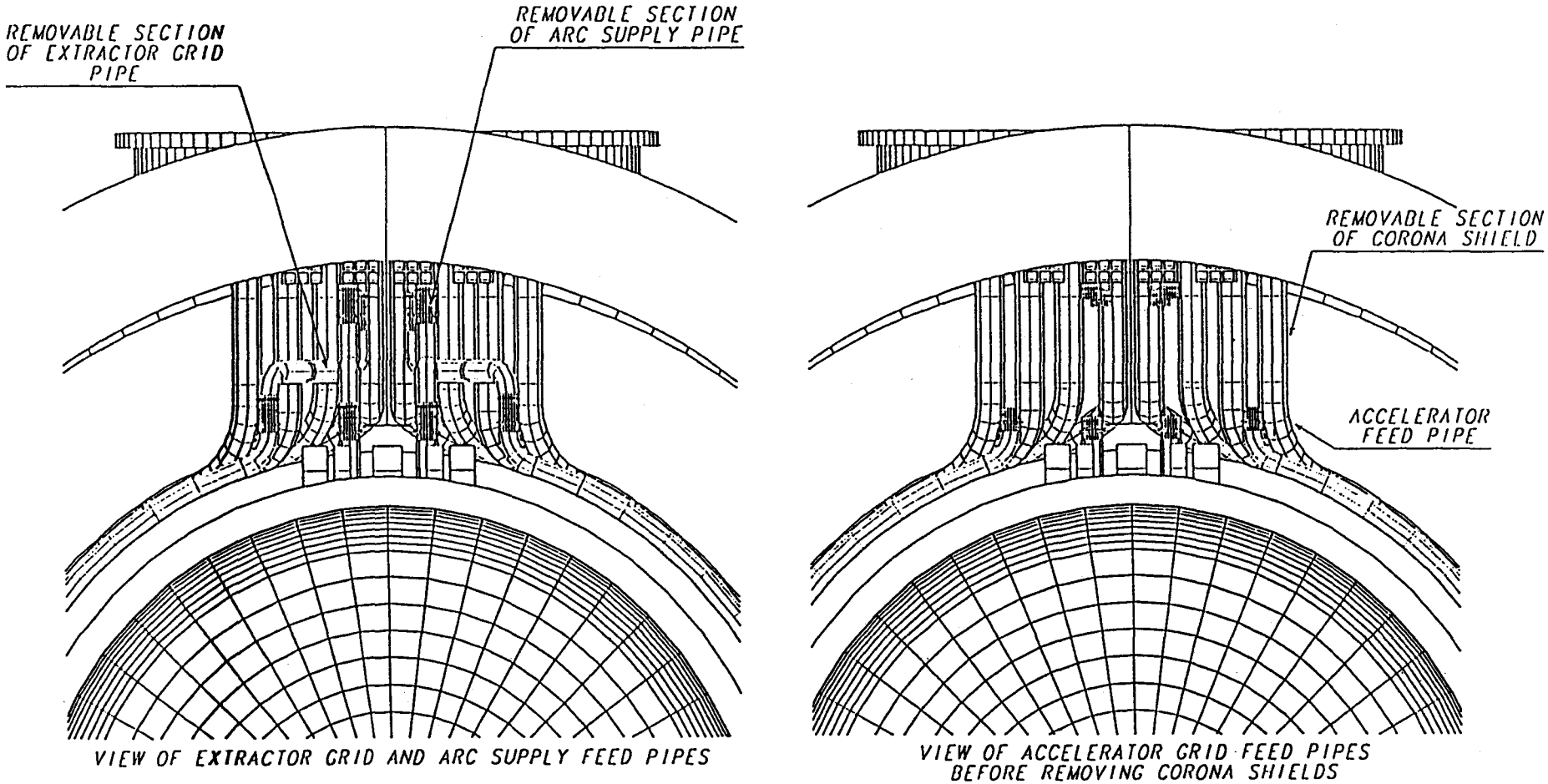

Fig. 3.1-10 Removal of extractor and arc pipes

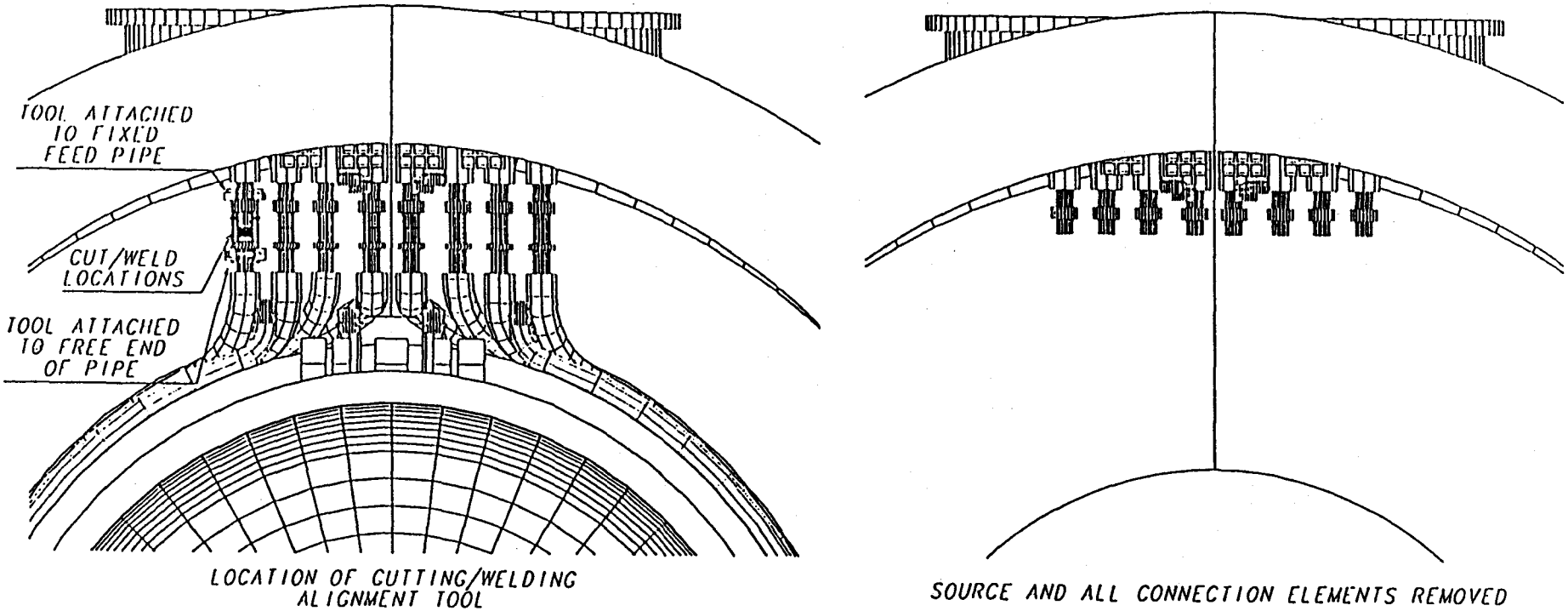

Fig. 3.1-11 Removal of feed pipes

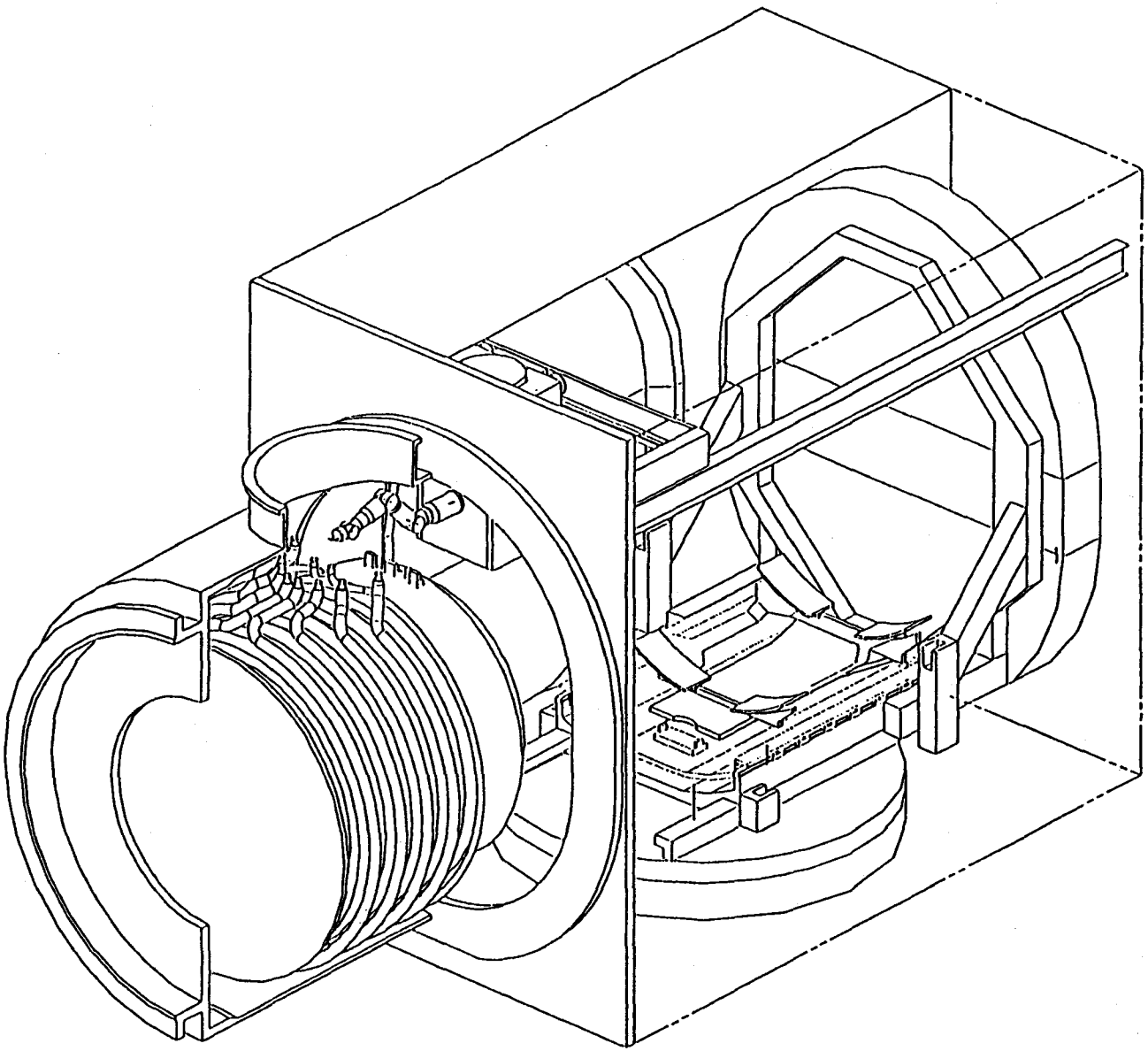

Fig. 3.1-12 3-D view after HV lines removal

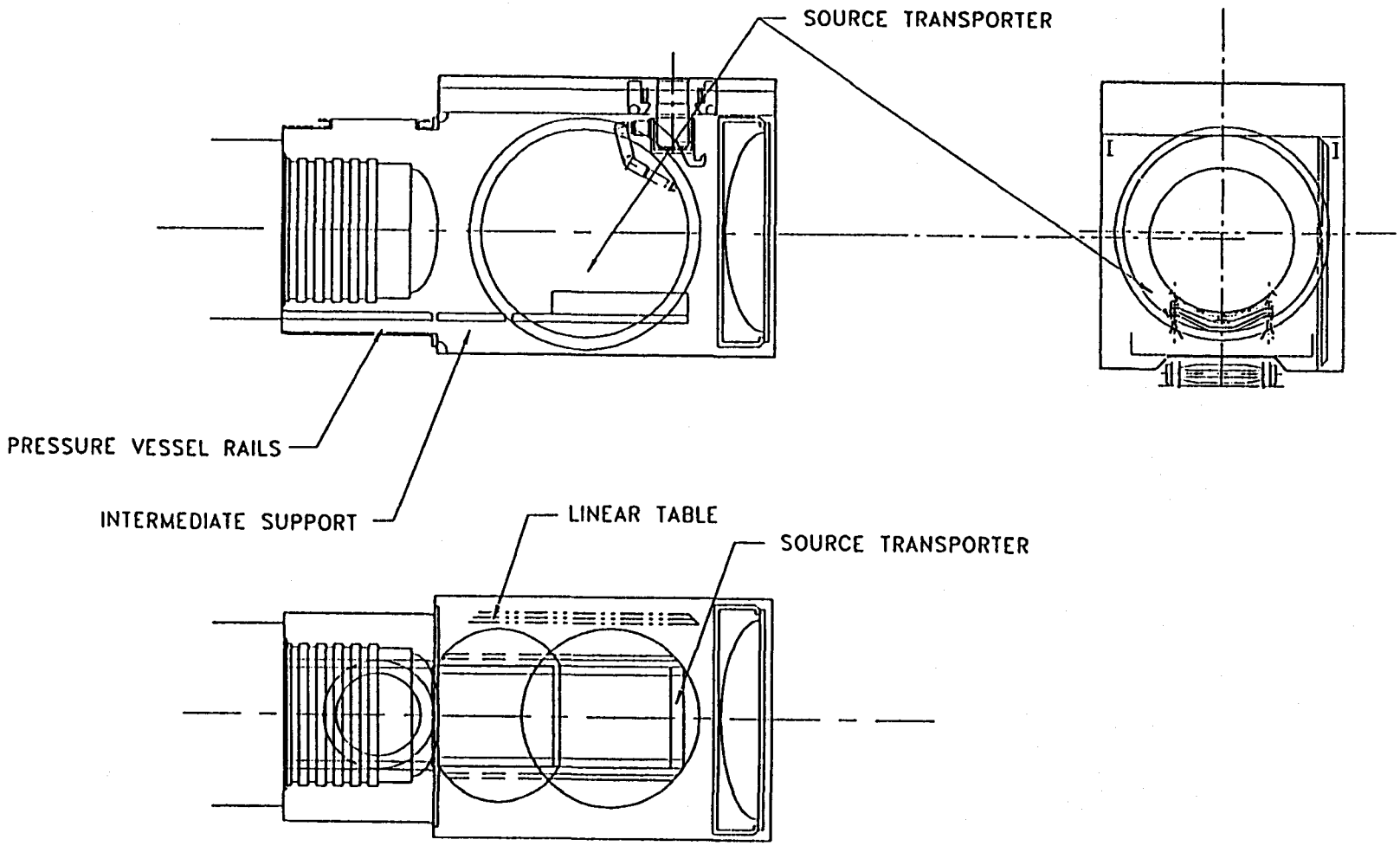

Fig. 3.1-13 Deployment source transporter (install radial rail)

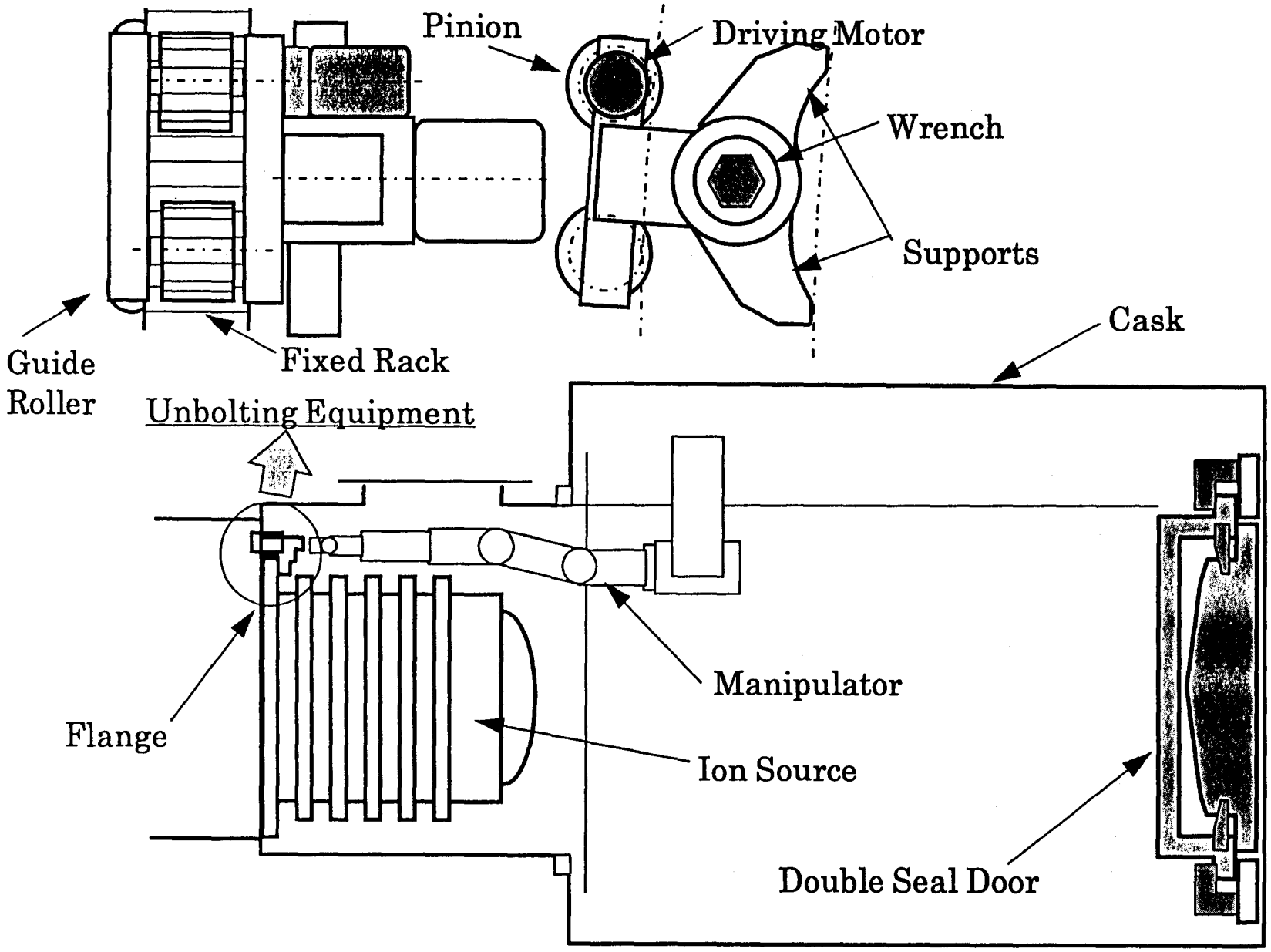

Fig. 3.1-14 Unbolting equipment for flange of ion source

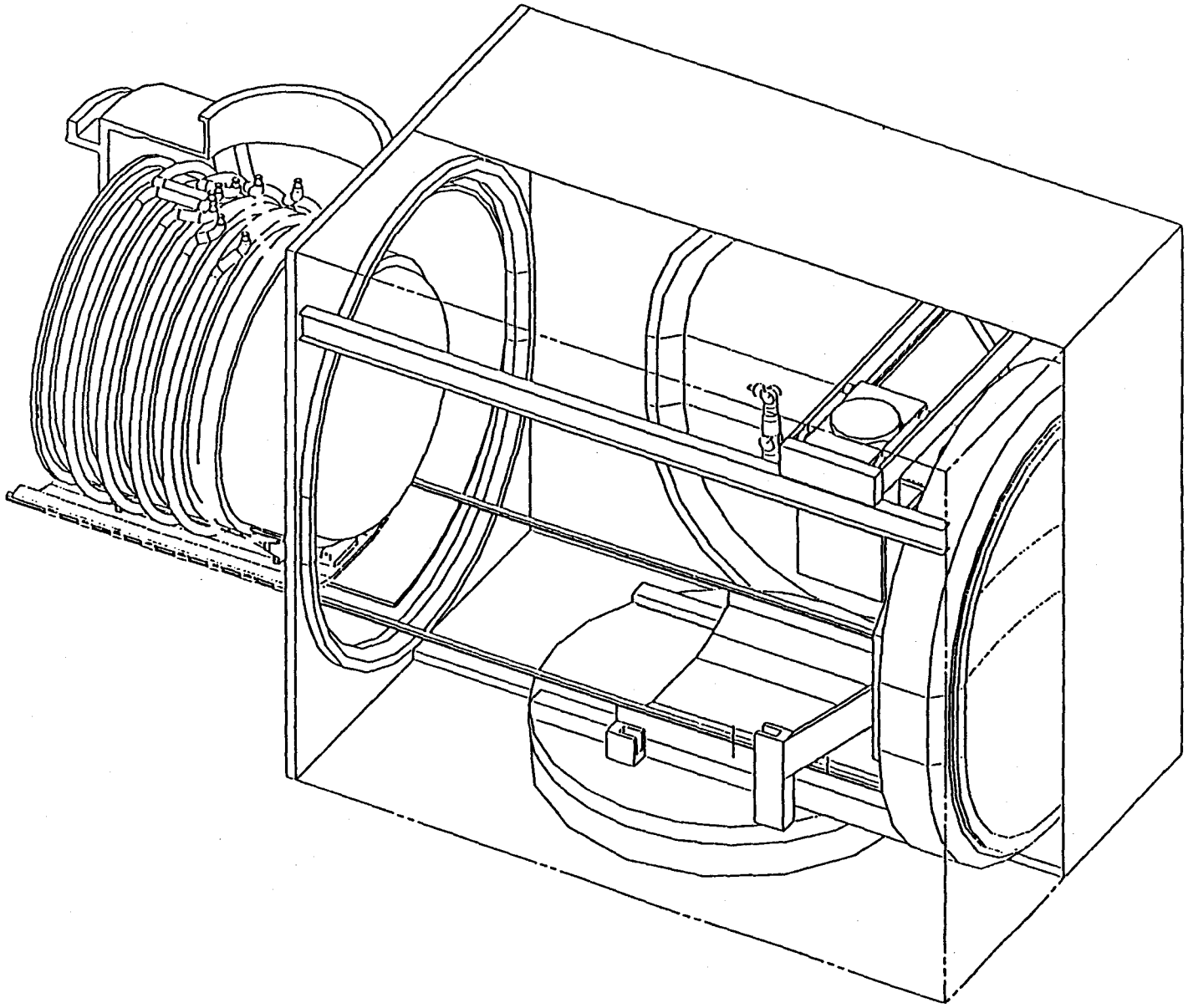

Fig. 3.1-15 Installation of source transporter

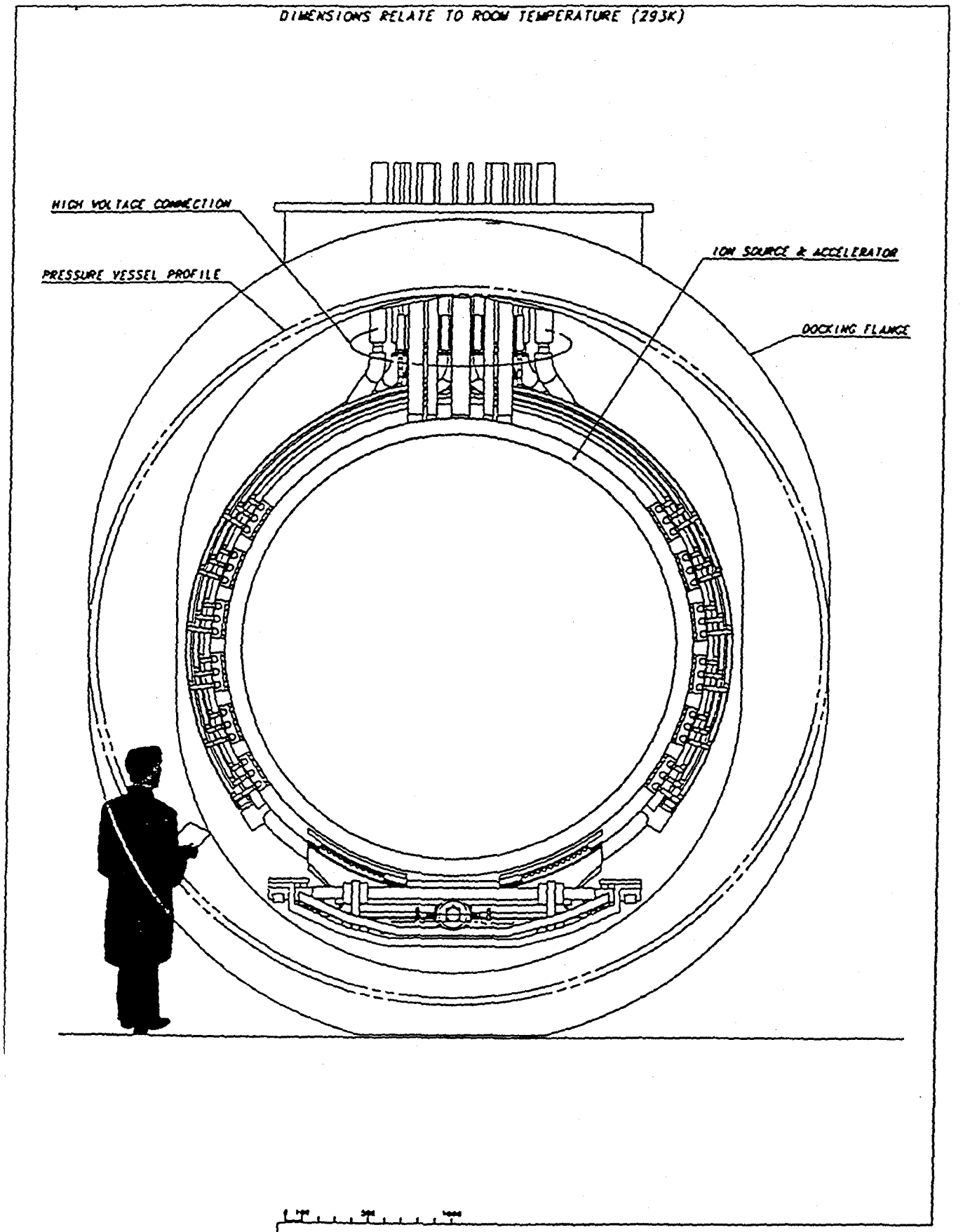

Fig. 3.1-16 Installation space for source transporter

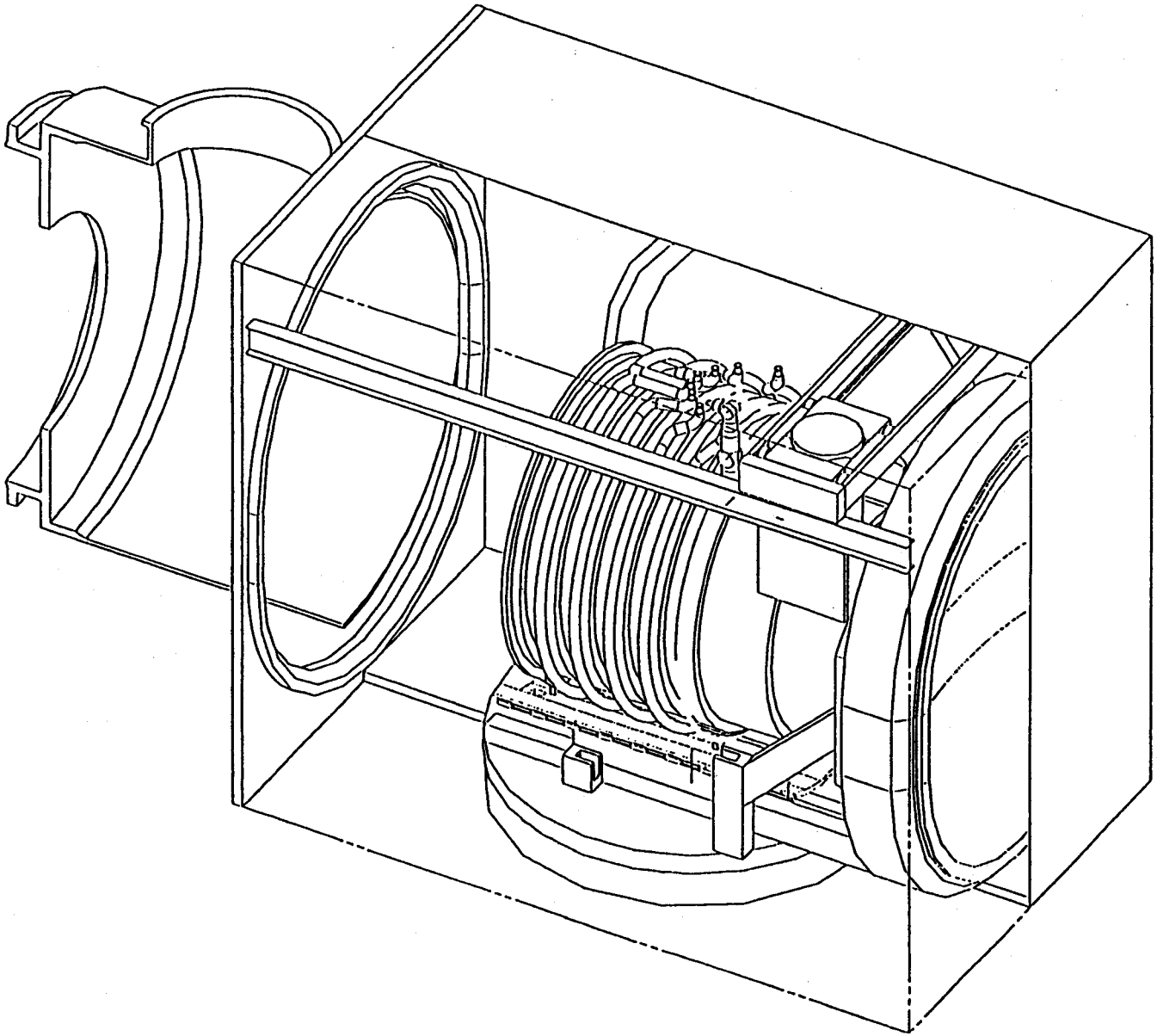

Fig. 3.1-17 Removal of ion source

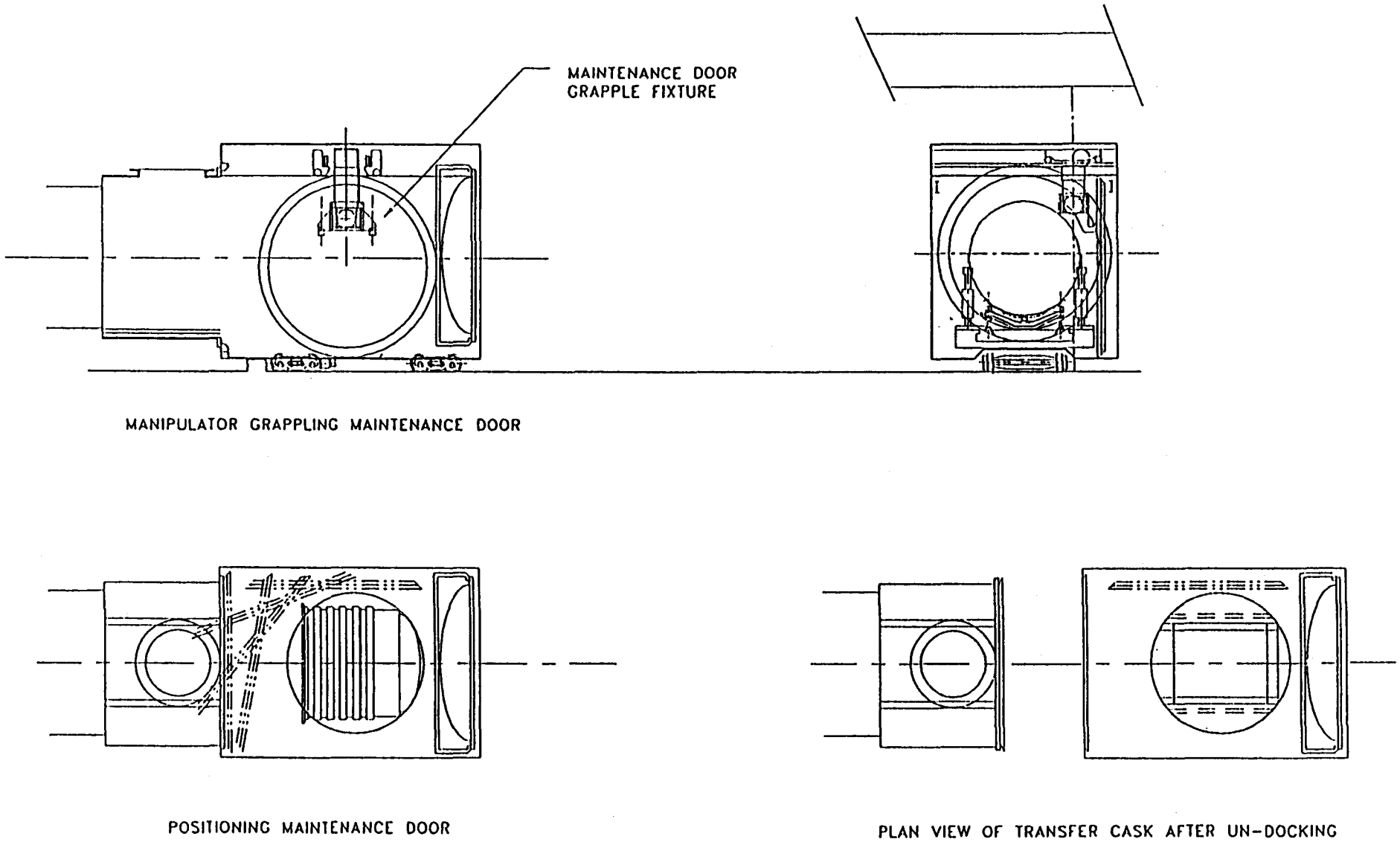

Fig. 3.1-18 Installation and disengagement of maintenance door

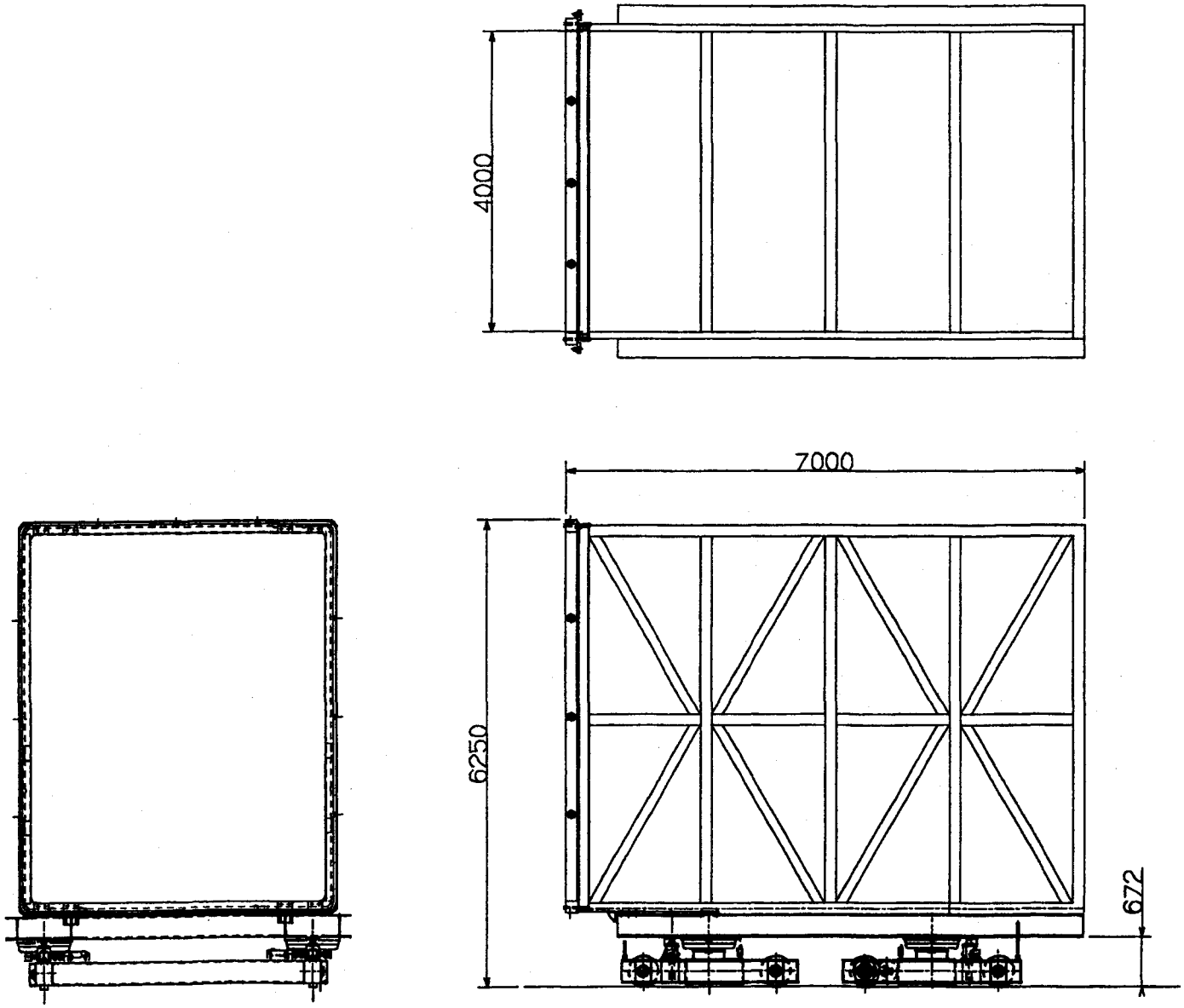

Fig. 3.2-1 Conceptual design of the transfer cask

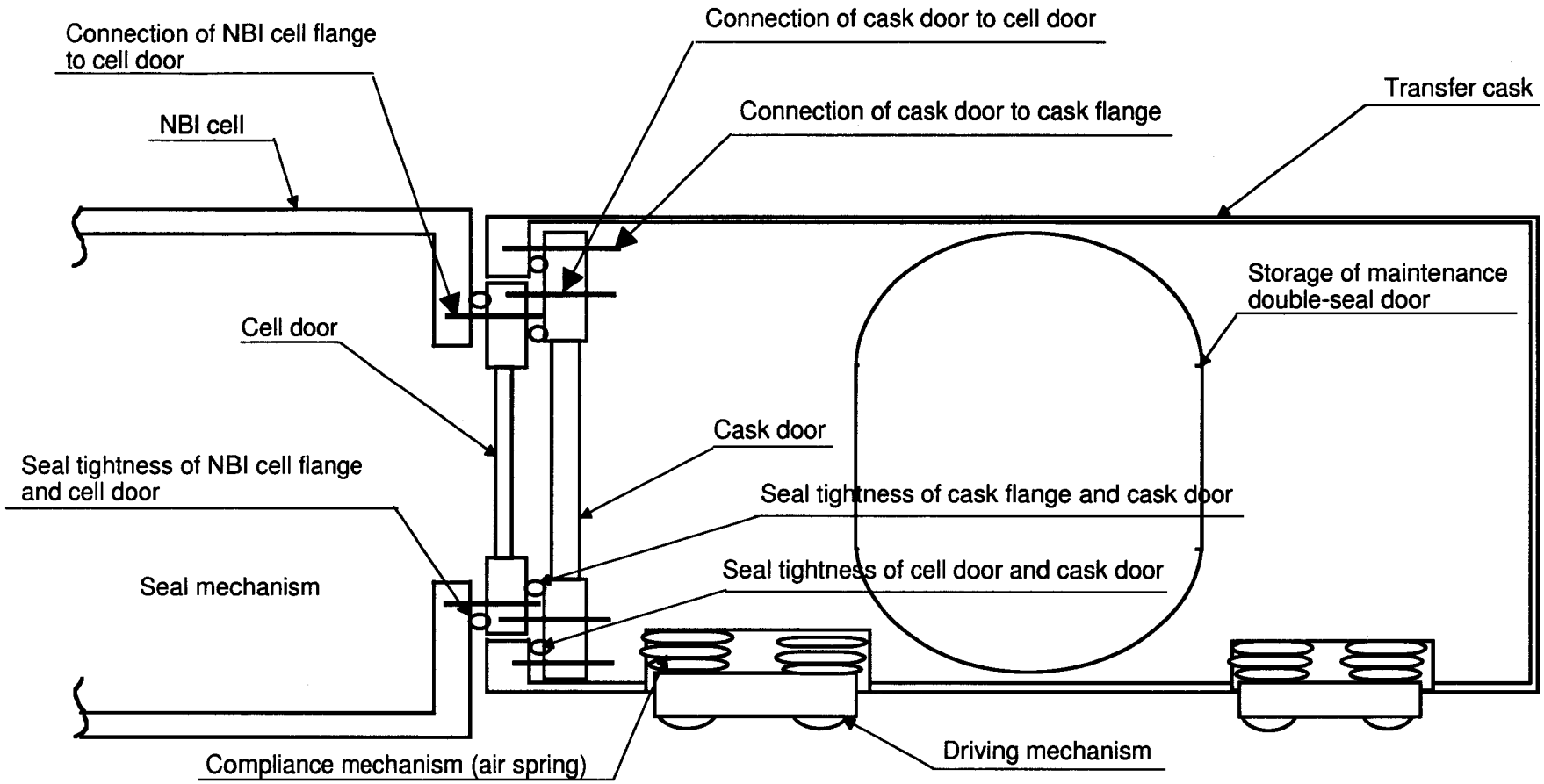

Design subject		
*Connecting mechanism of each doors	→	Bolting, Cotter pin, Clamp,etc. (NBI cell door :Bolting type)
*Seal mechanism of each doors-flanges	→	O-ring by metal or rubber,Inflate seal, etc.
*Specifications of doors	→	No differential pressure limited operation space

Fig. 3.2-2 Conceptual design of the double seal door

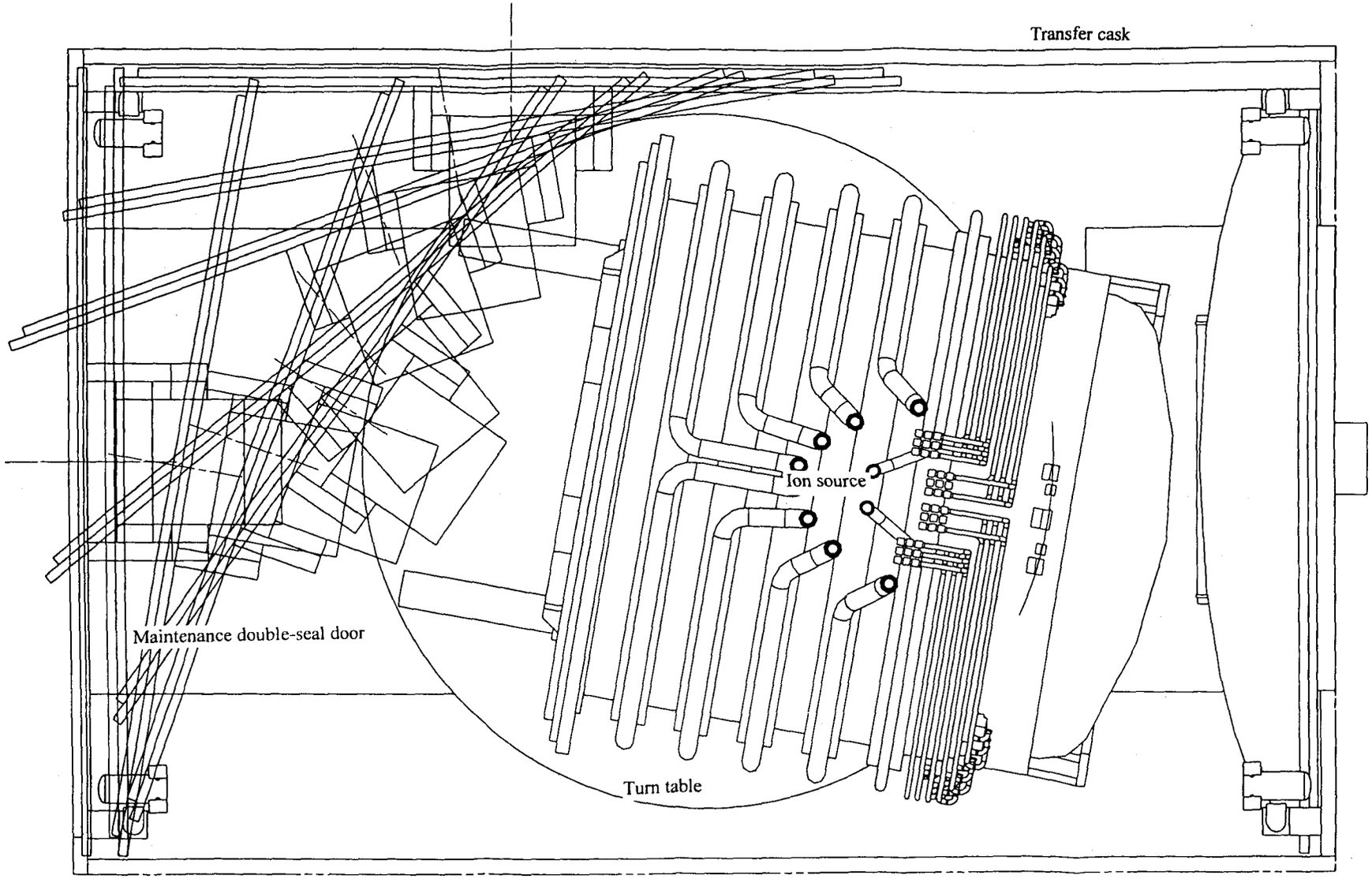

Fig. 3.2-3 Double seal door's locus without interference

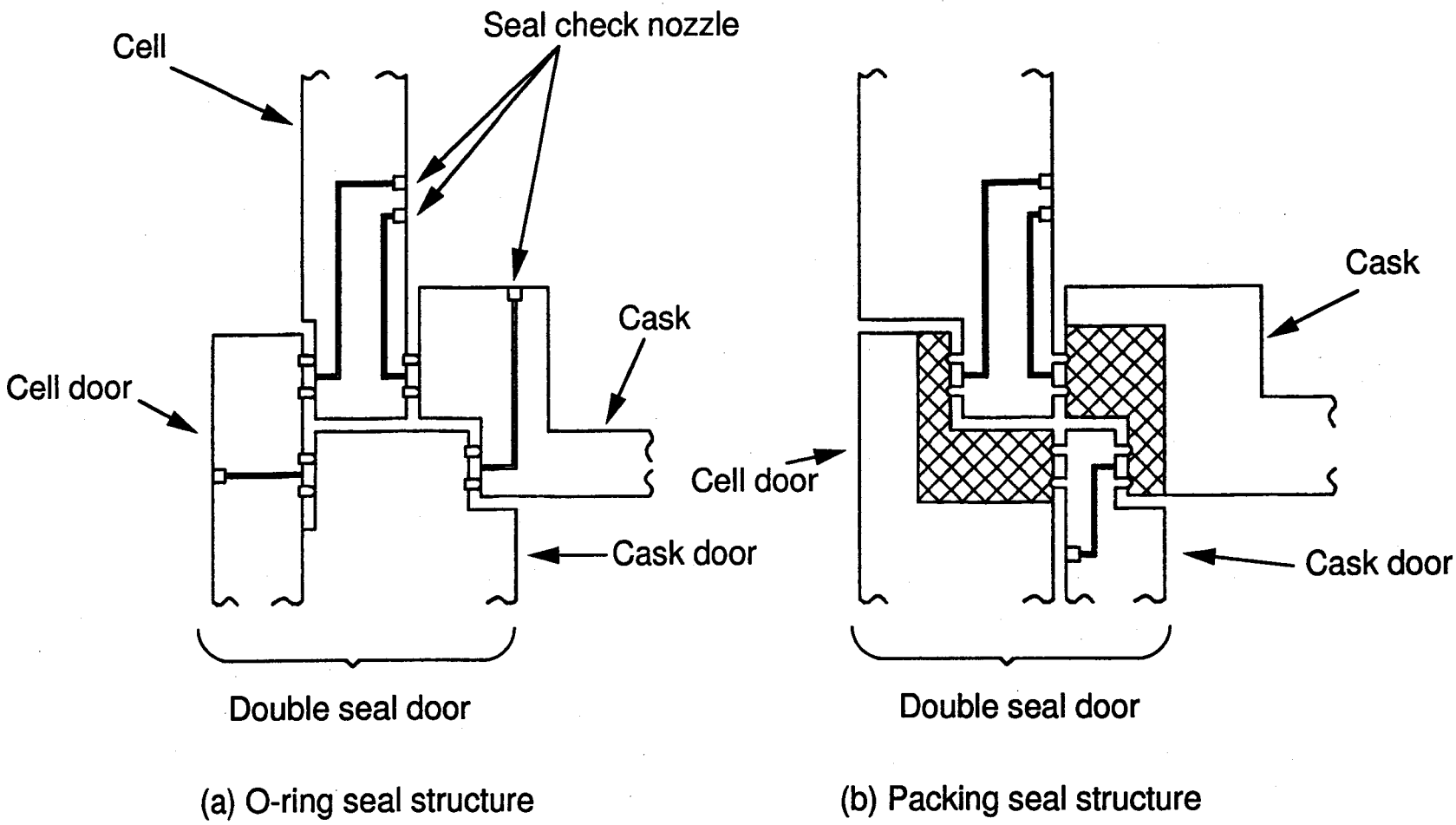

Fig. 3.2-4 Seal methods with the leakage detection mechanism

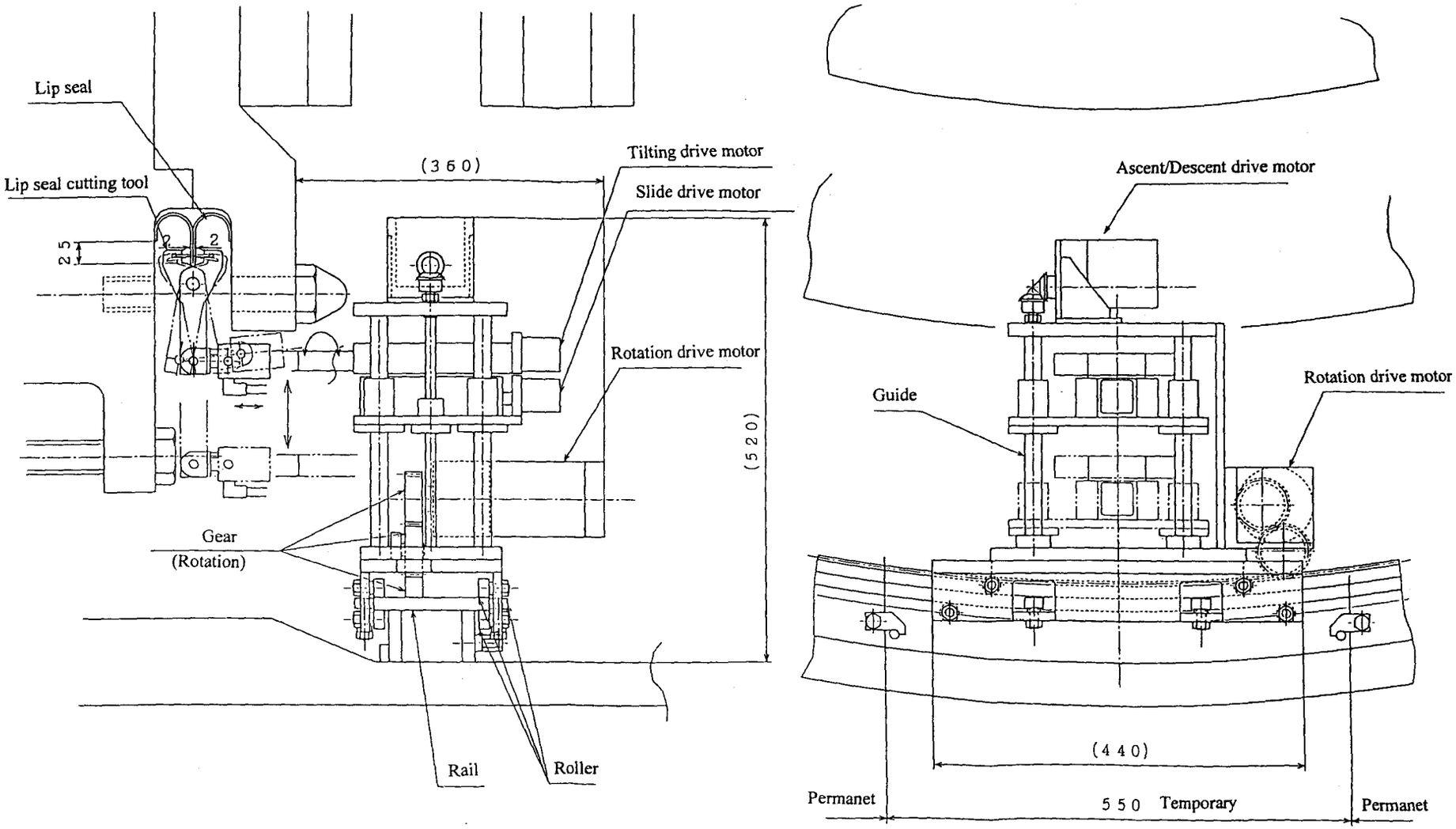

Fig. 3.2-5 Conceptual desgin of the shear type lip seal cutting tool

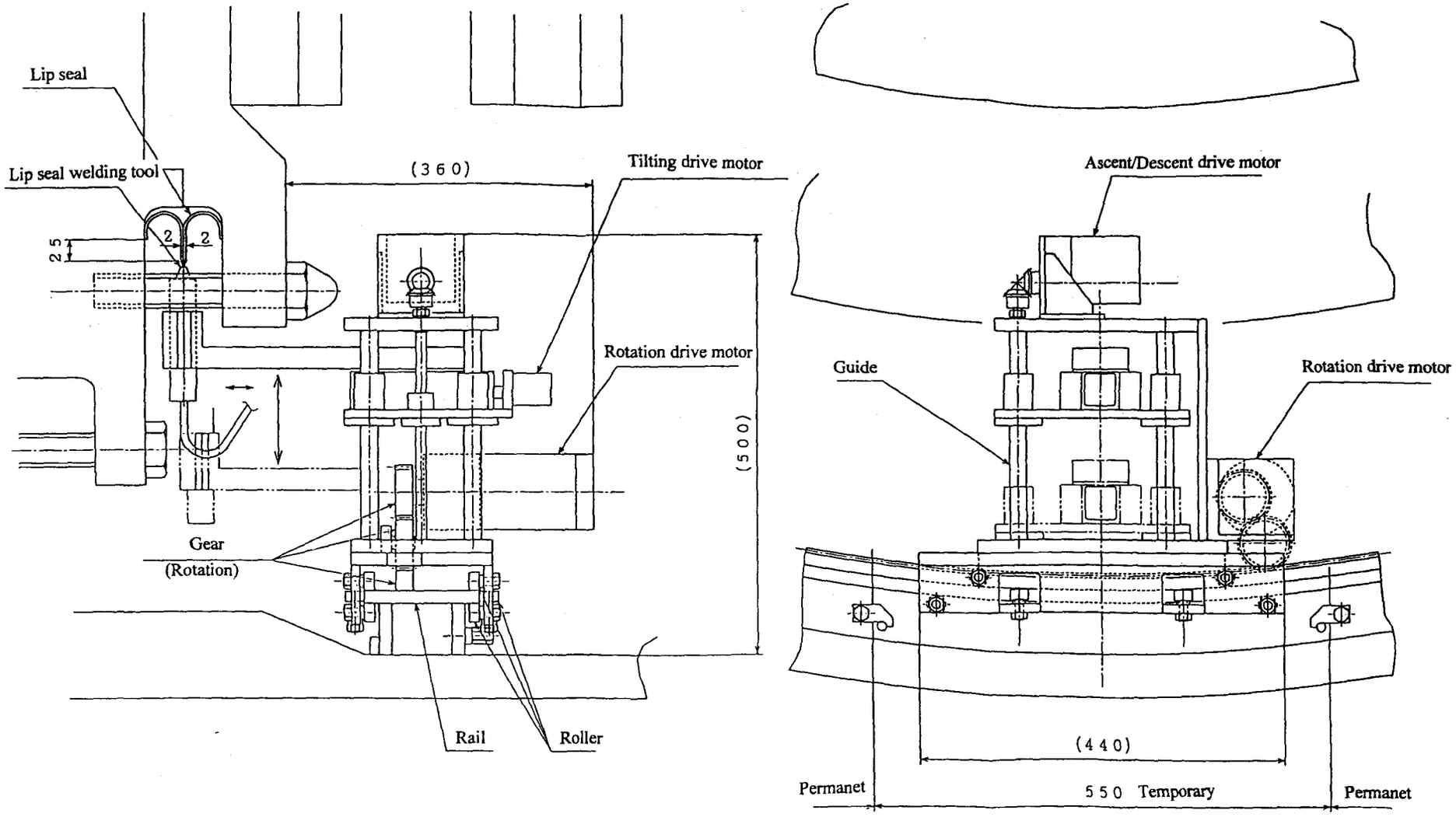

Fig. 3.2-6 Conceptual design of the lip seal welding tool

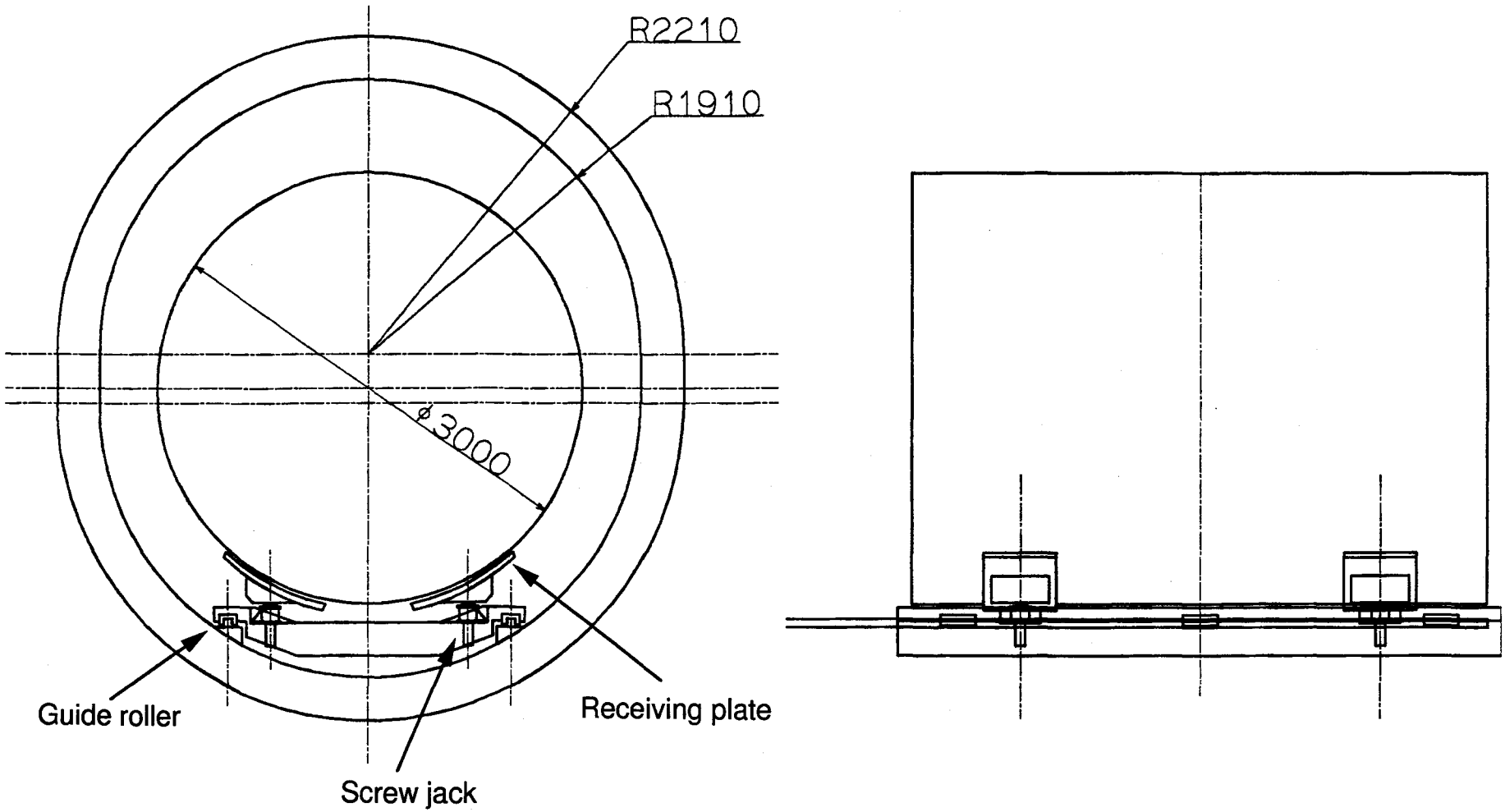

Fig. 3.2-7 Support mechanism for the ion source : case 1

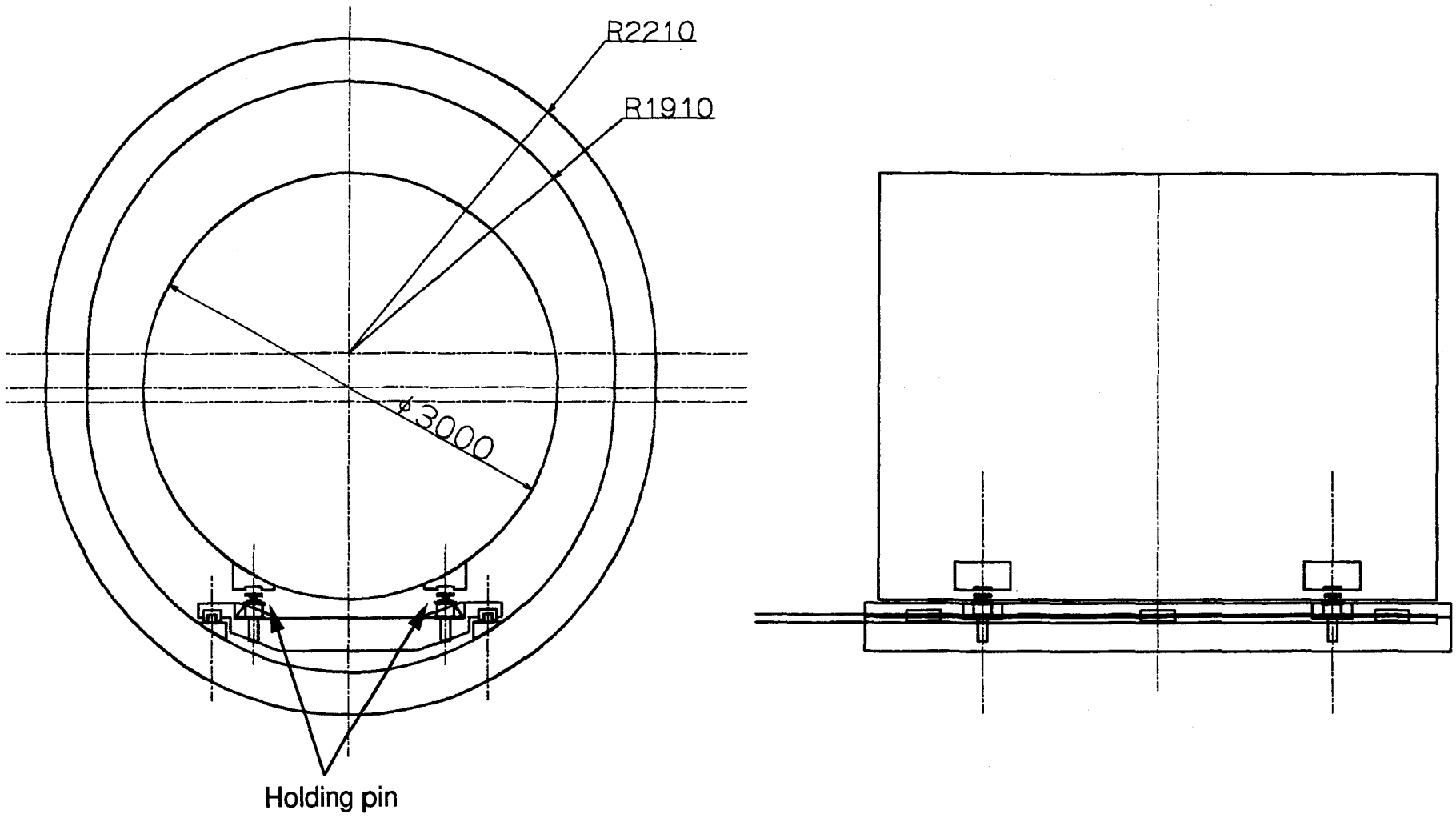

Fig. 3.2-8 Support mechanism for the ion source : case 2

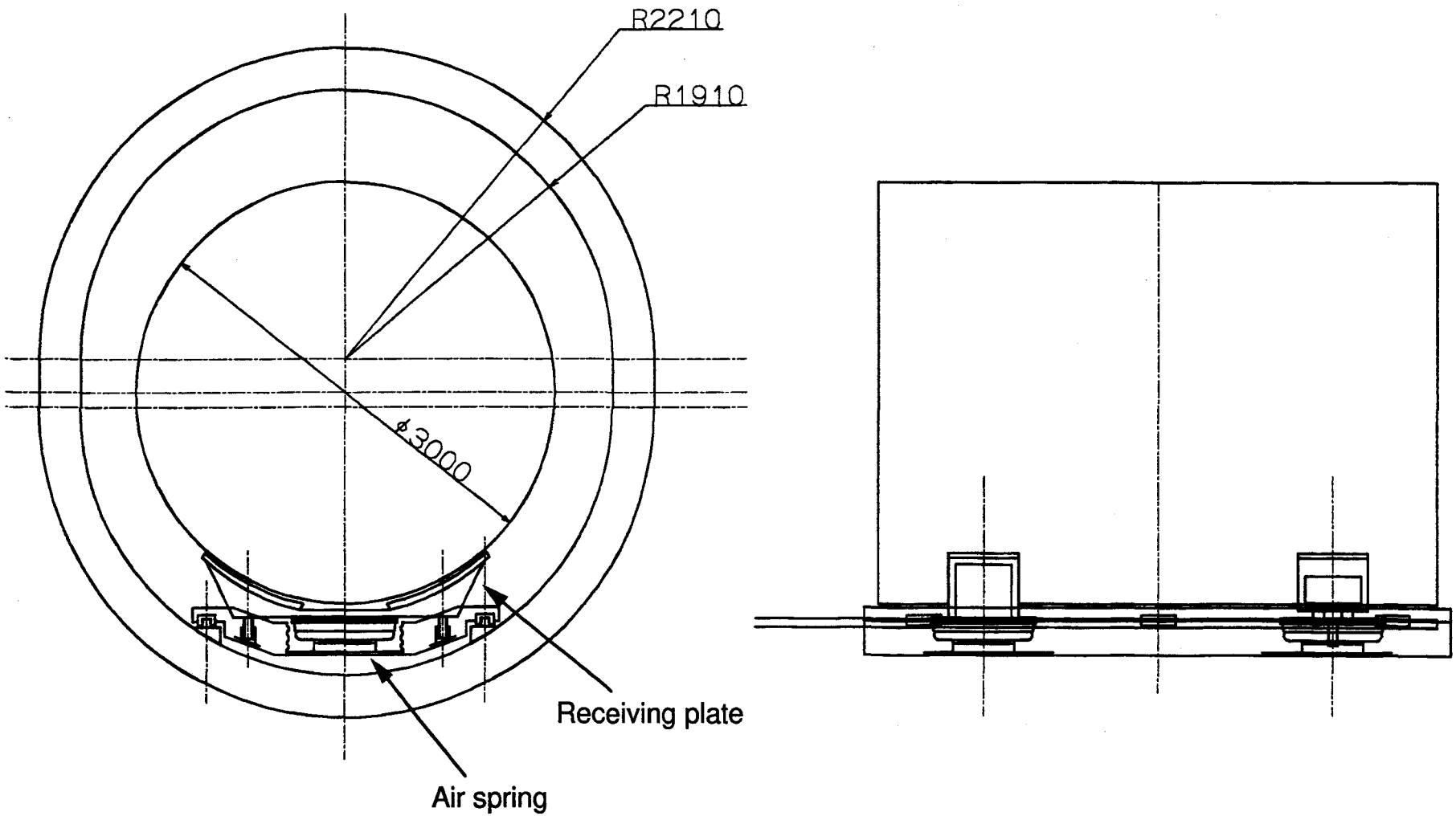

Fig. 3.2-9 Support mechanism for the ion source : case 3

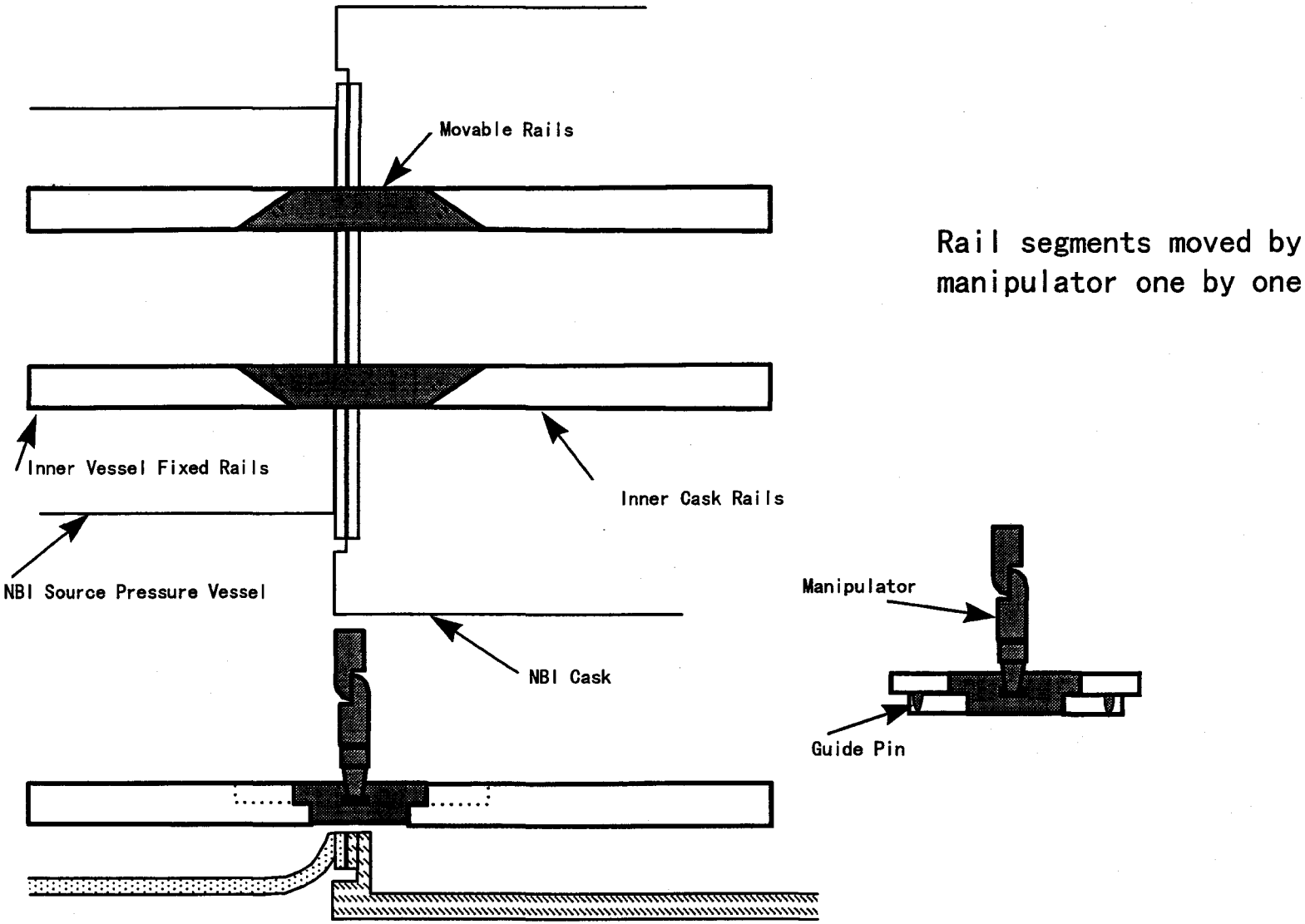

Fig. 3.2-10 Rail connection method : manipulator handling type

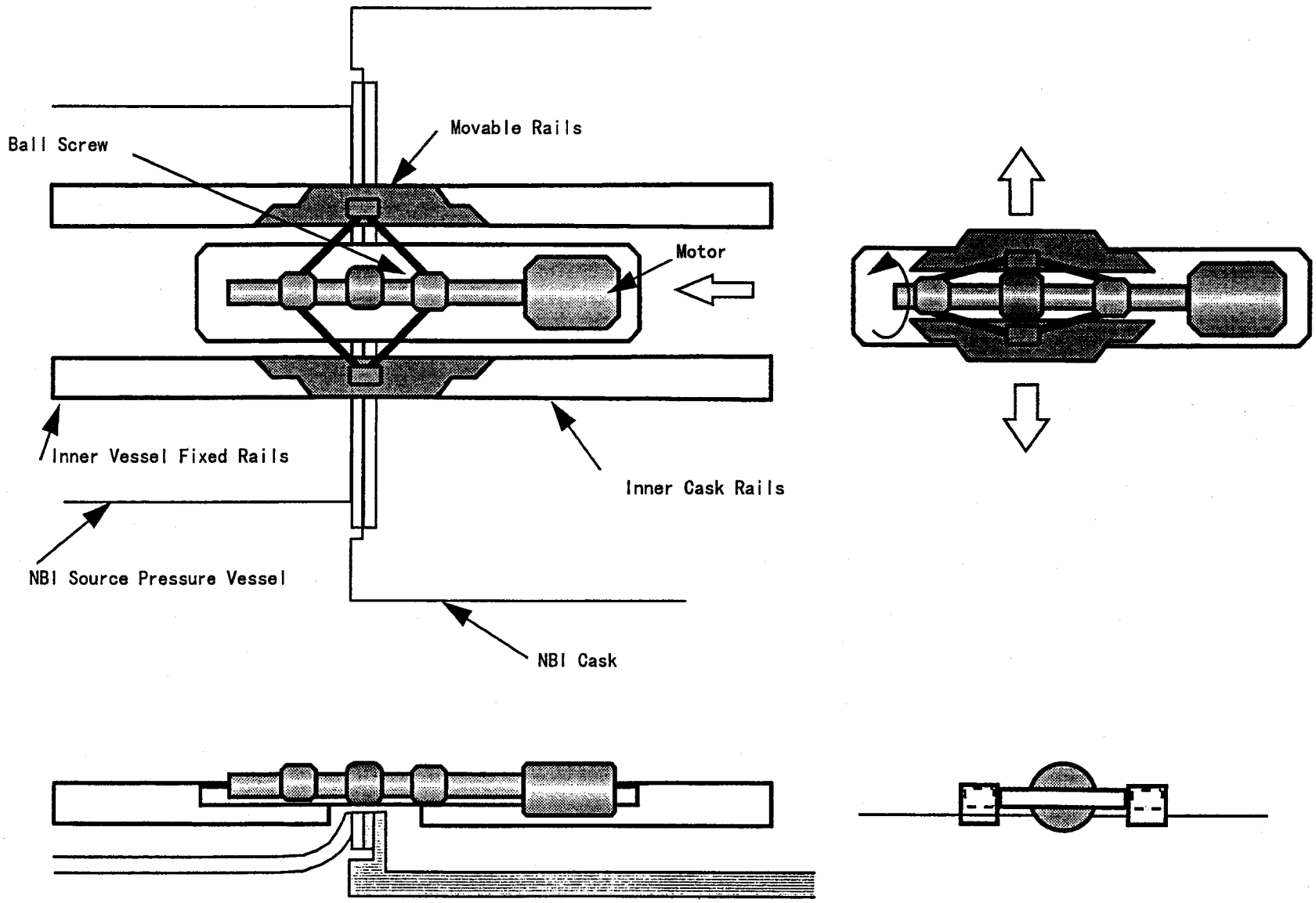

Fig. 3.2-11 Rail connection method : pantograph type

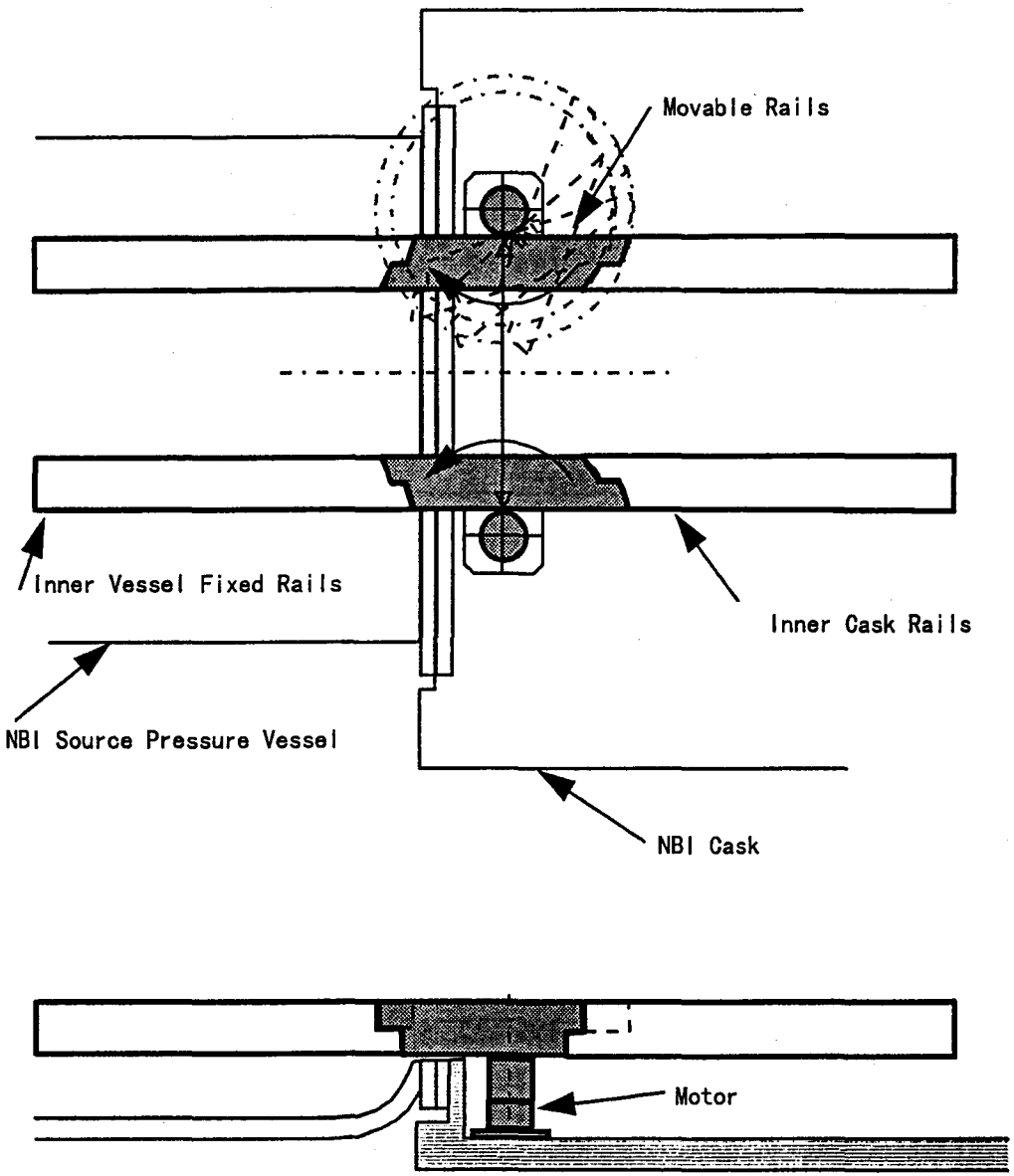

Fig. 3.2-12 Rail connection method : rotation type

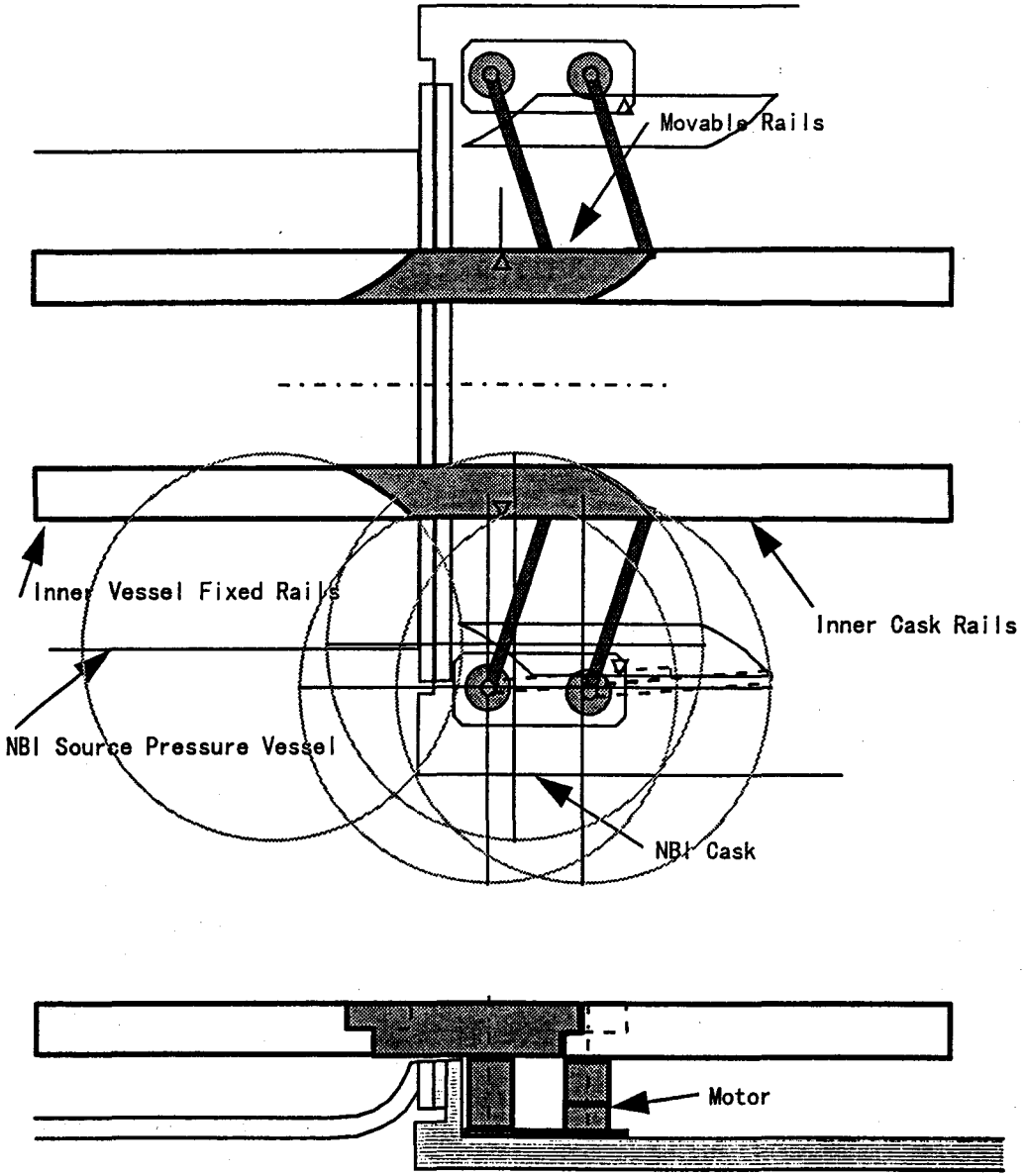

Fig. 3.2-13 Rail connection method : parallel link type

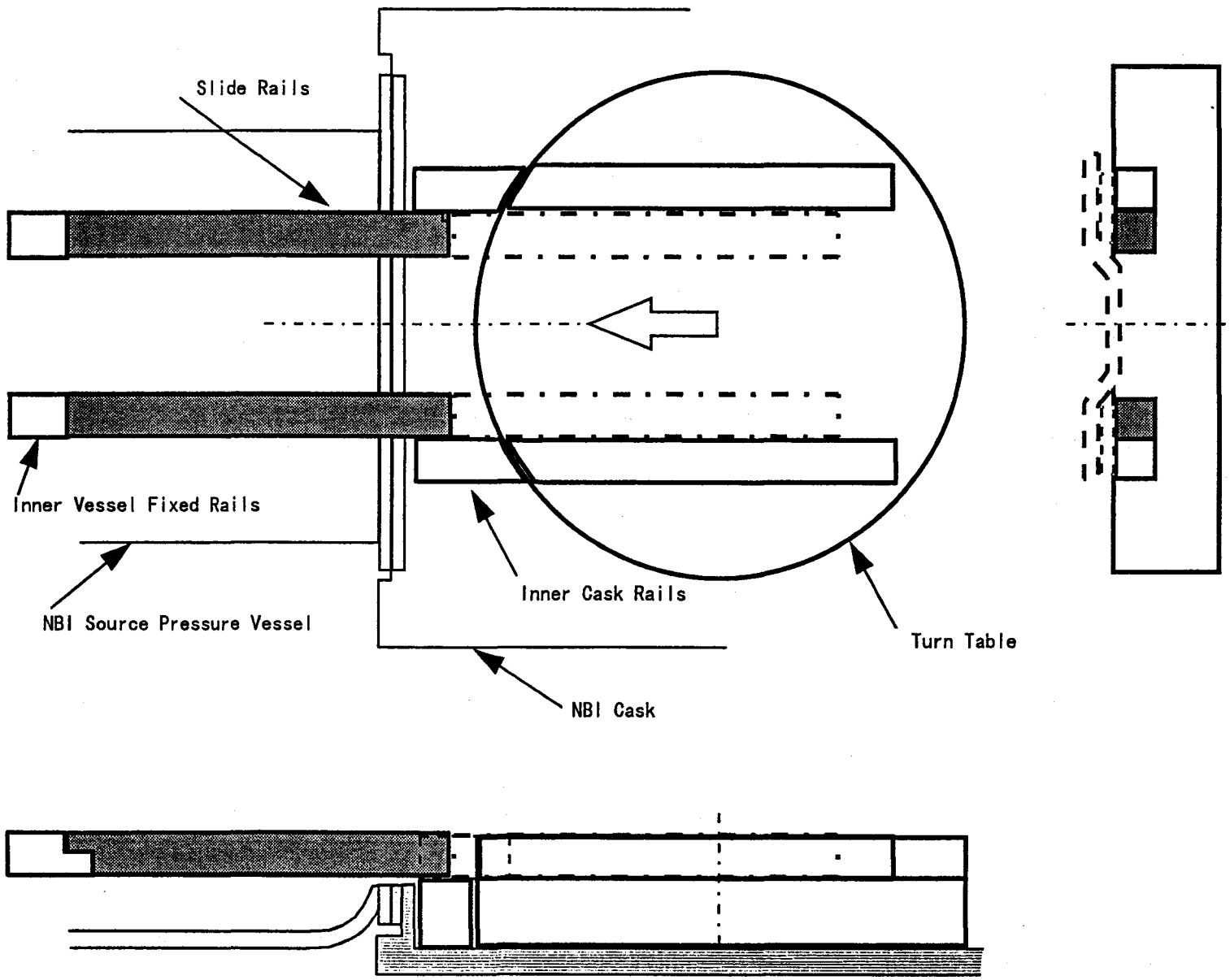

Fig. 3.2-14 Rail connection method : rail slide type

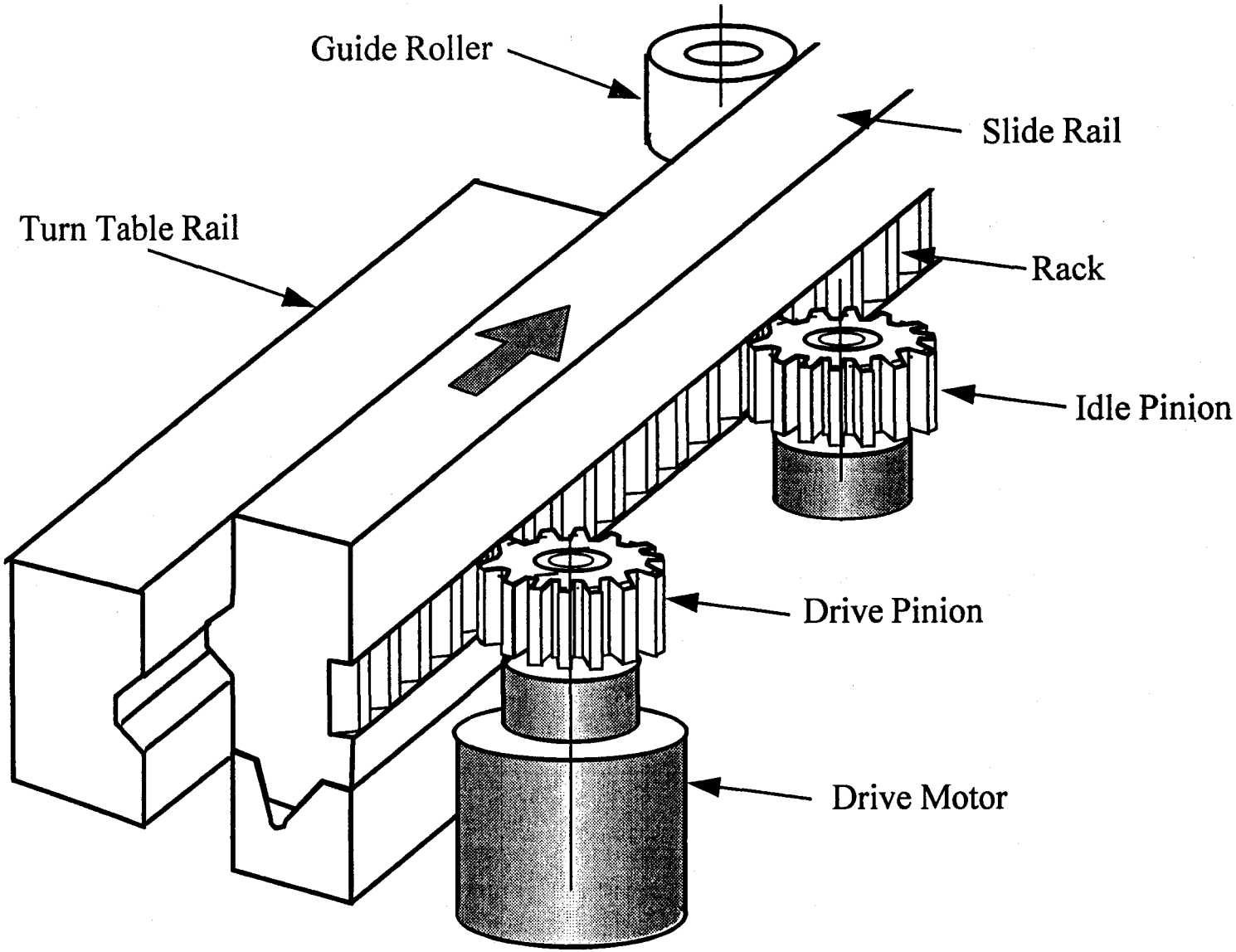

Fig. 3.2-15 Structure of the rail slide mechanism

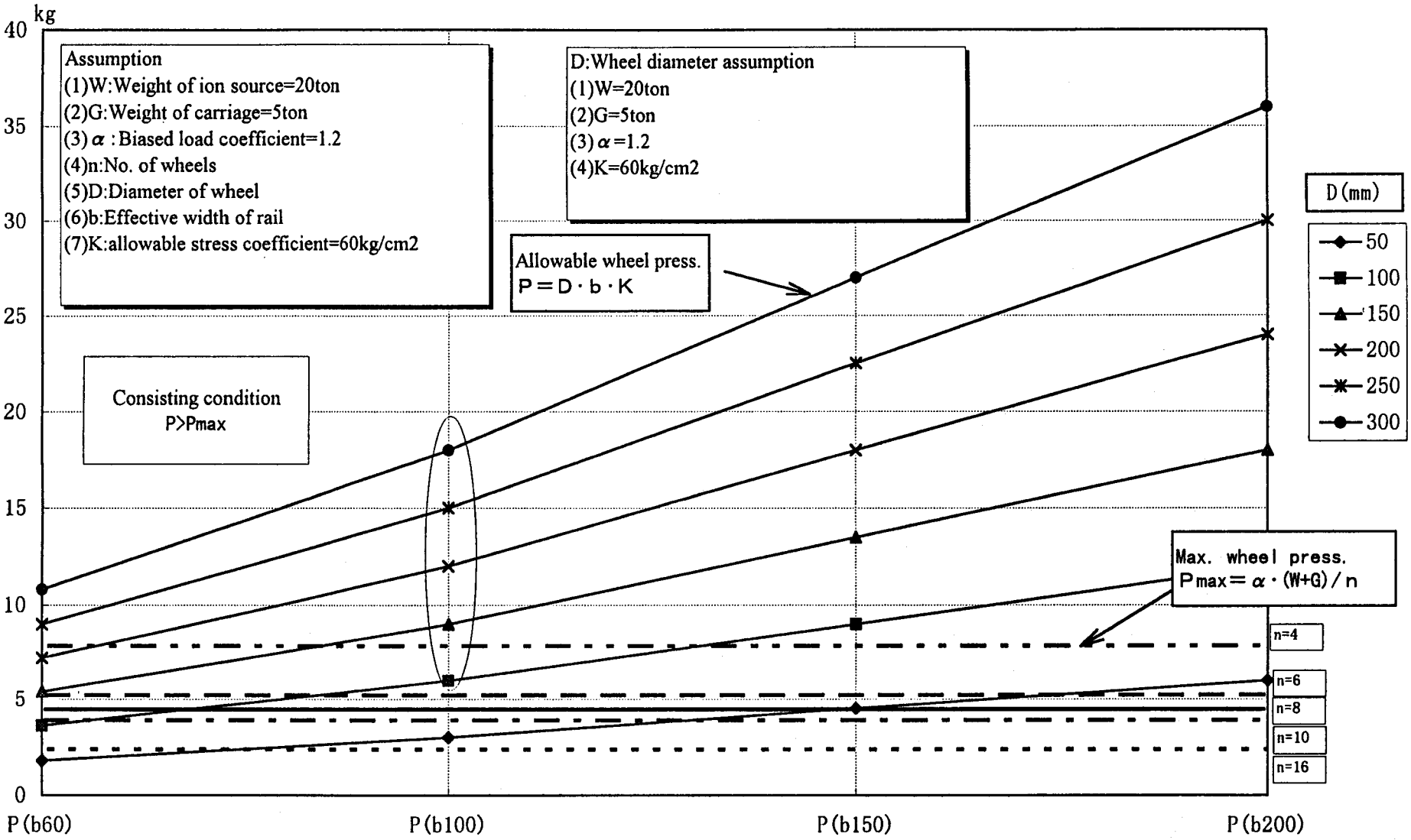

Fig. 3.2-16 Relationship of the maximum wheel pressure to the allowable wheel pressure

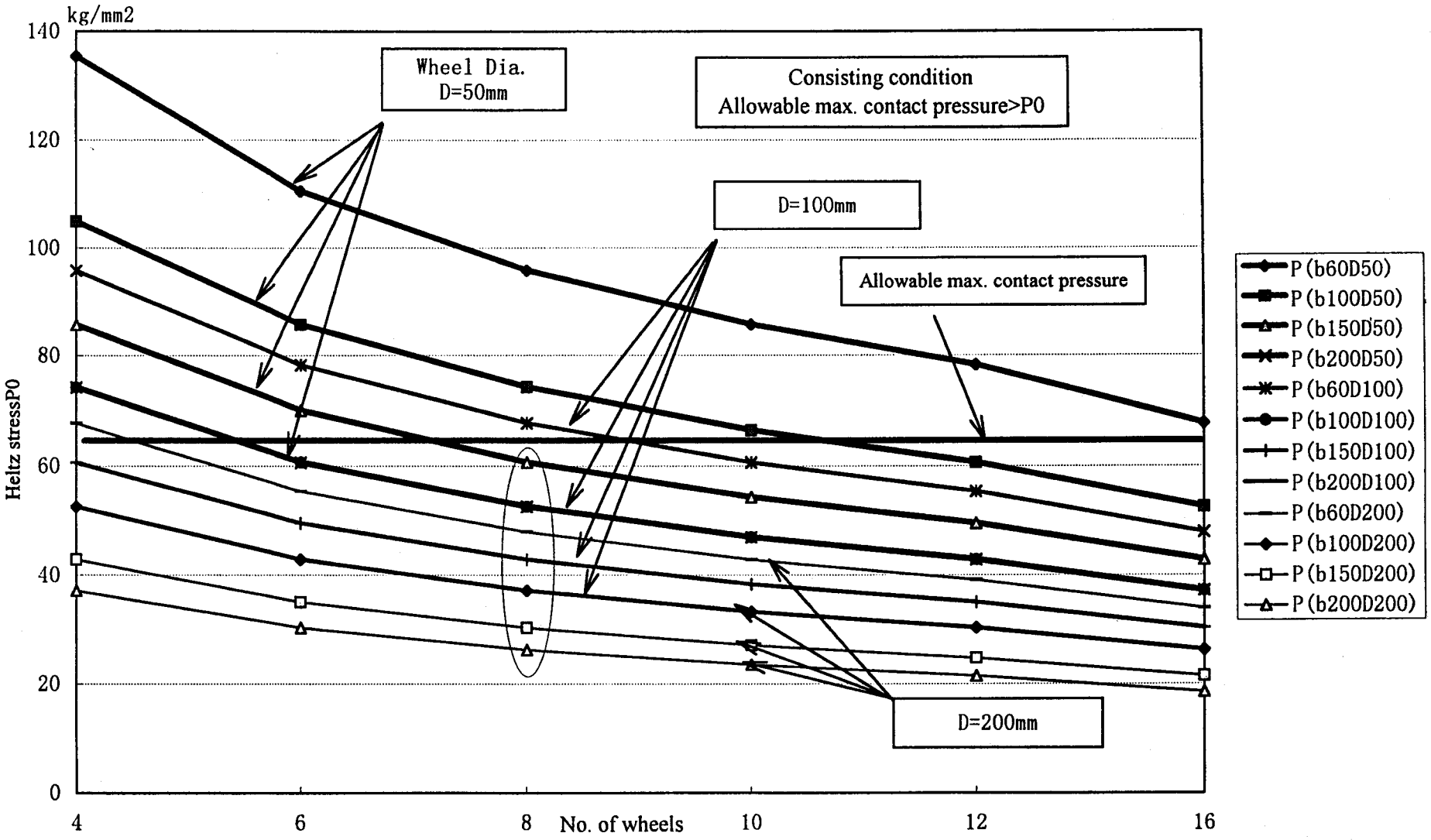

Fig. 3.2-17 Relationship of the number of wheels to the Heltz stress on the rail surface

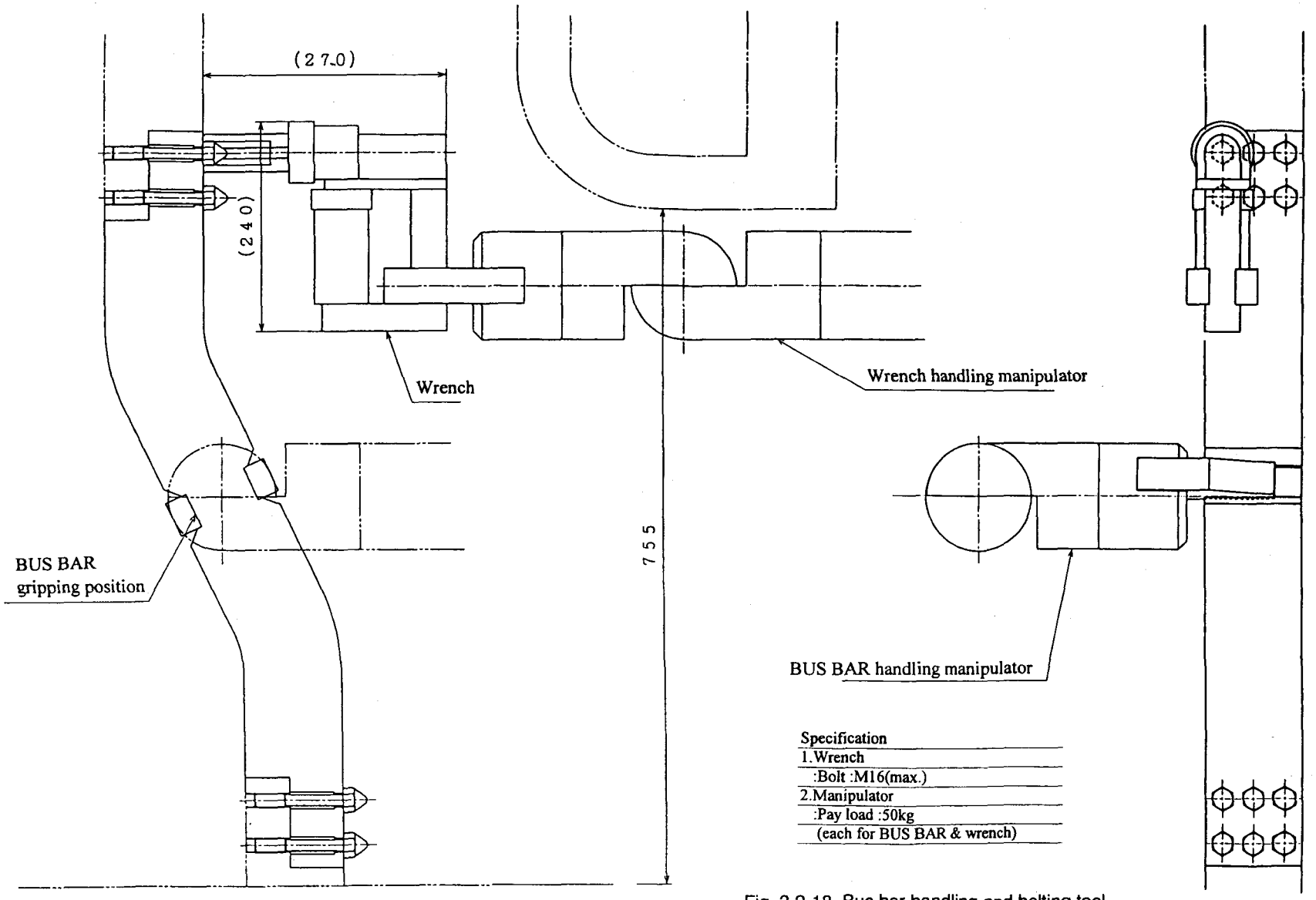

Fig. 3.2-18 Bus bar handling and bolting tool

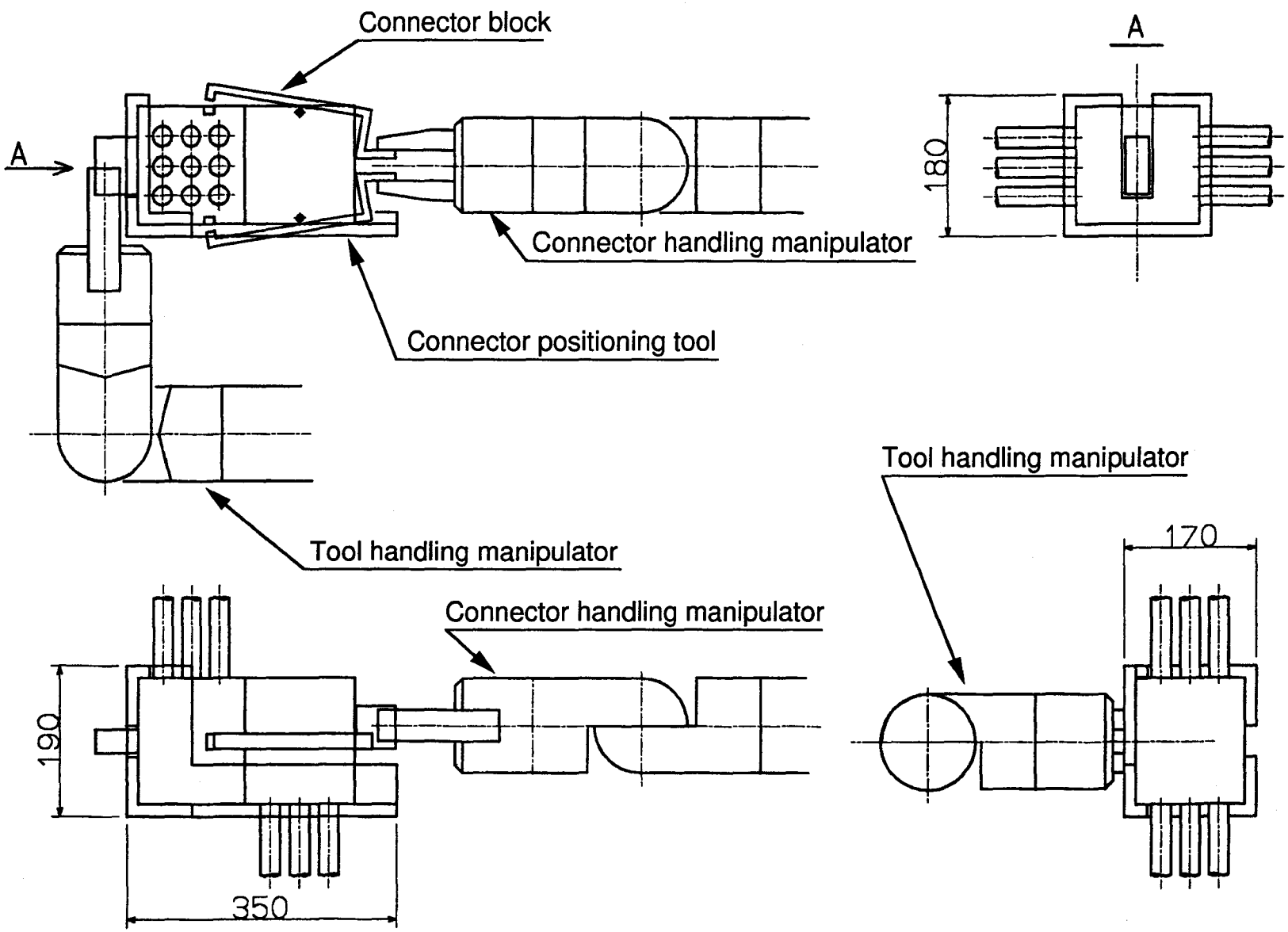

Fig. 3.2-19 Filament connector handling tool

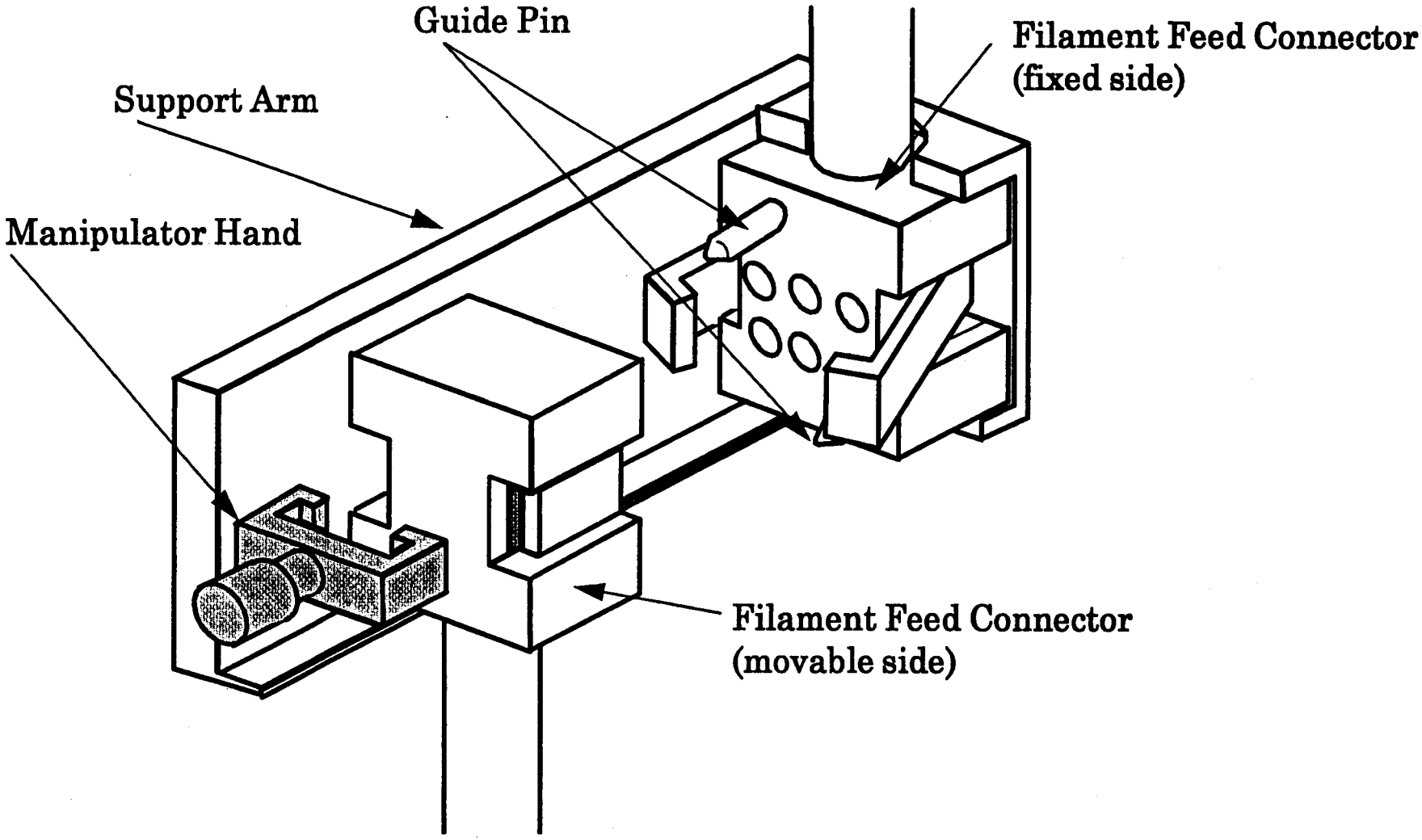

Fig. 3.2-20 Main and support manipulators for filament connectors

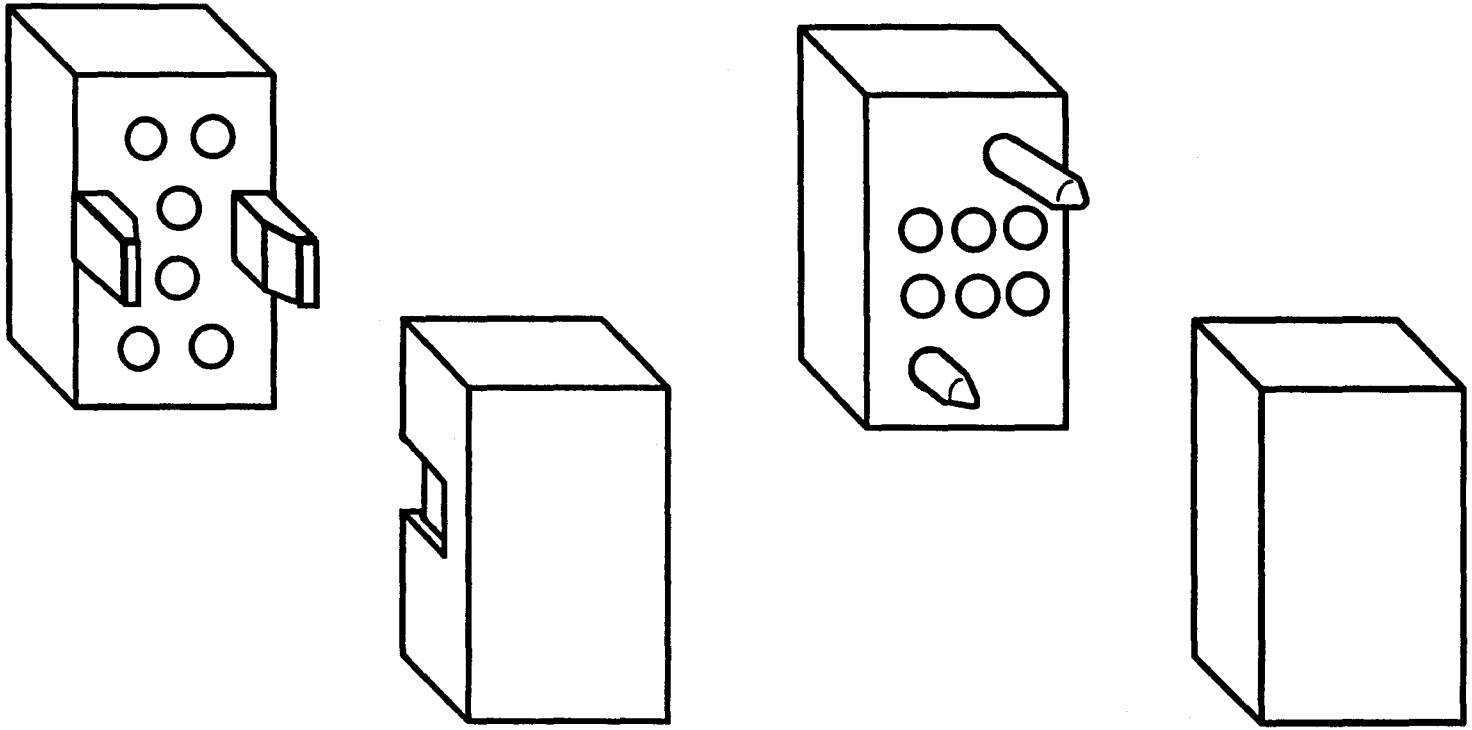

Fig. 3.2-21 Schematic view of the connector block

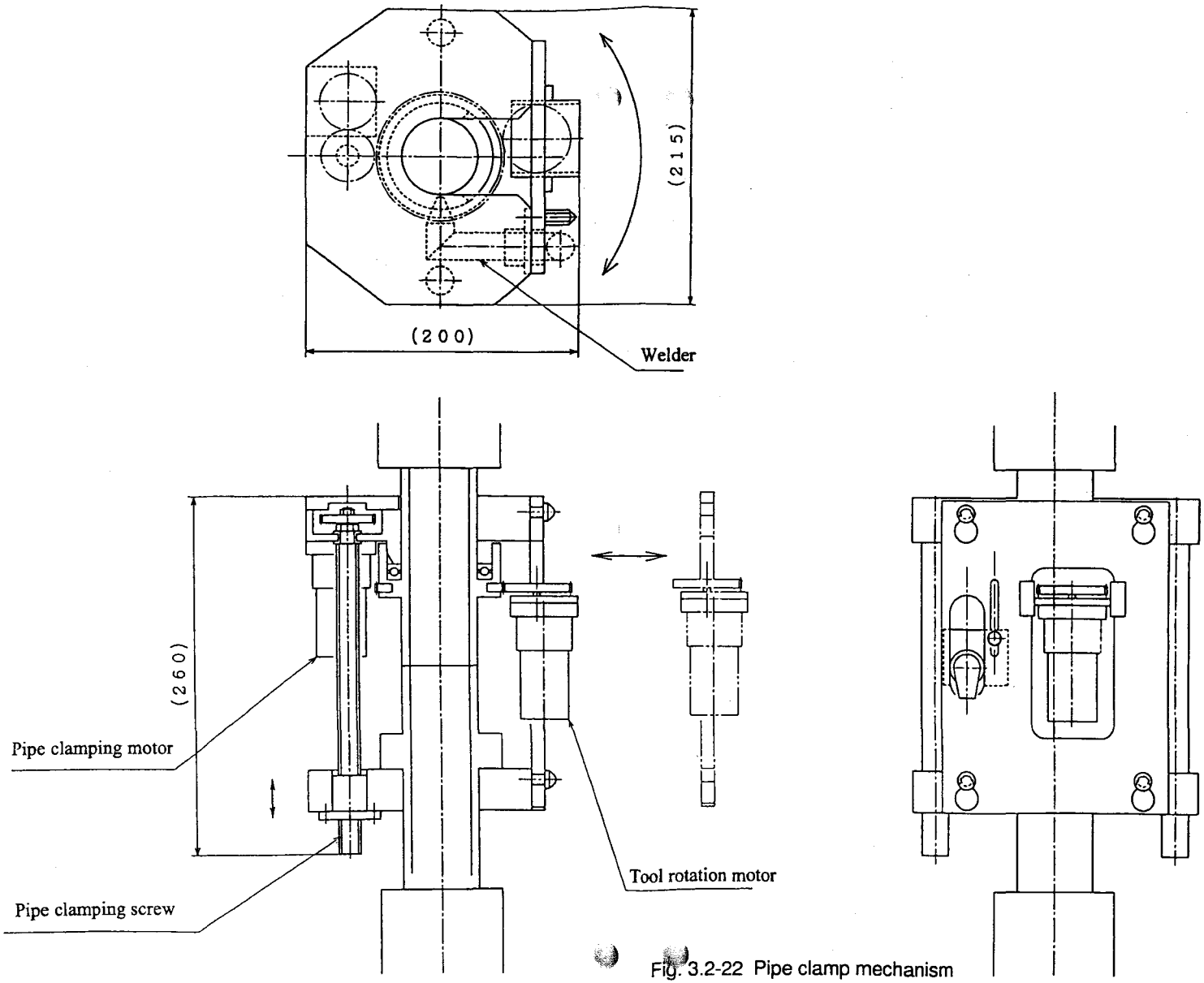

Fig. 3.2-22 Pipe clamp mechanism

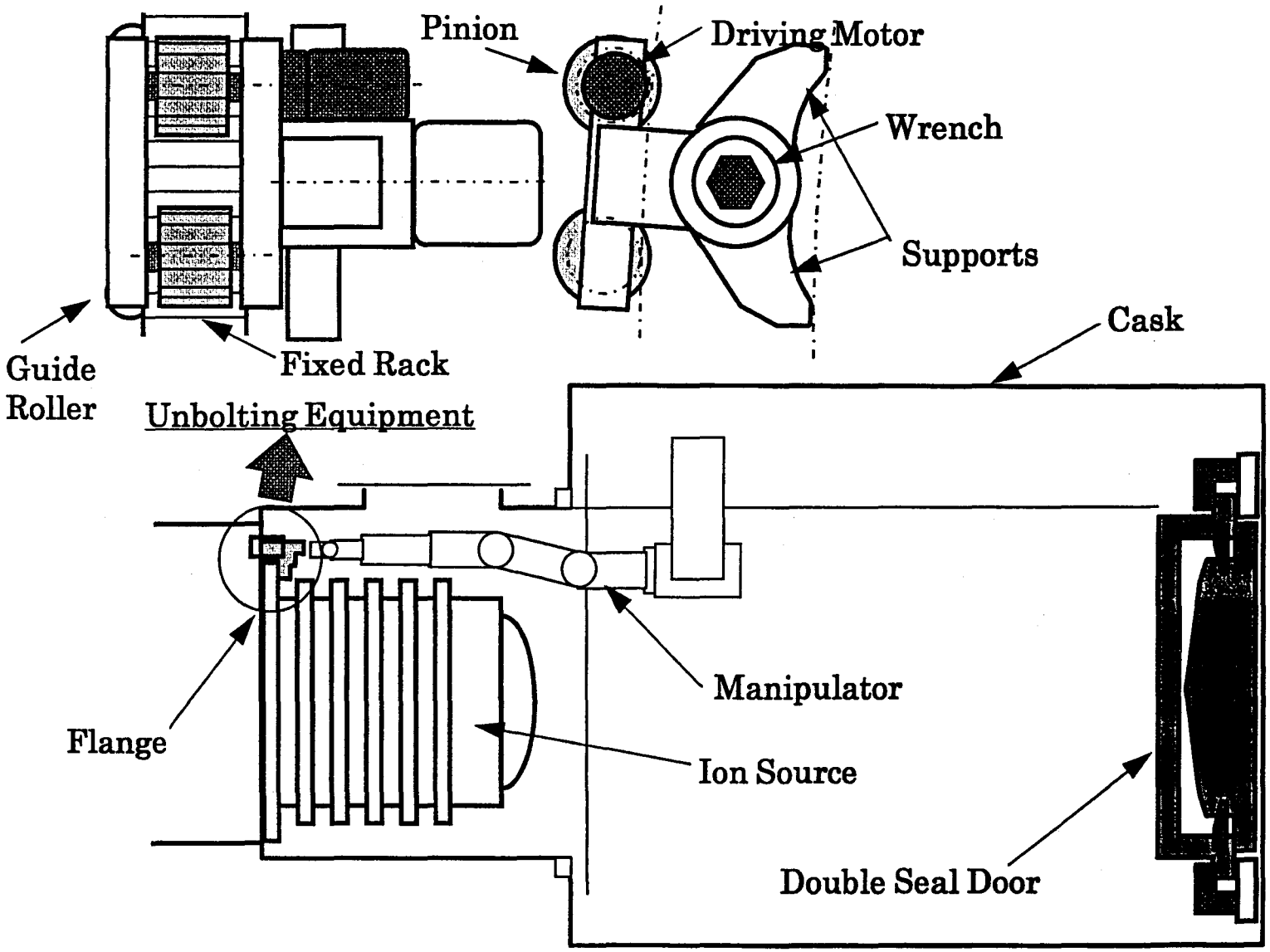

Fig. 3.2-23 Ion source flange handling tool

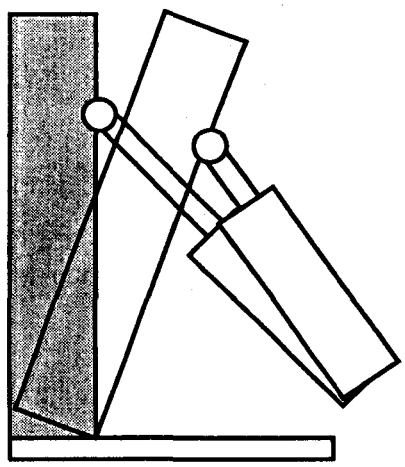

(a) Cylinder type

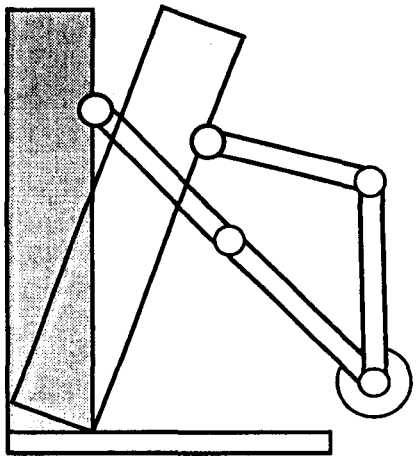

(b) Link type

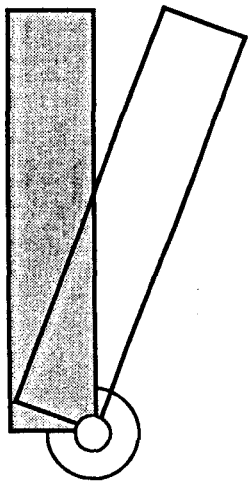

(c) Rotation type

Fig. 3.2-24 Tilting methods for the double seal door

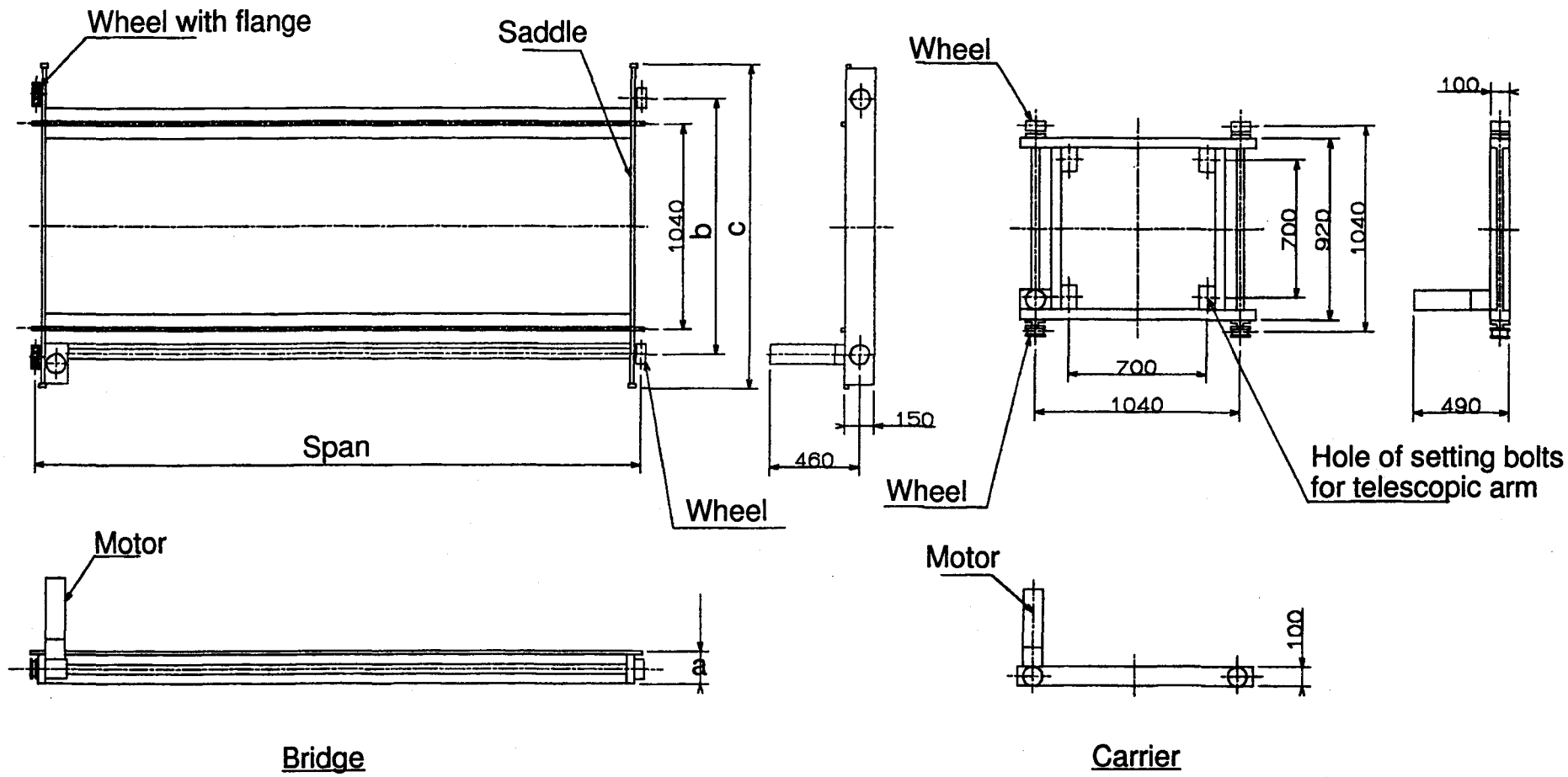

Fig. 3.3-1 Conceptual design of the crane bridge and carrier

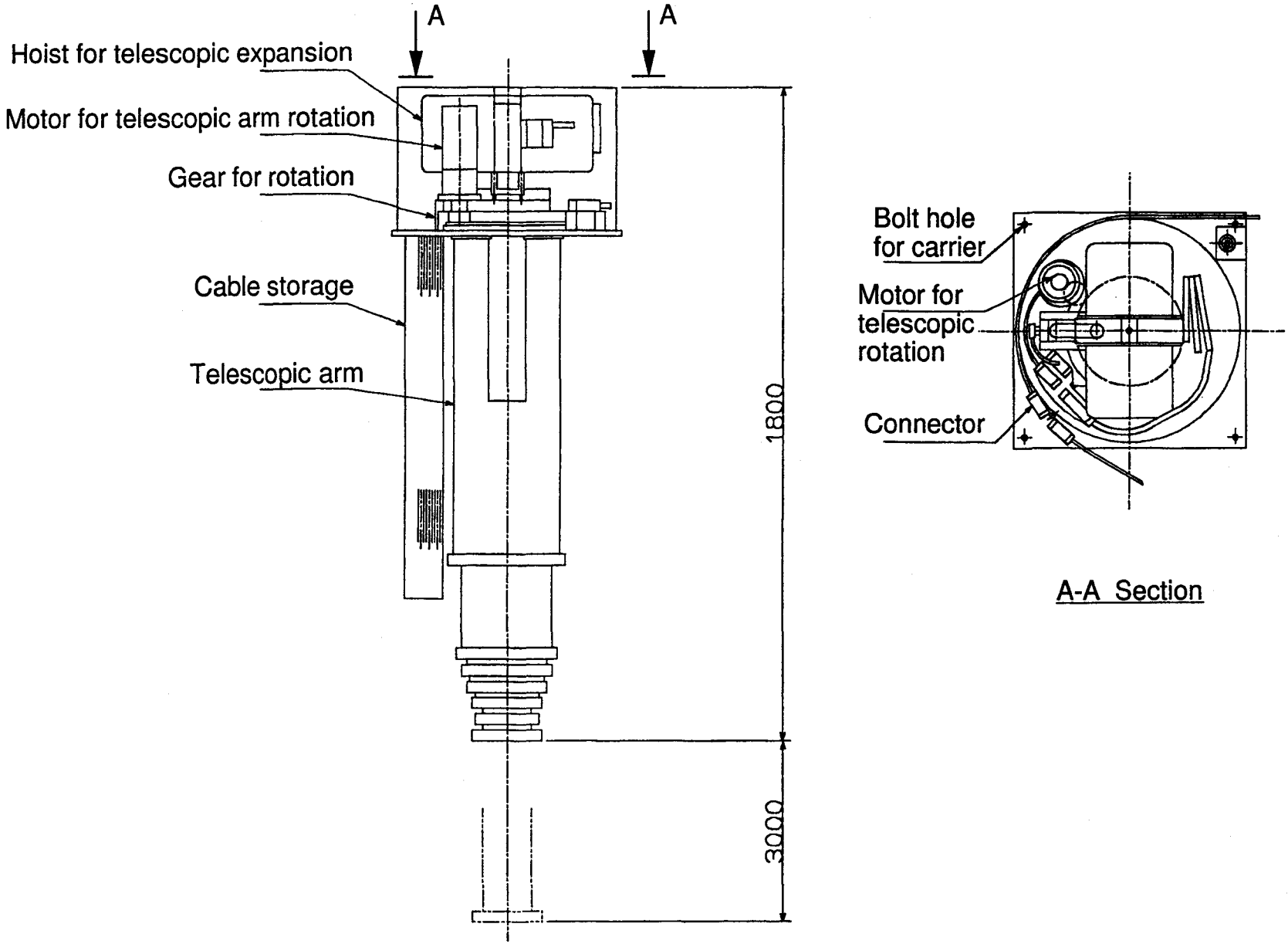

Fig. 3.3-2 Conceptual design of the telescopic arm

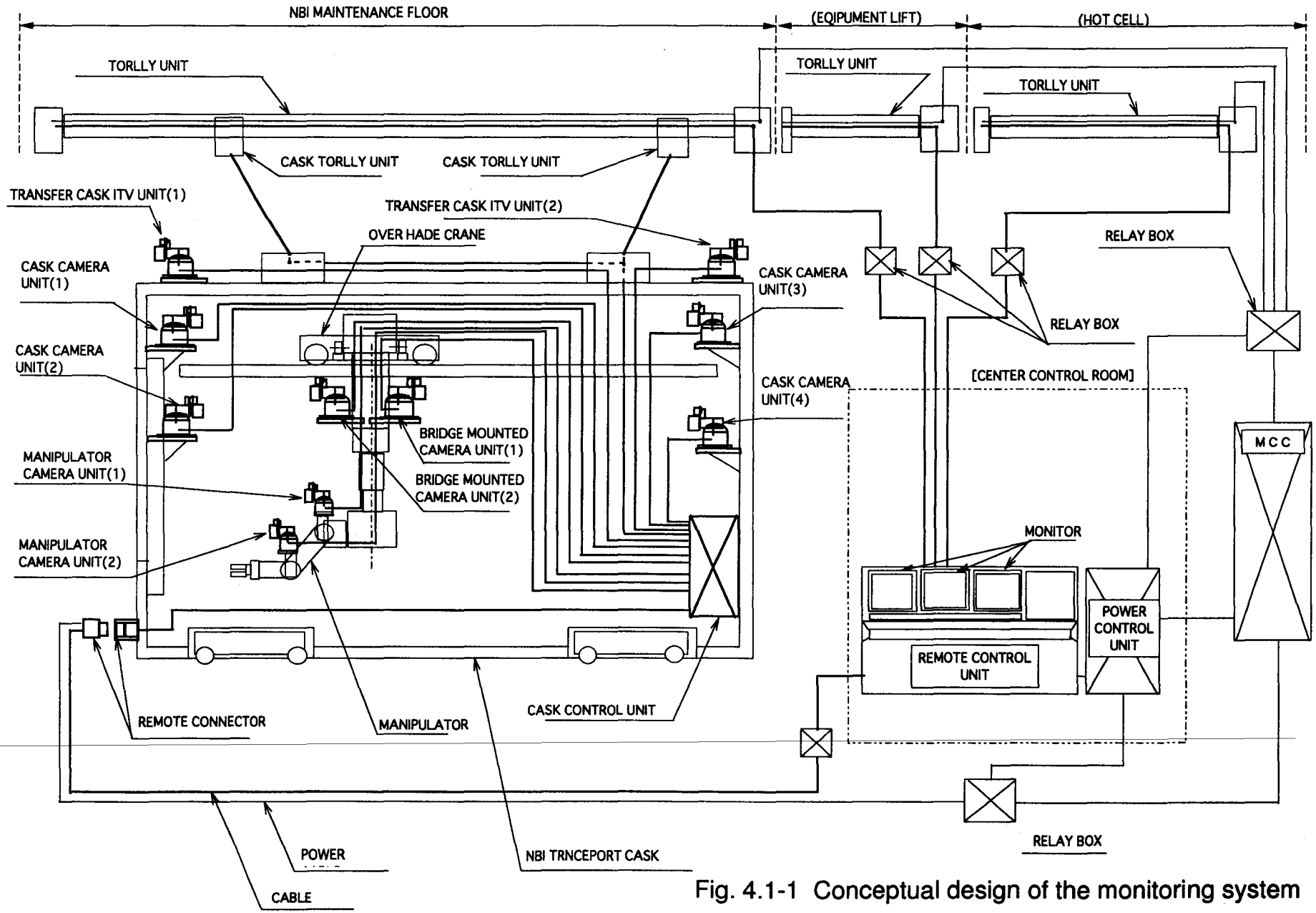

Fig. 4.1-1 Conceptual design of the monitoring system

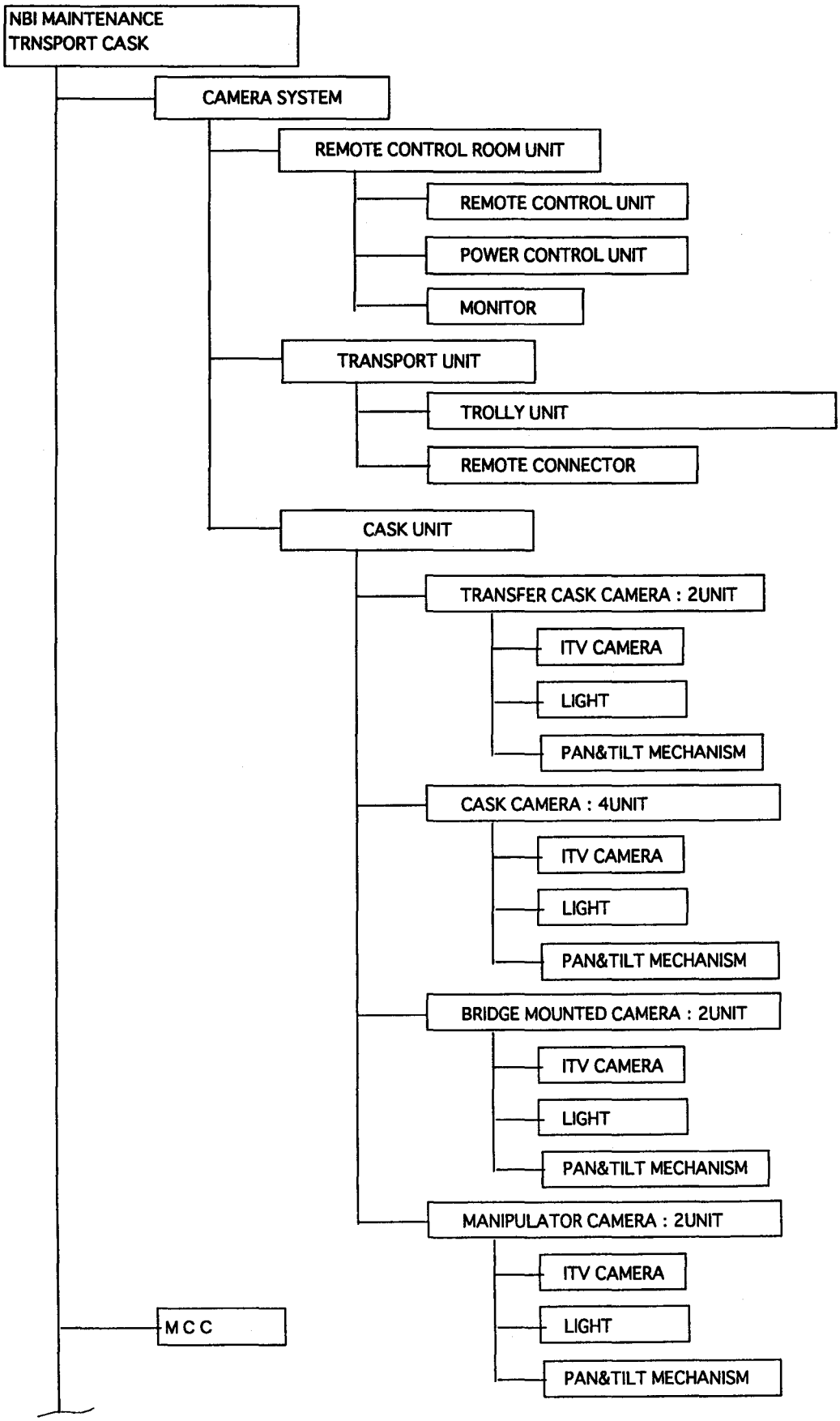

Fig. 4.1-2 Construction of the monitoring system

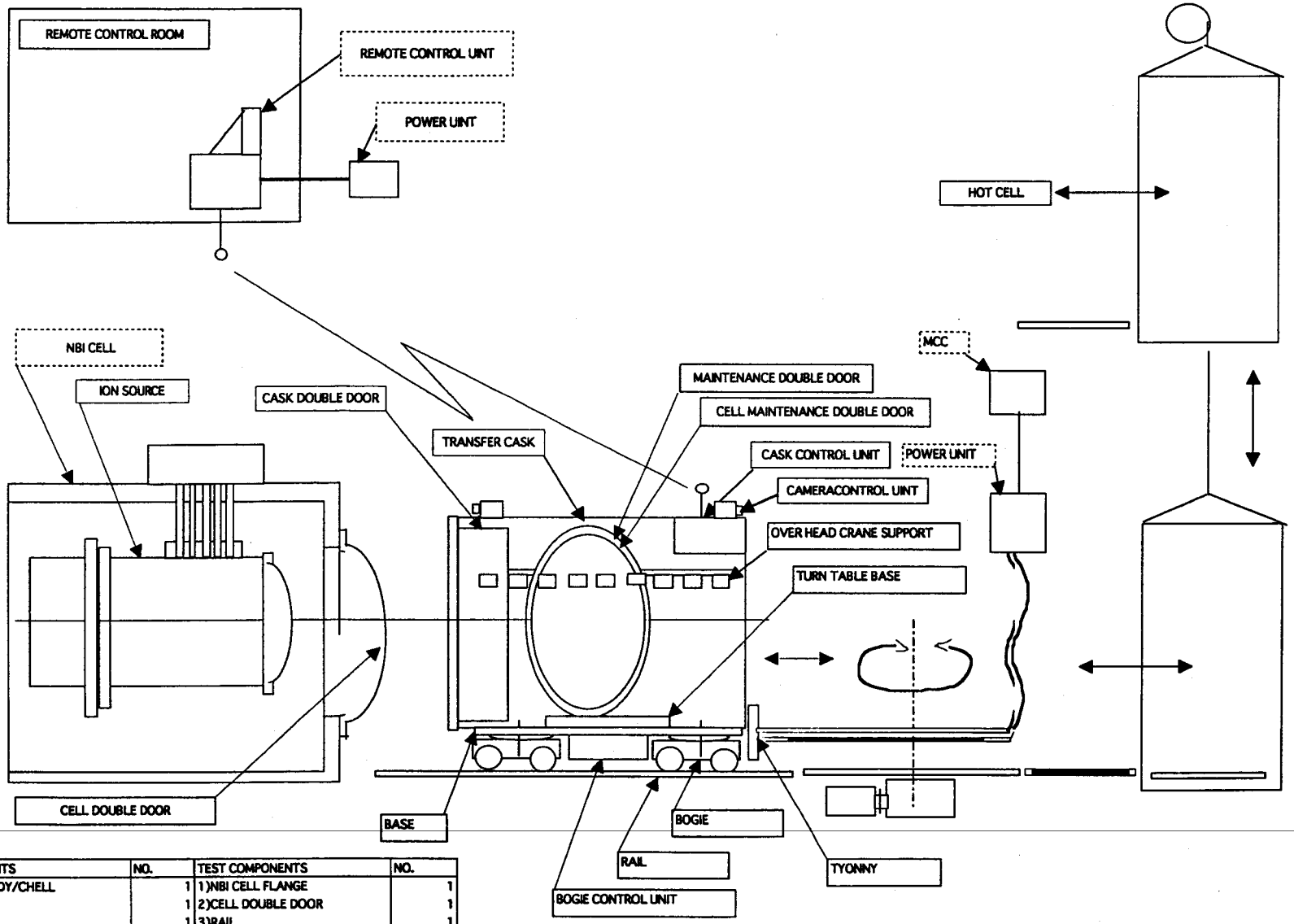

COMPONENTS	NO.	TEST COMPONENTS	NO.
1)CASKBODY/CHELL	1	1)NBI CELL FLANGE	1
2)DOUBLE	1	2)CELL DOUBLE DOOR	1
3)BASE	1	3)RAIL	1
4)TURNTABLE BASE	1	4)POWER UNIT	1
5) OVER HEAD CRANE SUPPORT	1	5)REMOOTE CONTROL UNIT	1
6)BOGIE	2		
7)DRIVE WHEEL	1		

Fig. 4.2-1 Overall NBI maintenance system

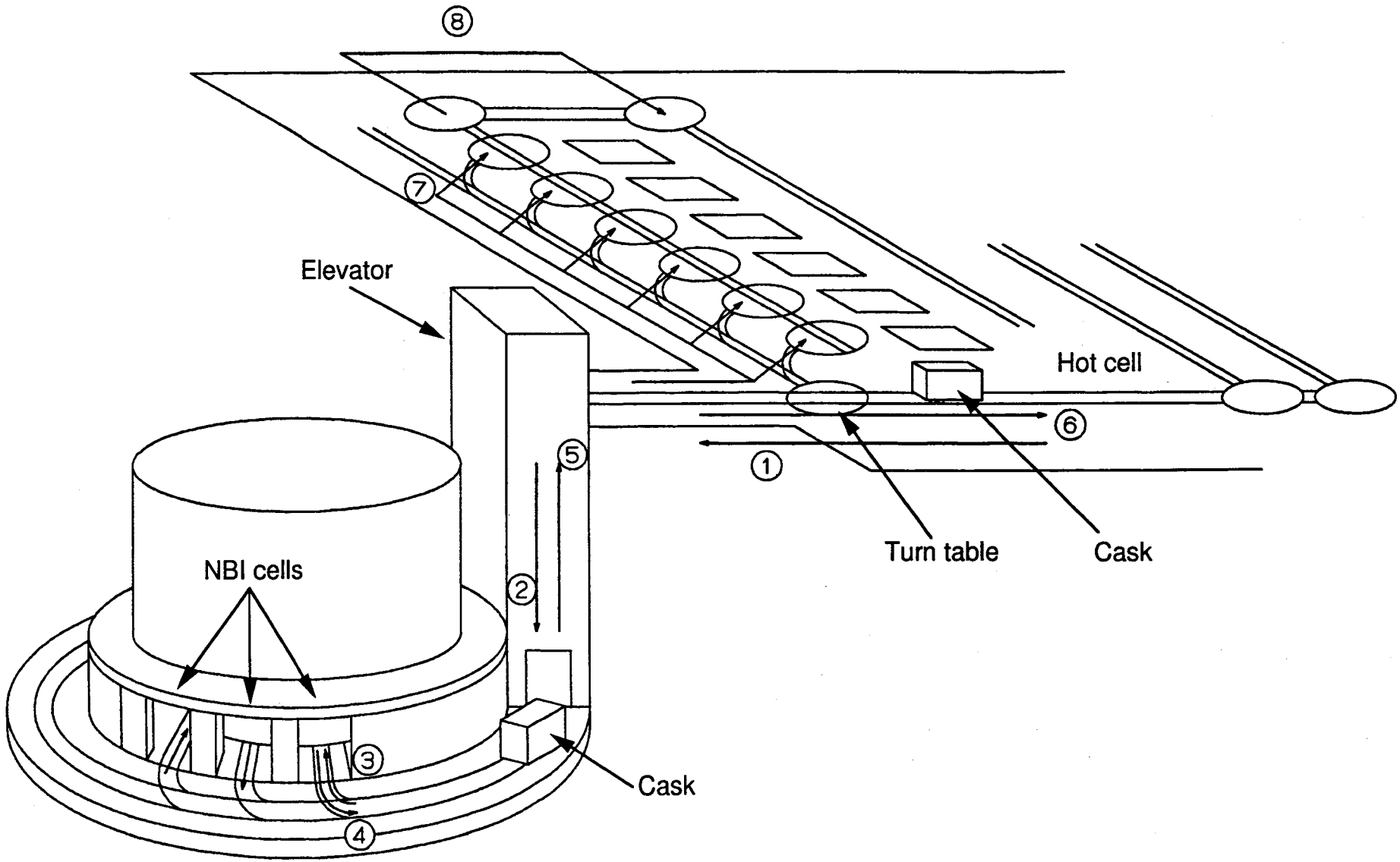

Fig. 5.1-1 Layout of the NBI manintenance area

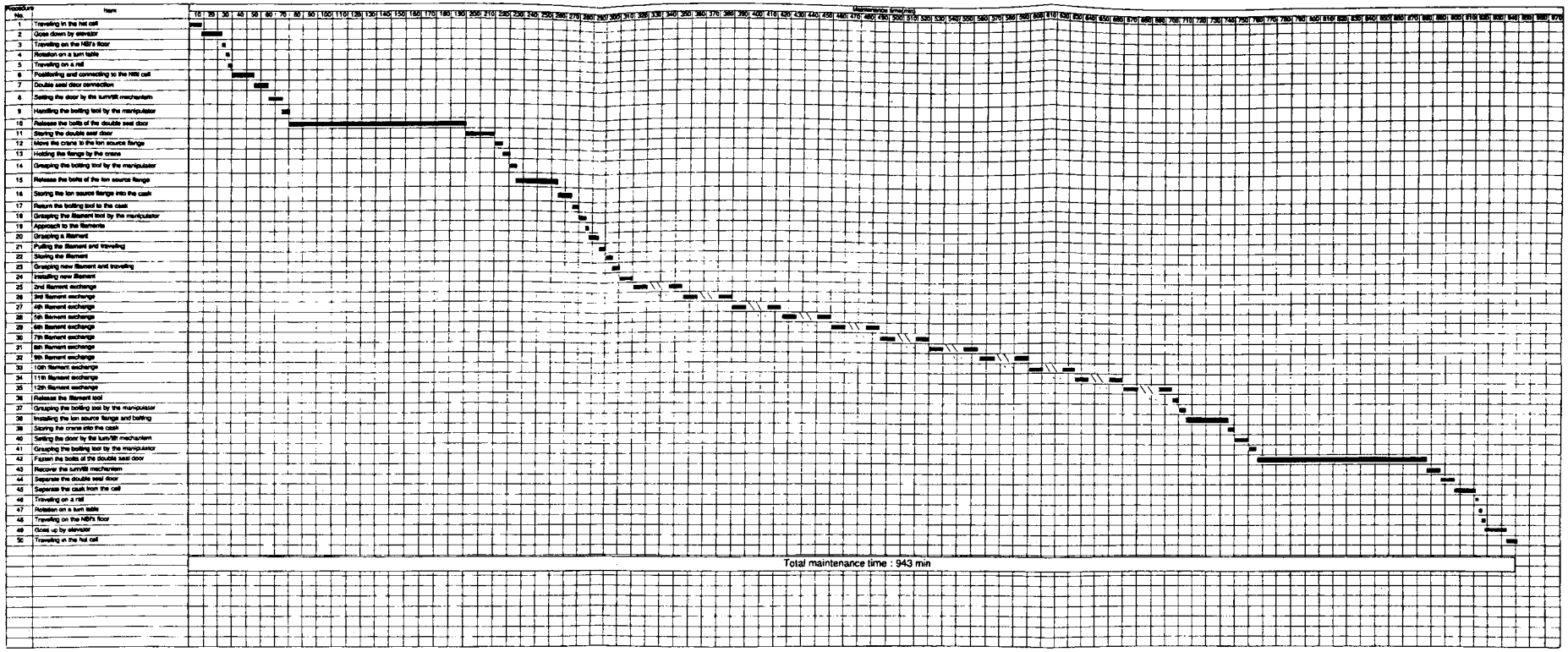

Fig. 5.1-2 Estimation for the filament replacement time

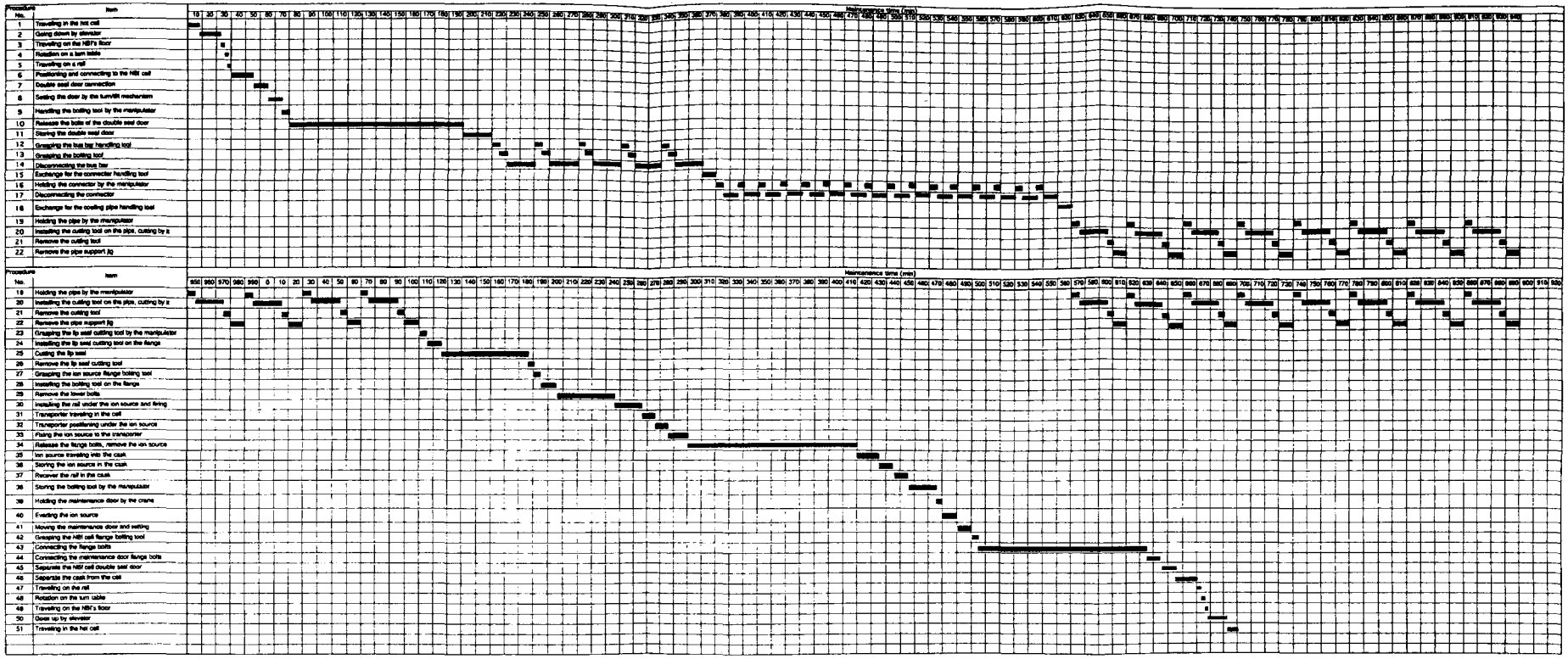

Fig. 5.1-3 Estimation for the ion source replacement time

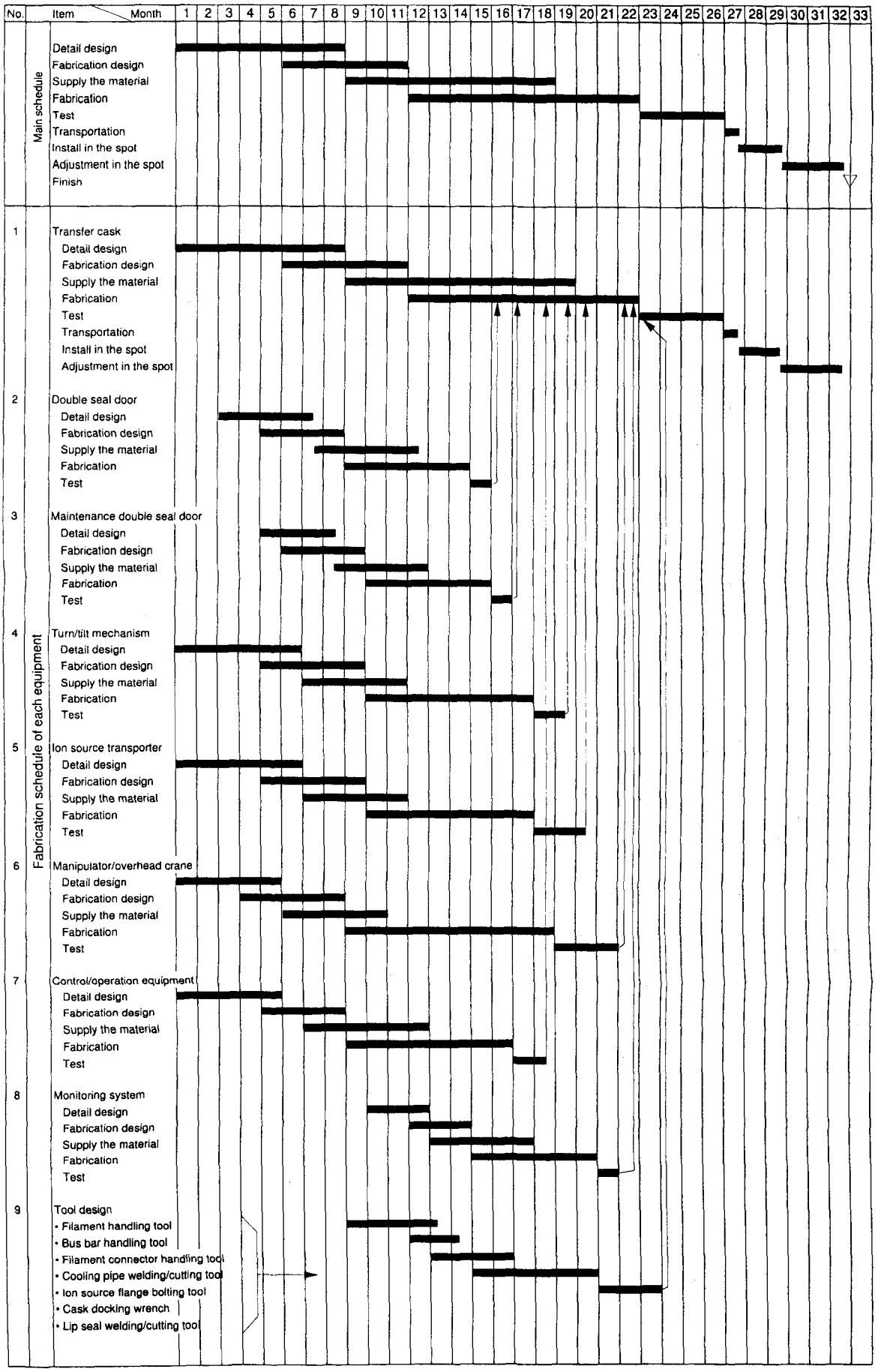

Fig. 5.3-1 Fabrication schedule of NBI maintenance system

国際単位系 (SI) と換算表

表 1　SI 基本単位および補助単位

量	名称	記号
長さ	メートル	m
質量	キログラム	kg
時間	秒	s
電流	アンペア	A
熱力学温度	ケルビン	K
物質量	モル	mol
光度	カンデラ	cd
平面角	ラジアン	rad
立体角	ステラジアン	sr

表 2　SI と併用される単位

名称	記号
分，時，日	min，h，d
度，分，秒	°，′，″
リットル	l，L
トン	t
電子ボルト	eV
原子質量単位	u

$1\ \mathrm{eV} = 1.60218 \times 10^{-19}\ \mathrm{J}$

$1\ \mathrm{u} = 1.66054 \times 10^{-27}\ \mathrm{kg}$

表 5　SI 接頭語

倍数	接頭語	記号
10^{18}	エクサ	E
10^{15}	ペタ	P
10^{12}	テラ	T
10^{9}	ギガ	G
10^{6}	メガ	M
10^{3}	キロ	k
10^{2}	ヘクト	h
10^{1}	デカ	da
10^{-1}	デシ	d
10^{-2}	センチ	c
10^{-3}	ミリ	m
10^{-6}	マイクロ	μ
10^{-9}	ナノ	n
10^{-12}	ピコ	p
10^{-15}	フェムト	f
10^{-18}	アト	a

表 3　固有の名称をもつ SI 組立単位

量	名称	記号	他の SI 単位による表現
周波数	ヘルツ	Hz	s^{-1}
力	ニュートン	N	$m \cdot kg/s^2$
圧力，応力	パスカル	Pa	N/m^2
エネルギー，仕事，熱量	ジュール	J	N·m
工率，放射束	ワット	W	J/s
電気量，電荷	クーロン	C	A·s
電位，電圧，起電力	ボルト	V	W/A
静電容量	ファラド	F	C/V
電気抵抗	オーム	Ω	V/A
コンダクタンス	ジーメンス	S	A/V
磁束	ウェーバ	Wb	V·s
磁束密度	テスラ	T	Wb/m^2
インダクタンス	ヘンリー	H	Wb/A
セルシウス温度	セルシウス度	℃	
光束	ルーメン	lm	cd·sr
照度	ルクス	lx	lm/m^2
放射能	ベクレル	Bq	s^{-1}
吸収線量	グレイ	Gy	J/kg
線量当量	シーベルト	Sv	J/kg

表 4　SI と共に暫定的に維持される単位

名称	記号
オングストローム	Å
バーン	b
バール	bar
ガル	Gal
キュリー	Ci
レントゲン	R
ラド	rad
レム	rem

$1\ \text{Å} = 0.1\ \mathrm{nm} = 10^{-10}\ \mathrm{m}$

$1\ \mathrm{b} = 100\ \mathrm{fm}^2 = 10^{-28}\ \mathrm{m}^2$

$1\ \mathrm{bar} = 0.1\ \mathrm{MPa} = 10^5\ \mathrm{Pa}$

$1\ \mathrm{Gal} = 1\ \mathrm{cm/s}^2 = 10^{-2}\ \mathrm{m/s}^2$

$1\ \mathrm{Ci} = 3.7 \times 10^{10}\ \mathrm{Bq}$

$1\ \mathrm{R} = 2.58 \times 10^{-4}\ \mathrm{C/kg}$

$1\ \mathrm{rad} = 1\ \mathrm{cGy} = 10^{-2}\ \mathrm{Gy}$

$1\ \mathrm{rem} = 1\ \mathrm{cSv} = 10^{-2}\ \mathrm{Sv}$

（注）

1. 表 1 — 5 は「国際単位系」第 5 版，国際度量衡局 1985 年刊行による。ただし，1 eV および 1 u の値は CODATA の 1986 年推奨値によった。
2. 表 4 には海里，ノット，アール，ヘクタールも含まれているが日常の単位なのでここでは省略した。
3. bar は，JIS では流体の圧力を表わす場合に限り表 2 のカテゴリーに分類されている。
4. EC 閣僚理事会指令では bar，barn および「血圧の単位」mmHg を表 2 のカテゴリーに入れている。

換　算　表

力	N(=10^5dyn)	kgf	lbf
	1	0.101972	0.224809
	9.80665	1	2.20462
	4.44822	0.453592	1

粘　度　1 Pa·s(N·s/m^2)= 10 P(ポアズ)(g/(cm·s))

動粘度　1 m^2/s=10^4St(ストークス)(cm^2/s)

圧力	MPa(=10 bar)	kgf/cm^2	atm	mmHg(Torr)	lbf/in^2(psi)
	1	10.1972	9.86923	7.50062×10^3	145.038
	0.0980665	1	0.967841	735.559	14.2233
	0.101325	1.03323	1	760	14.6959
	1.33322×10^{-4}	1.35951×10^{-3}	1.31579×10^{-3}	1	1.93368×10^{-2}
	6.89476×10^{-3}	7.03070×10^{-2}	6.80460×10^{-2}	51.7149	1

エネルギー・仕事・熱量	J(=10^7erg)	kgf·m	kW·h	cal(計量法)	Btu	ft·lbf	eV
	1	0.101972	2.77778×10^{-7}	0.238889	9.47813×10^{-4}	0.737562	6.24150×10^{18}
	9.80665	1	2.72407×10^{-6}	2.34270	9.29487×10^{-3}	7.23301	6.12082×10^{19}
	3.6×10^6	3.67098×10^5	1	8.59999×10^5	3412.13	2.65522×10^6	2.24694×10^{25}
	4.18605	0.426858	1.16279×10^{-6}	1	3.96759×10^{-3}	3.08747	2.61272×10^{19}
	1055.06	107.586	2.93072×10^{-4}	252.042	1	778.172	6.58515×10^{21}
	1.35582	0.138255	3.76616×10^{-7}	0.323890	1.28506×10^{-3}	1	8.46233×10^{18}
	1.60218×10^{-19}	1.63377×10^{-20}	4.45050×10^{-26}	3.82743×10^{-20}	1.51857×10^{-22}	1.18171×10^{-19}	1

1 cal = 4.18605 J（計量法）
= 4.184 J　（熱化学）
= 4.1855 J　（15 °C）
= 4.1868 J（国際蒸気表）

仕事率　1 PS（仏馬力）
= 75 kgf·m/s
= 735.499 W

放射能	Bq	Ci
	1	2.70270×10^{-11}
	3.7×10^{10}	1

吸収線量	Gy	rad
	1	100
	0.01	1

照射線量	C/kg	R
	1	3876
	2.58×10^{-4}	1

線量当量	Sv	rem
	1	100
	0.01	1

（86 年 12 月 26 日現在）