Moscow, ITEP

INSTITUTE OF THEORETICAL
AND EXPERIMENTAL PHYSICS

FERMILAB 50-95

FEB 2 1996

LIBRARY

R.D'Alessandro, V.Akimov, A.Bizzeti, S.Kuleshov, A.Martemyanov,
K.Mikhailov, P.Polosov, J.Schukraft, V.Serov, A.Smirnitsky,
K.Voloshin A.Yumashev.

ITEP-50-95

12

Fermilab Library
0 1160 0050683 6

Electronic channel for PPC Time Of Flight measurements

NAME	ID No.	M.S.

MOSCOW 1995

УДК 539.125.172 М-16

ELECTRONIC CHANNEL FOR PPC TIME OF FLIGHT MEASUREMENTS: Preprint 90-95/

R.D'Alessandro[1], V.Akimov[2], A.Bizzeti[1], S.Erlesbov[2], A.Martemyanov[2], K.Mikhailov[2], P.Polosov[2], J.Schukraft[3], V.Serov[2], A.Smirnitsky[2], K.Voloshin[2], A.Yumashev[2] - M., 1995 - 12p.

Various types of electronic channels for Time Of Flight measurements by mean of Parallel Plate Chambers are described. Different preamplifiers and discriminators were used. Electronics were included in the test beam facility at ITEP.

Fig. - 5, ref. - 3.

© Институт теоретической и экспериментальной физики, 1995

---

1) Florence (INFN and University)

2) Moscow (ITEP--Department of Nuclear Physics)

3) Geneve (CERN--PPE)

1. Introduction

One detector technique proposed in some **LHC** experiments is the **Parallel Plate Chamber** (**PPC**). Construction and parameters of this device are described in [1].

The advantages of **PPC** are:

- fast pulse response (rise time < 1 nsec)
- high rate capability (10^7 **cm**$^{-2}$ **sec**$^{-1}$)
- radiation hardness

Fast pulse response gives hope of using PPC for precise **Time Of Flight** (**TOF**) measurements.

Below the electronic channels used in these measurements are described.

2. Front end electronics demands

The electronic channel for **TOF** measurements using of **PPC** have been constructed according to the scheme shown on **Fig.1**.

Signal from the **PPC** was given via a small length cable to a special copper box where the preamplifier and main amplifier are placed. One of the main amplifier outputs was connected to a discriminator and then to the **TDC.** The other output was connected to an **Amplitude to Digital Converter** (**ADC**).

Two type of discriminators were used:

- **Constant Threshold Discriminator (CTD)**
- **Constant Fraction Discriminator (CFD)}**

The error in TOF measurements is defined by following factors:

1. drift of threshold during the time

2. uncertainty due to statistic fluctuation of the signal shape
3. noise on the input of the discriminator
4. dependence of switching time of the discriminator from signal amplitude

The time delay of discriminator triggering is defined by the following expression:

$$\Delta t = \frac{t_r E_{th}}{U} \qquad (1)$$

where t_r is the rise time of the signal, E_{th} is threshold of the CTD, U is the amplitude of signal. From expression it is seen that Δt varies from t_r to $\Delta t_{min} = t_r E_{th}/U_{max}$.

Timing uncertainty of the **CTD** depends on the time slope of input pulse so this discriminator can be used as a precise timing device only in the case of a small range of amplitude of the input signals. Sometimes time correction can be done if the time - amplitude dependence is known.

CFD is used for more precise **TOF** measurements in detectors with a large range of signal amplitudes. In this case expression (1) is not valid and **CFD** effectively decreases timing uncertainty defined by statistic variations of signal amplitudes.

The noise on the input of the discriminator should be taken into account if high TOF precision must be achieved. Noise contribution in timing uncertainty is defined by expression :

$$\sigma_t = \sigma_n \frac{\Delta t}{\Delta U} \qquad (2)$$

where σ_n is the noise on input of discriminator. $\Delta U/\Delta t$ is the slope of signal pulse. For **CTD** the expression looks like this:

$$\sigma_t = \sigma_n \frac{t_r}{U} \qquad (3)$$

where t_r is the rise time of the signal, **U** is its amplitude.

For **CFD** this expression becomes:

$$\sigma_t = \sigma_n \frac{t_r \sqrt{1+f^2}}{\Delta U} \qquad (4)$$

where **f** is the division coefficient of the **CFD** inverse signal (usually **f** = 0.5-0.2), $\Delta U = U_1 - U_2$ is the subtraction of the direct and the inverse signals on the **CFD** inputs. From (3) and (4) it is seen that noise contributes more in timing uncertainty in case of **CFD**. But **CFD** very effectively decreases timing uncertainty defined by statistic variations of signal amplitudes so the time resolution is usually better in case of large range of input signal amplitudes.

The expressions (3), (4) define the demands of the amplifiers :

- large signal to noise ratio: this factor is very important for high efficiency of **PPC**; time uncertainty due to noise has linear dependence of this factor;
- fast pulse response; since the noise increases as the square root of frequency while the rise time slope increases linearly it is evident that decreasing of rise time has advantages.

For our application (time resolution equal to 100-200 psec) parameters of the preamplifiers (and main amplifiers connected) must be the following:

Gain	5-10 V/pC
Rise time	better than 5 nsec
Noise	better than 2000 e

3. Front end design

Two different front end designs have been tested on **ITEP** beam facility.

One design included preamplifier consisting of an discrete components (**INFN**) and there was no additional signal amplification.

Other design used hybrid preamplifier(**ITEP**) and main amplifier.

3.1 Discrete component design

This type of amplifier [2] has been mounted with discrete components, using conventional mounting techniques. Schematic layout of this device is shown on **Fig.2.**

The circuit consists of two cascode stages with an emitter follower. The current shunt feedback ensures also proper biasing of the stages. The current flowing in the first stage is of the order 0.5 mA, the whole circuit needs only one power supply . The parameters of this amplifier are:

Gain	5V/pC
Rise time	3.3 nsec
Noise	2500 e^- (with no capacitor on input)

This amplifier was placed in screening box to decrease induced signals. **CFD** was used to achieve perfect timing.

PPC detector have 20 pF capacitance so the rise time of signal from the device was 5 nsec.

3.2 Hybrid design

Good time resolution can be obtained if signal to noise ratio is high. In this case the demands to amplifier rise time is not so critical. In Russia amplifier with high signal to noise ratio was designed [3]. The scheme of this amplifier is shown on **Fig.3**.

Russian high frequency low noise transistors (KT396) were involved. Amplifier was constructed on hybrid technology. On **Fig.3** dimensions of package are presented (in mm linear units). Cascode circuit with current shunt feedback is included in design. Only one polarity power voltage is applied. Power supply current is 13.3 ma

This amplifier was tested with a sharp charge injection . Injected charge corresponded to 22 fC. The parameters of step response are:

Rise time	5 nsec
Fall time	12 nsec
Gain	1.4 V/pC

The noise vs. input capacitor was measured for four means of capacity 10 pF, 24 pF, 39 pF, 51 pF. The picture of noise - capacitor dependence is shown on **Fig.4**.

The noise with no capacitor on the input was 1230 e^-. This amplifier was placed with the main amplifier in copper box and was connected via short cable to the **PPC**. The rise time from **PPC** was 6 nsec.

The main amplifier design was based on a differential **μA733** video amplifier and full gain reached 7 V/pC. In this case signal to noise ratio was higher (by factor 2) but rise time was slower (by factor 2.5) then the discrete component amplifier.

4. CFD design.

For precise **TOF** measurements in **ITEP** a simple **CFD** based on a fast comparator **AD96687** was constructed. This comparator has a small triggering delay and high sensitivity. The scheme of **CFD** is shown on **Fig.5**.

This scheme consists of a **CFD** (**COM1**) and an amplitude discriminator (**COM2**). The output of **COM2** is connected to the latch inputs of COM1. When the input signal is more than the threshold of **COM2** it produces enable pulse on latch input of **COM1** . If the comparison of the delayed direct signal and the decreased inverse signal takes place on **COM1** during the duration of latch pulse information about timing position of the input signal is available on the output of the **CFD.** The trigger chip **500TM131** is used for time shaping. The transistor circuit on the output gives the **NIM** level.

The **CFD** was tested in **ITEP.** Test signals were given to the test input of the amplifier with PPC capacitance on the input. Time uncertainty was <100 psec (rise time of pulse was 2 nsec) in a range of amplitudes from 20 mV to 1 V.

5. Conclusions.

Electronics set-up shown on **Fig.1** was arranged on the ITEP beam test facility. A **CAMAC** system connected to **PC/AT 386** was used during the runs. **LeCroy 2249 ADC** and **LeCroy 2228 TDC** were used.

Time resolution equal to 250 psec was achieved during test runs on both type of preamplifiers.

Some improvements must be done :

- include new amplifiers with less rise time
- achieve more higher signal to noise ratio
- estimate time uncertainty of the experimental set-up

- include a new main amplifier for high gain
- install the preamplifier directly on the PPC.

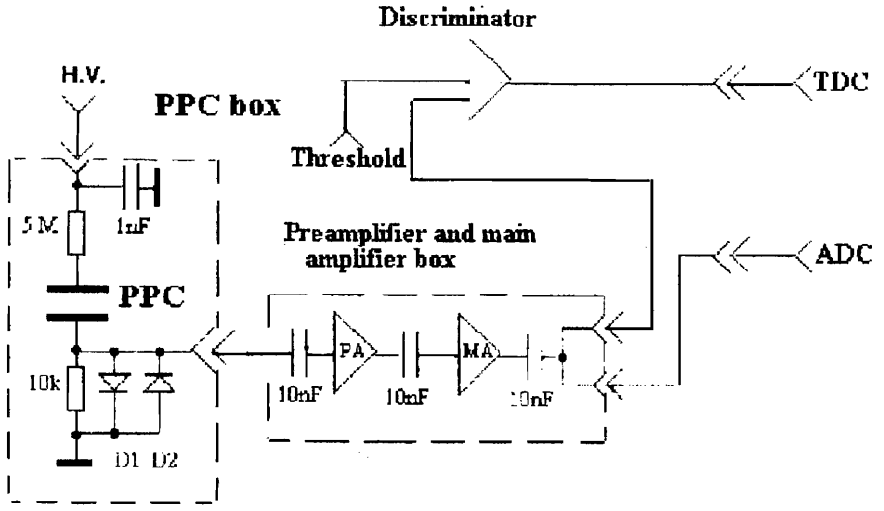

Fig.1 Electronic channel for PPC

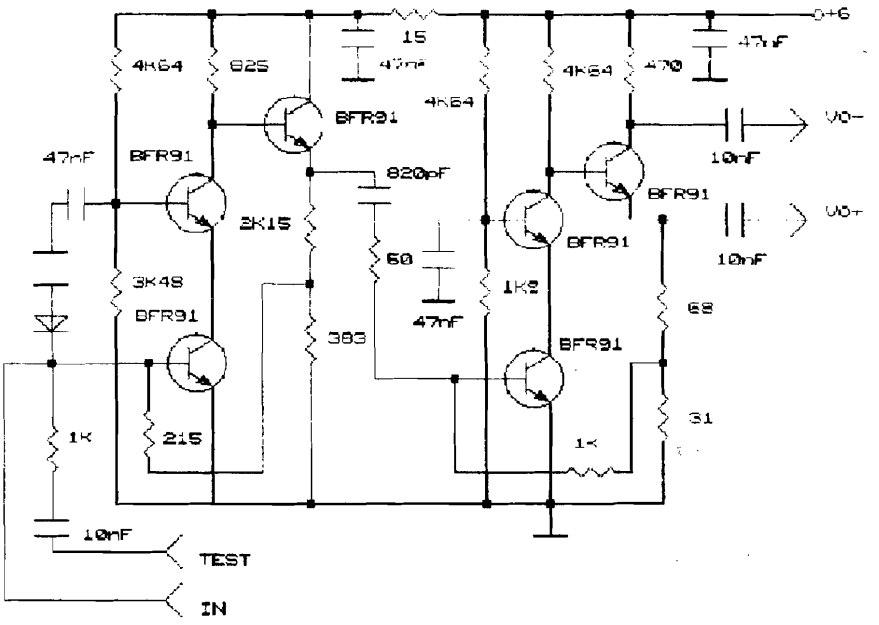

Fig.2 Discrete components amplifier

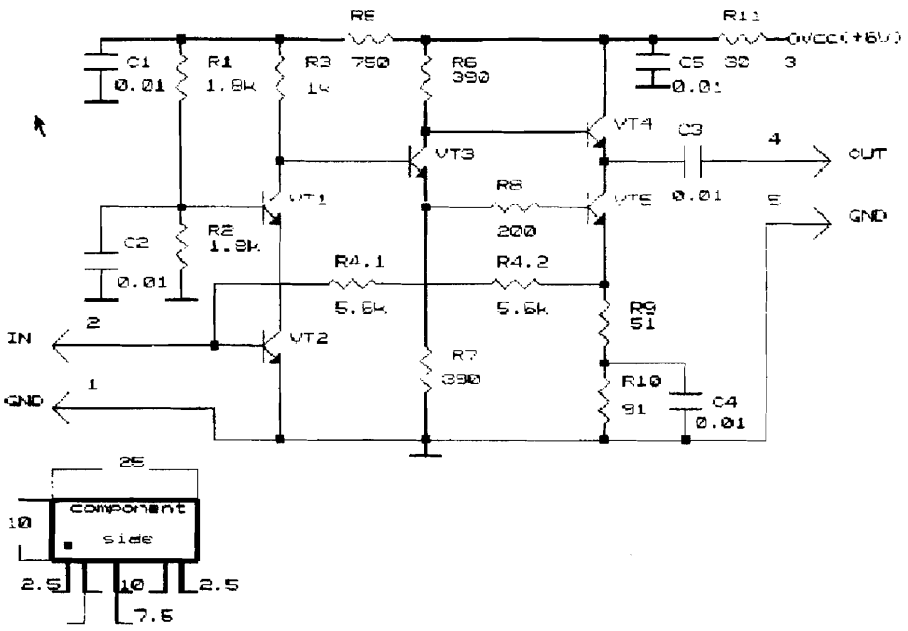

Fig.3 Hybrid amplifier

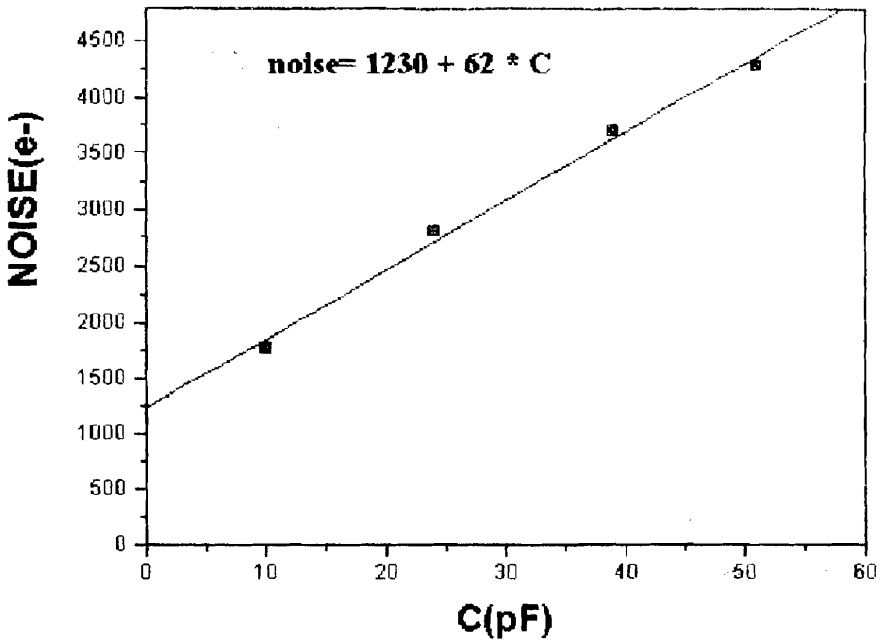

Fig.4 Noise v.s. input capacitance

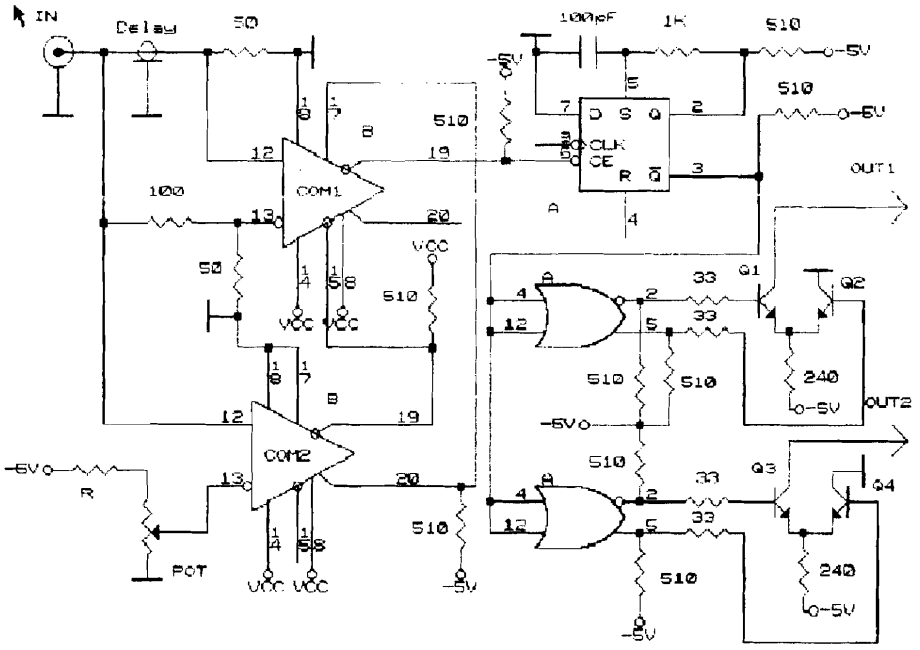

Fig.5 The Constant Fraction Discriminator layout

References

1. V.Akimov et al.,Nucl.Instr. and Meth. A344 (1994) 120-124
2. D'Alessandro, Preprint DFF 185/4/1993, INFN, Florence, Italy
3. A.Martemyanov. WASA MEMO,Uppsala,Sweeden,1994

М.А.Полозов и др.

Электронный канал РРС для времяпролетных измерений.

Подписано к печати 04.10.95 Формат 60x90 1/16 Офсетн.печ.
Усл.-печ.л.0,75 Уч.-изд.л.0,5 Тираж 121 экз. Заказ 50.
Индекс 3649

Отпечатано в ИПМ, 117259, Москва, Б. Черемушкинская,25