ITEP-47-00

Institute of Theoretical
and Experimental Physics

FERMILAB
10
MAR 22 2001
LIBRARY

47-00

V. Akimov, A. Akindinov, V. Golovine,
S. Kuleshov, A. Martemianov, V. Petrov,
V. Plotnikov, P. Polozov, A. Smirnitski,
K. Voloshin

Fermilab Library
0 1160 0089668 2

Conceptual Features of Front-End Electronics for a New Time-of-Flight Technology

Moscow 2000

UDK 539.1 M-16

CONCEPTUAL FEATURES OF FRONT-END ELECTRONICS FOR A NEW TIME-OF-FLIGHT TECHNOLOGY: Preprint ITEP 47–00/

V. Akimov, A. Akindinov, V. Golovine, S. Kuleshov, A. Martemianov, V. Petrov, V. Plotnikov, P. Polozov, A. Smirnitski, K. Voloshin - M., 2000 - 7p.

Described in the article is a modern front-end electronics designed to be used with gaseous detectores of parallel-plate geometry — a new technology developed for time-of-flight measurements.

As the majority of the detectors are long since being known, the progress in this technology became possible mostly due to successful development of the front-end electronics.

Описана современная измерительная электроника, разработанная специально для времяпролетных измерений на основе новой технологии — газовых плоско-параллельных детекторов.

Поскольку большинство детекторов данного типа давно известно, прогресс в технологии стал возможен прежде всего благодаря успешному развитию измерительной электроники.

Fig. - 3, ref. - 8 name.

© Институт теоретической и экспериментальной физики, 2000

A copy of this preprint is available on the Web at
http://triton.itep.ru/kl/ITEP-ALICE/ITEP4700/ITEP4700.html

1. Introduction

Since 1992, a group of ITEP experimentalists has been developing, building, and testing, under beam conditions, various versions of fast front-end electronics (FEE), intended to be used in high-precision time-of-flight (TOF) measurements. The activities were undertaken in the framework of the ALICE TOF project, aimed in developing a TOF technique based on modern gaseous detectors. The task is to build, at a reasonable cost, an unprecedented high-granular TOF system, covering over 100 m^2, and providing a 100–200 ps accuracy in timing measurements. During the first 5–6 years of R&D, there was a little understanding of the possibilities opened by using parallel plate gaseous detectors, operated in the avalanche mode, for high-precision TOF measurements. This led to iterations in developing both the detector and the electronics: better adaptation of the electronics to the detector stimulated new steps in the detector development which then led to further electronics improvements, etc.

After the 8 years, several steps have been made in developing the new TOF technique. During the first phase, a Parallel Plate Chamber (PPC) was studied as the TOF detecting element. PPC was assembled of two flat parallel conductive electrodes with a 0.3–2 mm-wide gas gap between them. The chamber description may be found in [1] and, more detailed, in [2].

To enforce sparks suppression inside the gas volume, it was decided to introduce, in different ways, resistivities inside the detector. Starting from 1999, the initial version of hybrid PPC/RPC for TOF was experiencing several transformations, known now as a DRPC [3], a Glass RPC, and a Multi-gap RPC [4]. All these detectors have plate parallel geometry of the electrodes, and work in the avalanche mode of gas amplification, contrary to Pestov spark counters [5].

Fast FEE, designed to be used with PPC, was later successfully employed with all the versions of RPC for TOF. The most significant difference between RPC and PPC is that RPC has a 10 times larger gas amplification, which only reduces the requirements for FEE and does not change its basic principles.

Thanks to pioneer investigations of PPC employment in timing measurements, and thanks to step-by-step development of the detector, passing trough tens of versions, basic conceptual features of FEE for this new TOF technique have been worked out. Both PPC and different embodiments of RPC [6], except DRPC, had long since been known. A new implementation of these detectors, in high-precision TOF measurements, was mostly based on the results of special FEE developments.

Later in this article, basic parameters of modern FEE are described. This FEE was used with the latest versions of PPC for TOF, and is now used with all types of RPC for TOF.

All the electronics was created in the SMD standard, the FEE is simple, stable, and cheap. The first results on the electronics may be found in [7, 8] and [2].

2. Demands for Preamplifier and Main Amplifier

The PPC/RPC/DRPC electronics requirements are governed by the following chamber properties:

1. Chamber gap width varies between 0.3 mm and 0.2 mm. The number of gaps is chosen between 4 and 6. The RPC size is 3×3 cm^2. Hence, the capacitance on the amplifier input varies between 10 pF and 25 pF.

2. Gas mixture is 85%freon + 10%SF_6 + 5%isobutane.

3. Gas amplification is 10^7 in RPC.

4. Rise time of the signal is 500 ps, total signal duration is about 2 ns.

It should be also taken into account that:

1. Using different types of preamplifiers have shown that, due to the large chamber size and parasitic connections on the preamplifier input, high gain preamplifiers should be avoided.

2. Additional signal amplification for PPC should be undertaken because of its relatively small output amplitudes. RPC signals appear to be 10 times larger than those from PPC, and one amplifier with small ($\sim$ 2 V/pC) gain must satisfy the needs in this case.

3. Leading Edge Discriminator (LED) is preferable because of its simplicity and its signal shape.

4. LED timing distribution stipulated by amplitude diversity is defined by the expression

$$\Delta t = E_{th} \cdot t_r / U, \tag{1}$$

where E_{th} is the discriminator threshold, t_r is the signal rise time, and U is the maximum signal amplitude. Additional amplitude measurements must therefore be undertaken to perform an off-line T(A)-correction.

5. LED timing uncertainty coming from the noise on the discriminator input is defined by the expression

$$\sigma_t = \sigma_{noise} \cdot t_r / U, \tag{2}$$

where σ_{noise} is the noise level.

Expressions (1) and (2) show that the amplifier must have low intrinsic noise and be adapted for high frequencies. These features are extremely important when low signals from PPC are to be measured. In the RPC case, the expressions (1) and (2) work only in a narrow part of the amplitude spectrum.

3. Chamber Connection to the Preamplifier

Fig. 1*a* shows the way the multi-gap RPC is connected to the high-frequency FEE. The RPC and the preamplifier are placed on the same board called PCB, or *motherboard*. The PNP transistor on the input cascade is preferable since it has good protection against streamer pulses. As RPC has 20 times less streamer fraction than PPC, the diode protection in this case may be excluded.

The idea of Time-over-Threshold (TOT) measurements is illustrated in Fig. 1*b*. Output signal from a special amplifier, called Amplifier Tail Shaper (ATS), has a duration which depends on the charge collected at its input. If such a signal is put to a discriminator with a hysteresis and a definite threshold, the duration of the output signal should be proportional to the input charge. The leading edge of the pulse produces a jitter which corresponds to the chamber TOF, while the trailing edge jitter shows the input charge or the chamber amplitude. This method allows to exclude direct amplitude measurements which are important for T(A)-correction.

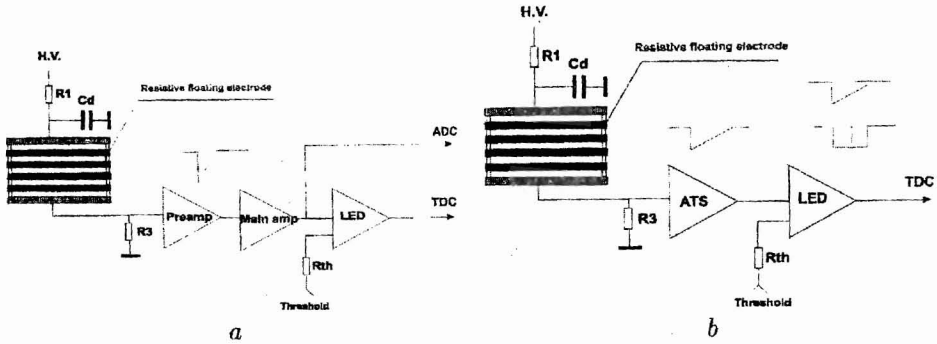

Fig. 1. Front-end electronics concept: *a* — chamber output connection, *b* — the idea of TOT measurements.

4. Fast Preamplifier and Main Amplifier for Single Cell Tests

4.1. Fast Preamplifier

Fig. 2*a* shows the layout of the fast preamplifier designed by ITEP-CPTA, Russia. A high frequency and low noise transistor BFT92 is placed on the preamplifier input. There are two differential outputs. The PPC preamplifier has a usual cascade scheme and a negative feedback to decrease the input impedance, which is also important for the transistor protection. When a large streamer signal comes to the input, the transistor becomes saturated and the current is limited.

The preamplifier parameters are summarised in Table 1. All the parameters were measured with a PPC connected to the input.

Gain, V/pC	0.8
Rise time, ns	1.6 ns
Noise (on input, $C = 0$), fC	0.240

Table 1. Preamplifier parameters

4.2. Main Amplifier

FEE for ALICE TOF consists of the fast preamplifier and the main amplifier. As test results have shown, it is very important to improve the main amplifier stability and avoid the oscillations, whether the preamplifier and the main amplifier are connected via short or long cables. The main amplifier has a high gain and large maximum negative and positive swings at the output. Fig. 2*b* represents the main amplifier layout designed by L. Parlakyan, YerPhi, Armenia.

Following are the amplifier properties.

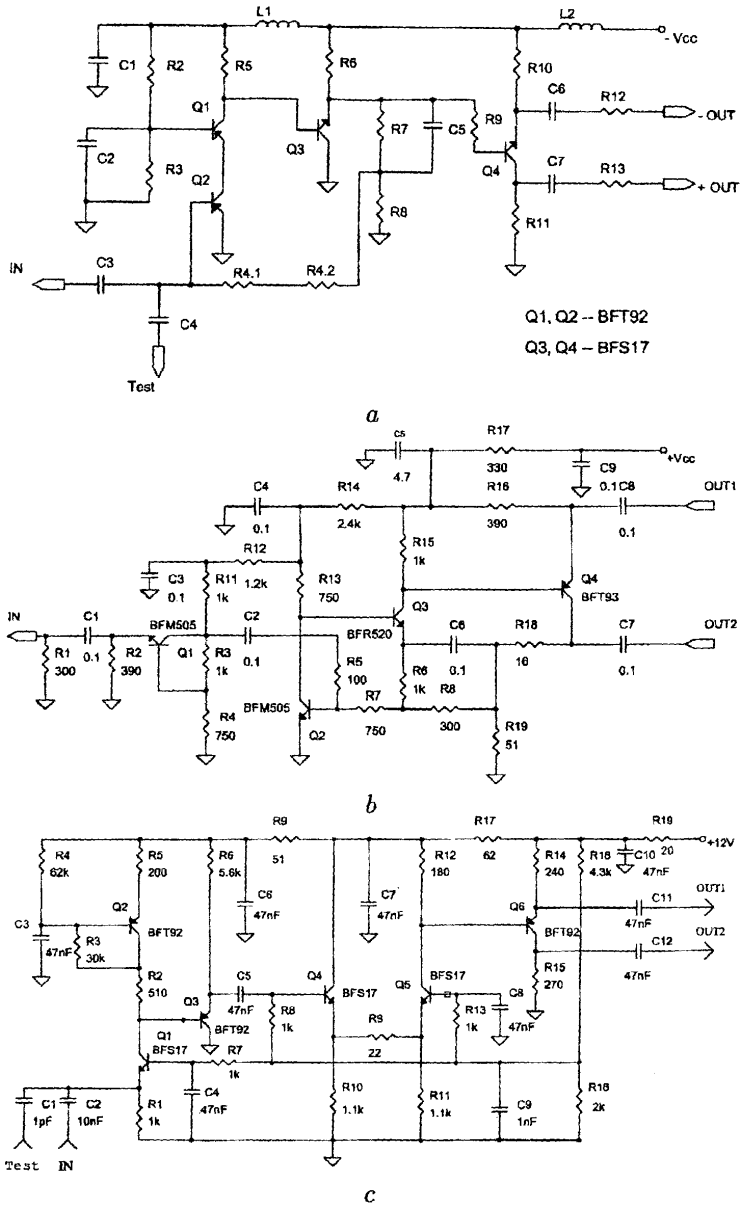

Fig. 2. Front-end electronics layouts: *a* — fast preamplifier, *b* — main amplifier, *c* — amplifier tail shaper.

1. The input cascade is designed the common base schematics, the input resistance is 50 Ω in a wide range of amplitudes.

2. The main part of the schematics (Q1–Q2) performs a *double current* scheme where the negative current feedback is defined by the R7 resistor. The negative feedback is effective if the impedance of the signal source is large. In this case, the impedance is produced by the common base cascade.

3. Output impedance of the output cascade equals to 2 Ω. Negative feedback, based on the R9 and the R10 resistors, makes it possible for this scheme to conform with the large output impedance of the previous scheme.

Maximum output swing depends on DC parameters of Q2–Q4 transistors and is equal to 1300 mV.

The main amplifier parameters are listed in Table 2.

Rise time	1 ns
Overshoot	< 5%
Gain	26 dB
Input noise (RMS)	24 μV
Max. output negative and positive swing	1300 mV
Input resistance	50 Ω
Output resistance	< 2 Ω
Current consumption	8.8 mA
Package size	$20 \times 35 \times 6$ mm^3

Table 2. Main amplifier parameters.

5. Amplifier Tail Shaper

ATS for TOF measurements was designed by ITEP-CPTA group from Russia. Fig. 2*c* shows the ATS layout. The input cascade has the common base scheme with the input impedance being equal to 8 Ω. Differential cascade Q4–Q5 introduces artificial limitation of the signal amplitude to avoid output overflows. ATS parameters are summarised in Table 3.

Pulse duration dependence on the input charge is shown in Fig. 3. It may be seen that the linear regime spreads from 20 fC up to 2 pC.

This amplifier was designed specifically for RPC. Because of the large signal, division of the scheme into a preamplifier and a main amplifier was eliminated. The amplifier has a rather low gain and may be placed close to the chamber.

Rise time	1.6 ns
Gain	2.5 V/pC
Input noise (RMS)	0.5 fC
Input resistance	8 Ω

Table 3. ATS parameters.

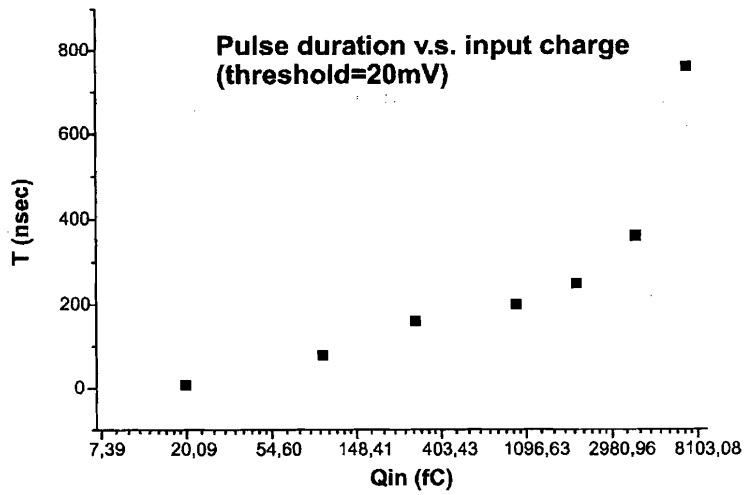

Fig. 3. Amplitude dependence of the ATS pulse duration.

6. Conclusions

Single cell tests have shown good operation of both the preamplifier and the main amplifier. Better than 100 ps time resolution has been achieved with this front-end electronics.

ATS is used in multi-cell tests on a 32-cell module. The test results show that less than 100 ps resolution can be reached on the module as well. TOT idea works correctly.

7. Acknowledgements

The pleasure of the authors is to express their gratefulness to colleagues from a number of institutes who supported this work. Special thanks are addressed to J. Schukraft, who helped us at the very beginning of R&D when any result seemed to be so far from realisation, to F. Piuz for his deep interest in the new TOF technologies and his help in organising beam tests at CERN, to W. Klempt, whose critical view of the results we always valued and who pushed us to follow the R&D time schedule. We are also grateful to J.-C. Berset, C. Engster, J.-C. Santiard, A. Malinine, E. Spiridenkov, A. Kluge, P. Fonte, M. C. S. Williams, L. Parlakyan, F. Formenti, A. Rudge, and G. Paić. We would like to mention the support which we received from the ALICE PID Panel, in particular, from F. Sauli. Our competition with GSI TOF group, guided by H. R. Schmidt and Yu. Pestov, lasted for several years and contributed to a significant breakthrough in FEE development for TOF measurements.

The R&D on FEE for the new TOF technology was performed with a support from RFBR grant # 99–02–18377.

References

[1] V. Akimov *et al.* Nucl. Instrum. Methods **A 344** (1994) 120.

[2] ALICE Collaboration. Technical Proposal, CERN/LHCC 95-71, 1995.

[3] V. Golovine, A. Smirnitski. Patent of Russia #2148283, priority of 13.11.1998.
A. Akindinov *et al.* Preprint ITEP 45-98, 1998.
A. Akindinov *et al.* Preprint ITEP 20-99, 1999.

[4] P. Fonte, A. Smirnitski, M. C. S. Williams. Nucl. Instrum. Methods **A 443** (2000) 201–204
A. Akindinov *et al.* Submitted to IEEE in 2000.

[5] V. V. Parkhomchuck *et al.* Nucl. Instrum. Methods **93** (1971) 269.

[6] E. Cerron-Zeballos *el.* Nucl. Instrum. Methods **A 374** (1996) 132–136.

[7] R. D'Alessandro *et al.* Preprint ITEP 51-95, 1995.

[8] A. Martemianov. Proc. of the 1st workshop on electronics for LHC experiments, Lisbon, 11-15 Sept., 1995.
A. Akindinov *et al.* Submitted to PTE in 2000.