IP/BBSR/94-10
March'94

A GPIB IEEE-488 based automated low temperature electrical resistivity measurement setup

S. B. Ota and K. K. Nanda

Institute of Physics, Sachivalaya Marg, Bhubaneswar - 751005

Fermilab Library
0 1160 0020983 7

Abstract:

A computer controlled low temperature (10-300K) four probe d.c. electrical resistivity measurement setup is described. This setup is built around a Leybold closed cycle refrigerator. The sample temperature is controlled to better than 1K using a Leybold model LTC60 temperature controller. The d.c. current is obtained from a Keithley model 224/2243 programmable current source and the voltage is measured using a Keithley model 182 sensitive digital voltmeter. The experimental setup is automated using GPIB IEEE-488 interface with a DMS model PCL-236 interface card installed in HCL 80386 based personal computer. The control software is written using MS-DOS GWBASIC. The temperature dependence of the forward voltage of a silicon diode measured using this setup is reported as an example.

Low temperature electrical resistivity measurement is often time consuming and routine measurements need automation. Here an automated low temperature electrical resistivity measurement setup is described(Fig.1). This is built around a Leybold closed cycle refrigerator[1]. This is a two-stage cryorefrigerator giving an ultimate temperature of about 10K. The temperature is determined using a type D silicon diode thermometer. This has a standard measurement accuracy of about 1%. The temperature of the sample site is controlled using the same silicon diode using a Leybold model LTC60 temperature controller(LTC 60 TC). The sample is fixed to the cold stage with GE7031 varnish. Cigarette paper fixed with GE7031 varnish provided the required electrical isolation. The electrical leads (insulated copper wires) are thermally anchored to the cold parts in order to reduce the stray thermal e.m.f. The usual four probe electrical connections are made to the sample. The d.c. current is obtained from a Keithley[2] model 224/2243 programmable current source(PCS) . The voltage is measured using a Keithley model 182 sensitive digital voltmeter(SDV).

The automation is achieved using the GPIB IEEE-488 interface. This interface has gained popularity because of its high data transfer rates upto 1megabyte/sec. The IEEE-488 bus was designed as a parallel data transfer medium to optimize data transfer without using an excessive number of bus lines. Since the bus is of parallel design, all devices connected to the bus have the same information available simultaneously. Generally, there are three categories that describe device operation. These designations include, controller, talker, listener. The GPIB instruments (LTC 60 TC, Keithley 224/2243 PCS and Keithley 182 SDV were connected in linear configuration. A HCL 80386 based personal computer[3] served as the controller. A Dynalog Micro-Systems model PCL-236 IEEE-488 interface card[4] was installed in the personal computer. The GWBASIC callable driver software is provided in EPROM on this interface board. The control software is written using MS-DOS GWBASIC. The flow chart of the control program is shown in Fig.2, which is self explanatory. A TVSE model LSP-100 dot matrix printer[5] is connected to the parallel port of the personal computer. The

following is an example program segment for the 182 SDV. This program sets the 182 SDV in autorange, reads a voltage value and displays it on the monitor.

```
10 DEF SEG=&HD000
20 DEVCLR%=15
30 REMOTE%=33
40 OUTPUT%=3
50 ENTER%=6
60 ADR%=7
70 CALL DEVCLR%(ADR%)
80 CALL REMOTE%(ADR%)
90 DST$="T1N1R0G0X"
100 CALL OUTPUT%(ADR%,DST$)
110 VOL$=SPACE$(15)
120 CALL ENTER%(ADR%,VOL$)
130 PRINT VOL$
140 END
```

In running the program for the resistivity measurement, the user has to specify the temperature range, current values, number of temperature values, the number of samples per data and the equilibration times. Upon specifying these parameters, the measurement is carried out until the maximum temperature is reached.

The temperature dependence of the forward voltage of a silicon diode measured using this setup is reported here as an example. The forward voltage of a semiconductor diode is known to increase by decreasing the temperature. This characteristic has therefore found application in the measurement of temperature. Semiconductor diode exclusively made for sensing temperature are now-a-days available commercially[6]. These sensors can provide accuracy of 50mK and costs several order of magnitude more than the diodes available for

general electronic application. The later can also be used for sensing temperature. 1N400 a silicon diode meant for general electronic application. The encapsulation of the 1N4007 ground flat on one side and fixed to the sample site with GE7031 varnish. The measurem was carried out from 10−300K using the above mentioned setup. The diode was forw biased with 1μA, 10μA and 100μA of current. This amount of current corresponds to a va below the knee in the V-I characteristic. Measurement was carried out in two sets one fr 10-27K in 1K step and the other from 30-300K in 30K step. Each data point was obtair by averaging 500 samples. This gave a typical temperature resolution of 0.1K and volta resolution of ~100μV. Fig.3 displays the temperature dependence of the forward voltage 1N4007 diode with 1μA, 10μA and 100μA of current.

This work is supported by DST project no.SBR-49.

References:

1) Leybold AG, Germany.

2) Keithley Instruments, U.S.A.

3) HCL, New Delhi.

4) Dynalog Micro Systems Pvt. Ltd., Bombay.

5) TVS Electronics Ltd., Bangalore.

6) For example, Lake Shore Cryotonics, Inc., U. S. A.

Figure Captions:

Fig.1: The automated low tempearture resistivity measurement setup.

Fig.2: Flow chart of the MS-DOS GWBASIC control program for the resistivity measuremen

Fig.3: The temperature dependence of the forward voltage of 1N4007 silicon diode for 1μ 10μA and 100μA of current.

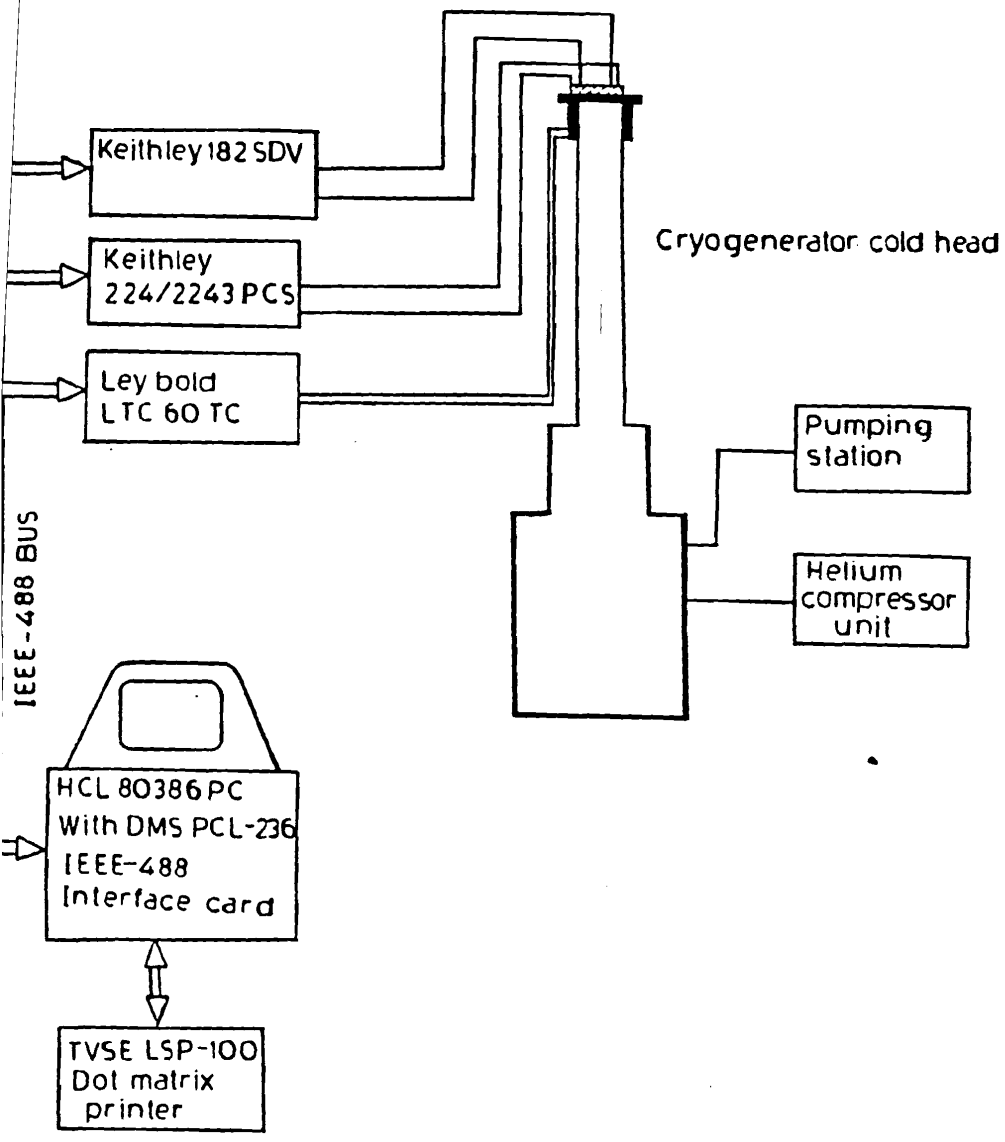
Keithley 182 SDV
Keithley 224/2243 PCS
Ley bold LTC 60 TC
Cryogenerator cold head
Pumping station
Helium compressor unit
IEEE-488 BUS
HCL 80386 PC With DMS PCL-236 IEEE-488 Interface card
TVSE LSP-100 Dot matrix printer

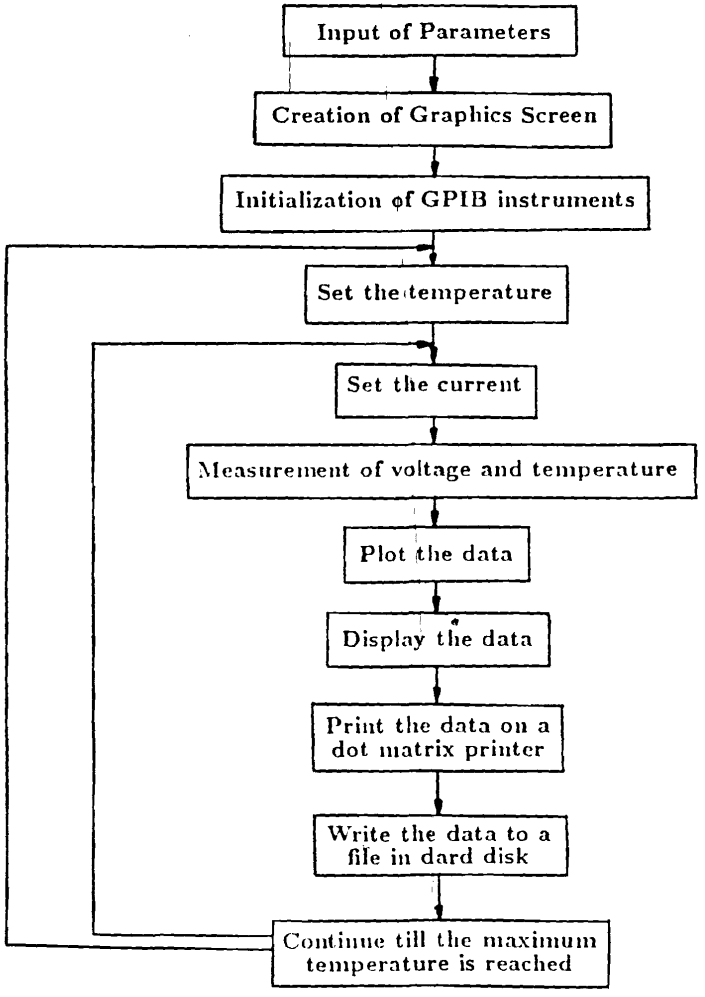
Input of Parameters
Creation of Graphics Screen
Initialization of GPIB instruments
Set the temperature
Set the current
Measurement of voltage and temperature
Plot the data
Display the data
Print the data on a dot matrix printer
Write the data to a file in dard disk
Continue till the maximum temperature is reached

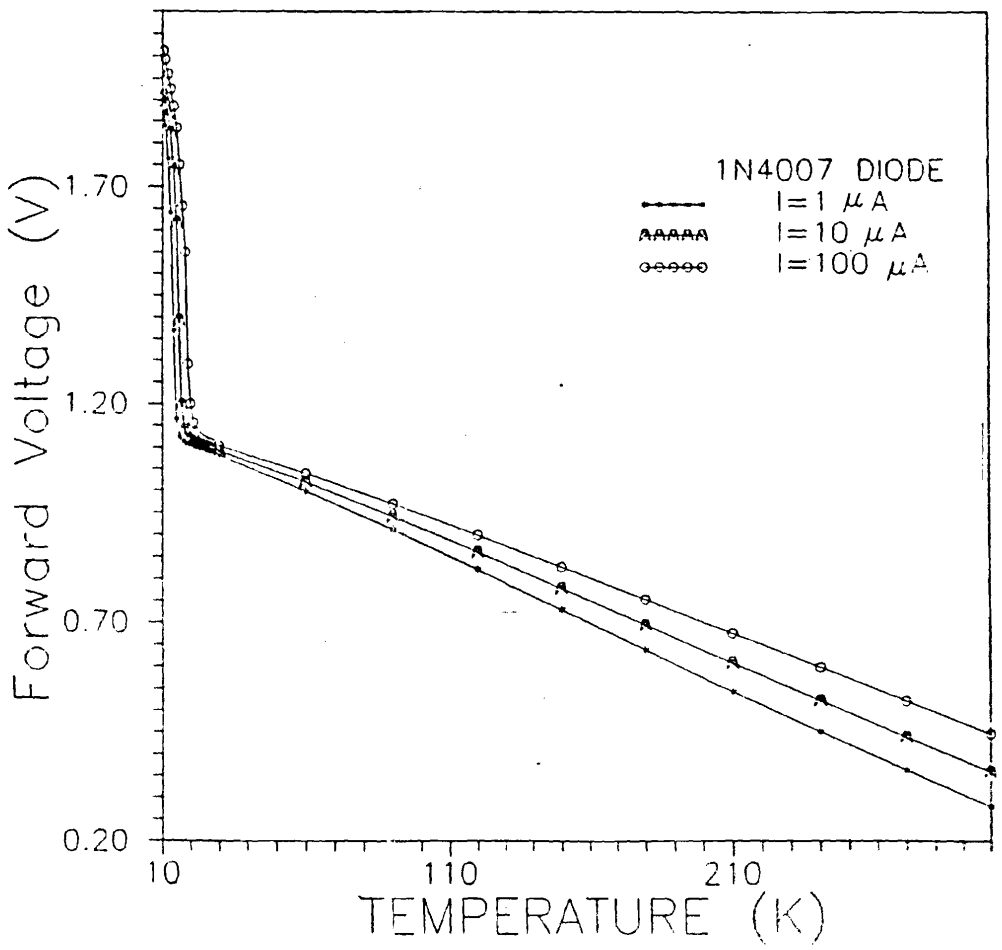
1N4007 DIODE
I=1 μA
I=10 μA
I=100 μA
Forward Voltage (V)
1.70
1.20
0.70
0.20
10
110
210
TEMPERATURE (K)