Fermilab Library
0 1160 0015290 4

IOA-273-92

IOA-273/92

FERMILAB
MAY 1992

ON THE POSSIBILITY OF A (3+1)-DIMENSIONAL ANYON IN THE PRESENCE OF GRAVITY

A.A.Kehagias and C.E.Vayonakis

Physics Department
University of Ioannina
GR 451 10 Ioannina , Greece

Abstract

We discuss the situation, frequently arisen in general relativity, in which the background spacetime is multiply connected. The associated gravitational Aharonov-Bohm effect can induce a small, but arbitrary phase factor turning a massive point particle into an anyon.

ROUTE TO
NAME LOCATION

It is by now well known that quantum mechanical systems in (2+1)-dimensions exhibit a variety of peculiar quantum mechanical phenomena related to the peculiar structure of the rotation, Lorentz and Poincaré groups in (2+1)-dimensions [1]. So, in planar physics there is the possibility that particles can carry arbitrary values of angular momentum exhibiting in that way fractional statistics [2]. This is essentially due to the abelian nature of the rotation group SO(2), which admits a continuum of unitary representations charactrerized by the eigenvalue j of its only generator J, the angular momentum operator. In contrast, in (3+1)-dimensions the rotation group SO(3) is non-abelian and its unitary representations are labelled by a discrete index, the integer or half-integer eigenvalue j of the angular momentum in that case. Upon rotation by an angle θ (around an axis taken orthogonal to the plane), the wave function ψ of a system with angular momentum j acquires a phase

$$e^{i\theta J}\,\psi = e^{i\theta j}\,\psi \tag{1}$$

In the former two space dimensional case a rotation by 2π does not leave invariant the wave function, whereas in the latter three space dimensional case a phase factor ± 1 arises.

The connection between spin and statistics can be understood from the properties of the many particle wave function. The wave function of an n-particle system $\psi\,(\,q_1\,,\,\ldots\,q_n\,)$, where q_i denotes collectively all quantum numbers characterizing the i-th particle, upon interchange of two particles may be chosen to satisfy the condition

$$\psi\,(\,\ldots q_i\,,\,\ldots\,q_j\,,\,\ldots) = e^{2\pi i s}\,\psi\,(\,\ldots q_j\,,\,\ldots q_i\,,\,\ldots) \tag{2}$$

where s is the "statistics" parameter. In familiar cases the phase factor is ± 1, corresponding respectively to bosons (e.g. s=0) and fermions (e.g. s=1/ 2). However, an arbitrary value of the phase factor arises if the statistics parameter s acquires other than integer or half-integer values, leading to a quantum system of particles with fractional statistics, i.e. anyons.

The spin-statistics theorem can be also understood from the topology of the many particle configuration space. The possibility of fractional statistics occurs in a quantum mechanical system , when the configuration space has non-contractable loops [3]. Let us consider [4] a single particle moving in a d-dimensional configuration space M^d. If the system contains n particles with positions $\mathbf{x}_i = (\,x_i^1\,,\,\ldots\,x_i^d\,)$, i=1,...n, the configuration space for the system is

$$M(d,n) = (M^d)^n - \{\mathbf{x}_1, \dots \mathbf{x}_n \; ; \; \mathbf{x}_i \neq \mathbf{x}_j \; ; \; i \neq j\} \tag{3}$$

Morover, if the system consists of indistinguishable particles, the relative configuration space is

$$Q(d,n) = M(d,n) / S_n \tag{4}$$

where S_n is the permutation group of n objects acting on M (d, n). The wave function of the system $\psi(x) = \psi(\mathbf{x}_1, \dots \mathbf{x}_n)$ is, in general, a multivalued function on Q (d, n). However, it is always singlevalued on $\tilde{Q}$ (d, n) , where $\tilde{Q}$ (d, n) is the universal covering space of Q(d, n) . This means that Q (d, n) and $\tilde{Q}$ (d, n) differ in their first homotopy (fundamental) group only : $\Pi_1(Q) \neq \Pi_1 = (\tilde{Q})\ \{0\}$ (it is of course possible that $Q = \tilde{Q}$, which corresponds to a simply connected space Q). General arguments [3] indicate that the wave function ψ satisfies the composition rule

$$\psi(\gamma\tilde{x}) = U(\gamma)\psi(\tilde{x}) \tag{5}$$

where $\tilde{x} \in \tilde{Q}(d,n)$, γ is an element of the fundamental group $\Pi_1(Q)$ and $U(\gamma)$ is a unitary representation of $\Pi_1(Q)$.

If M (d, n) is simply connected, then $\Pi_1(Q) = \Pi_0(S_n) = S_n$ as follows from the exact sequence between homotopy groups [5]

$$\Pi_1(M(d,n)) = 0 \rightarrow \Pi_1(Q) \rightarrow \Pi_0(S_n) \rightarrow 0 \tag{6}$$

For $d \geq 3$ it is in fact $\Pi_1(Q) = S_n$. If then $P \in S_n$ denotes a permutation, the unitary representations of $\Pi_1(Q)$ are either

$$U(P) = (-1)^P = \pm 1 \quad \text{according to an even or odd permutation} \tag{7.a}$$

or

$$U(P) = +1 \qquad \text{for all } P \tag{7.b}$$

It is now clear from (5) that ψ carries a representation of $\Pi_1(Q)$ and, thus, for the configuration space under consideration the particles can either be fermions (7.a) or bosons (7.b). This is the usual case. For d=2, however, it is $\Pi_1(Q) = B_n$, the braid

group of n objects, which, because the space of periodic trajectories has an infinite number of distinct one-dimensional representations, can be parametrized by a continuous statistics parameter s (defined modulo 1). For s=0 or 1/ 2 we again obtain bosons or fermions, but for other values of s we have a quantum system of particles with fractional statistics, i.e. anyons. This precisely corresponds to the infinitely connected space of periodic trajectories there.

So far, little attention has been paid to multiply connected spaces for $d \geq 3$. However, as we will argue below, in general relativity there can easily exist configuration spaces, which can be multiply connected. In that case, instead of (6) the sequence between homotopy groups is

$$0 \rightarrow \Pi_1 (M(d,n) \rightarrow \Pi_1(Q) \rightarrow \Pi_0(S_n) \rightarrow 0 \qquad (8)$$

and thus $\Pi_1(Q) \neq S_n$. As a result, there is room in general relativity for particles which are neither bosons nor fermions, but can obey a generalization of the usual spin-statistics connection, where a statistics factor $e^{i(\text{phase})}$ implies spin equal to (phase)/ 2π.

An important figure of anyon systems is that they generically violate parity and time-reversal invariance. This is due to the fact that either a P or a T transformation reverses the sign of the relative phase between two trajectories. Thus, a system of anyons with statistics phase θ is transformed into a system with statistics phase $-\theta$ and this is inequivalent except for $\theta = 0$ or π (bosons or fermions).

The most interesting dynamical mechanism up to now in which fractional statistics arises is through the coupling of point particles to electrodynamics with a Chern-Simons action [6]. The fractional statistics is then explained by a two-dimensional Aharonov-Bohm effect. Such a model of dynamically realized anyons in $d = 2$ dimensions is now thought to play a role in high T_c superconductivity [7]. Coming to gravity, it has been discovered [8] that gravitational anyons in $d = 2$ dimensions arise by coupling massive point particles to topologically massive gravity [9], where a topological gravitational Chern-Simons term is added to the usual Einstein action. Moreover, the spin and statistics connection has been calculated [10] in the same framework. Actually, a massive point particle with spin in Einstein gravity gives rise to the same asymptotic gravitational field as a massive spinless point particle in topological massive gravity [8,11], something which suggests that the same mechanism which makes massive point particles have fractional statistics in topologically massive gravity should induce fractional statistics for massive spinning particles in Einstein gravity. The same issues were

subsequently [12] clarified in the context of the Chern-Simons-Witten formulation of (2+1)-dimensional Einstein gravity, where the Einstein action is replaced by an equivalent ISO(2,1) Chern-Simons action and gravity is thus reexpressed as an ISO(2,1) gauge theory. There is also another construction of a gravitational anyon [13] without Chern-Simons interaction .

The gravitational Aharonov-Bohm effect [14] arises from considering the quantum mechanics of a gravitating point particle in a gravitational field and appears to induce a phase to a massive point particle turning it into an anyon. This is by no means restricted to d = 2 space dimension. It is our purpose here to present a d = 3 situation , which precisely realizes the appropriate topology we have previously presented for having an anyonic system. The gravitational field contribution to the total angular momentum will induce a fractional spin, a gravitational analog of previous discoveries [15].

Let us consider a test point particle moving in an arbitrary gravitational background . The best way to understand the relationship between the quantum Aharonov-Bohm effect and gravity is through the lagrangian formulation for a nonrelativistic test particle in a weak gravitational field. The equations of motion are derived from the action

$$S = -mc\int ds = \int L\,dt \tag{9}$$

where $ds = (-g_{\mu\nu}\ dx^{\mu}\ dx^{\nu})^{1/2}$ is the length of a line element and $L = -mc\frac{ds}{dt}$ is the lagrangian. In the limit of a weak gravitational field $g_{\mu\nu} = \eta_{\mu\nu} + h_{\mu\nu}$ and small velocities , the lagrangian is given by

$$L = \frac{1}{2}m\dot{x}^2 + mch_{o\alpha}\dot{x}^{\alpha} + \frac{1}{2}mc^2h_{oo} \tag{10}$$

where $\dot{x}^2 = \dot{x}^{\alpha}\ \dot{x}^{\beta}\ \delta_{\alpha\beta}$, $\dot{x}^{\alpha} = \frac{dx^{\alpha}}{dt}$, $\alpha,\beta=1,2,3$. The canonical momentum p is

$$p_{\alpha} = \frac{\partial L}{\partial \dot{x}^{\alpha}} = m\dot{x}_{\alpha} + mch_{o\alpha} \tag{11}$$

and the hamiltonian of the system is [16]

$$H = \frac{1}{2m}(p_{\alpha} - mch_{o\alpha})^2 - \frac{1}{2}mc^2h_{oo} \tag{12}$$

The mechanical angular momentum $\mathbf{l}_m$ is

$$l_m = \mathbf{r} \times m\dot{\mathbf{r}}, \ (\mathbf{r} = (x_1, x_2, x_3), \ \dot{\mathbf{r}} = (\dot{x}_1, \dot{x}_2, \dot{x}_3)) \tag{13}$$

while the canonical angular momentum is given by

$$l_c = \mathbf{r} \times \mathbf{p}, \ (\mathbf{p} = (p_1, p_2, p_3)) \tag{14}$$

From (11) it becomes clear that there exists a difference between the two types of angular momentum equal to

$$l_c - l_m = \mathbf{r} \times mc\mathbf{h}_o, \ (\mathbf{h}_o = (h_{o1}, h_{o2}, h_{o3})) \tag{15}$$

The difference between the canonical and the mechanical angular momentum is of course due to the fact that the gravitational field carries its own angular momentum. It should be noted that $h_{o\alpha}$ is not uniquely determined . Under a diffeomorphism $x_\mu \rightarrow x'_\mu = x_\mu + \varepsilon\xi_\mu$ generated by $\xi_\mu = (\xi_o, \boldsymbol{\xi})$, h_{oa} is transformed as [17]

$$h_{o\alpha} \rightarrow h'_{o\alpha} = h_{o\alpha} + \varepsilon\xi_{o,\alpha} \tag{16}$$

The wave function $\psi(x)$ of the system satisfies the equation

$$H\,\psi(x) = E\,\psi(x) \tag{17}$$

We may write $\psi(x)$ as

$$\psi(x) = \left\{ \exp\left(i \frac{mc}{\hbar} \int_\gamma^x h_{o\alpha}(x')\, dx'^\alpha\right) \right\} \psi_o(x) \tag{18}$$

where the integral is taken along a path γ with end point x and $\psi_o(x)$ satisfies the equation

$$H_o\ \psi_o(x) = \left(\frac{1}{2m} p^2 - \frac{1}{2} mc^2 h_{oo}(x)\right)\psi_o(x) \tag{19}$$

The above equation is the equation for a nonrelativistic particle moving in a potential $V(x) = -\frac{1}{2} mc^2 h_{oo}(x)$. Thus, $\psi_o(x)$ will be single-valued . As a result, $\psi(x)$

as follows from (5) will be multivalued and under a round trip in a closed path γ it will acquire a phase factor

$$\exp\left(i \frac{mc}{\hbar} \oint_\gamma h_{o\alpha}\, dx^\alpha \right) \tag{20}$$

which will correspond to a unitary representation

$$U(\gamma) = \exp\left(i \frac{mc}{\hbar} \oint_\gamma h_{o\alpha}\, dx^\alpha \right) \tag{21}$$

The integral $\oint_\gamma h_{o\alpha}\, dx^\alpha$ above is identically zero if $h_{o\alpha}dx^\alpha$ is an exact form. This corresponds to a static spacetime. For a stationary one, however, $h_{o\alpha}dx^\alpha$ is not exact. Of course, using the gauge freedom as expressed in (16), one may switch off $h_{o\alpha}$ so that $h_{o\alpha}' = \varepsilon\xi_{o,\alpha}$ will correspond to an exact form. However, this is a local expression and cannot be valid everywhere in the manifold. As a result, we expect a different than zero phase for a stationary spacetime. In the following we will illustrate the above discussion exactly for such a case.

Let us consider a stationary axially symmetric spacetime with energy momentum tensor of the form

$$T_{\mu\nu} = \mu\, u_\mu\, u_\nu \tag{22}$$

where the energy density is given by

$$\mu = \mu_o\, \delta(\varrho - a) \tag{23}$$

As a result, the energy flows around a cylinder of radius a with velocity

$$u_\mu = (c\,, \mathbf{u})\,, \quad \mathbf{u} = u\, \hat{\phi} \tag{24}$$

(see fig.1). In the weak field (linear) approximation and in the limit of small velocities, the components of the energy momentum tensor can be read [18]

$$\begin{aligned} T_{00} &= \mu c^2\,, \; T_{11} = T_{22} = T_{33} = 0 \\ T_{01} &= \mu c u_1 = -\mu c u \sin\varphi \\ T_{02} &= \mu c u_2 = \mu c u \cos\varphi \end{aligned} \tag{25}$$

In the approximation we consider here, the field equations reduce to

$$\nabla^2 h_{o\alpha} = -\frac{16\pi G}{c^4} T_{o\alpha} \tag{26}$$

$$\nabla^2 h_{oo} = -\frac{8\pi G}{c^4} T_{oo} \tag{27}$$

where, in order to remove the freedom of making diffeomorphisms, the gauge condition $\nabla . \mathbf{h}_o = 0$ has been imposed. Employing the boundary conditions

$$(\nabla h_{\mu\nu}(<) - \nabla h_{\mu\nu}(>)) \cdot \hat{\mathbf{n}} \,|_s = -\frac{16\pi G}{c^4} t_{\mu\nu} \tag{28}$$

for the in (<) and out(>) of the cylinder solutions ($t_{\mu\nu}$ is the energy momentum tensor on the surface S of the cylinder), the equations (26,27) are solved by

$$h_{o\alpha}\ (<) = \frac{16\pi G}{c^3} \mu_o u\ \varepsilon_{\alpha\beta}\, x^\beta = \frac{8G}{c^3} \frac{J^3}{a^2}\ \varepsilon_{\alpha\beta} x^\beta \tag{29}$$

$$h_{o\alpha}\ (>) = \frac{16\pi G}{c^3} \mu_o u\ a^2\, \varepsilon_{\alpha\beta} \frac{x^\beta}{\varrho^2} = \frac{8G}{c^3}\ J^3\ \varepsilon_{\alpha\beta} \frac{x^\beta}{\varrho^2} \tag{30}$$

$$h_{oo}\ (<) = \text{const.} \tag{31}$$

$$h_{oo}\ (>) = -\frac{8\pi G}{c^2} \mu_o\, a \ln \frac{\varrho}{a} + \text{const} \tag{32}$$

J^3 is the angular momentum density along the x_3-axis as measured at spatial infinity and it is given by

$$J^3 = \frac{1}{c} \int_S (x^1 T^{o2} - x^2 T^{o1}) dS \tag{33}$$

Let us now investigate the motion of a test particle in the above space. The configuration space is R^3/D, if the particle cannot penetrate the region D. Since R^3/D is multiply connected, one may expect particles which are neither bosons nor fermions, but can obey a generalized spin-statistics connection, as we have discussed at the beginning. According to that general treatment, the phase factor acquired by the wave function $\psi(x)$ will be

$$e^{i\theta} = \exp(i \frac{mc}{\hbar} \frac{8G}{c^3} J^3 2\pi n) \tag{34}$$

It should be noted that the phase θ is a very small quantity due to the presence of Newton' s constant G.

Moreover, as we have already pointed out, a necessary condition for obtaining a phase θ different than 0 or 2π is P and/ or T non-invariance. In our case, this P or T non-invariance comes from the dipole structure of the energy momentum tensor ($T_{\mu\nu}$ is not invariant under the substitution $\varphi \rightarrow -\varphi$). As a result, the solutions (29-32) correspond to a stationary spacetime, which necessarily is not P or T invariant.

There is a non-gravitational analog to the above discussion, namely cyons [19], which also exist in 3+1 dimensions and make the properties of anyons much more intuitive. A cyon is a composite object of a charged particle orbiting around an infinitely thin, infinitely long solenoid (magnetic flux tube). For a winding angle φ there is an Aharonov-Bohm phase induced in the wave function [2]

$$\psi' (\varphi) = e^{iq\Phi \varphi/2\pi} \psi (\varphi) \tag{35}$$

where q is the charge and Φ is the flux. These phases can simulate fractional statistics and the field contribution to the total angular momentum can simulate fractional spin [15]. The two types of angular momentum relevant to the discussion of the cyons are the mechanical and the canonical one. The total angular momentum is equal to the canonical angular momentum and this is always inegral [19]. It is divided into the piece of mechanical angular momentum localized near the cyon which is fractional [2] and a piece located at spatial infinity which is also fractional, thus providing a consistent point of view [21]. Actually, the difference between the canonical and the mechanical angular momentum is that contained in the electromagnetic field.

Here, we have an analogous situation.The difference between the canonical and the mechanical angular momentum is given by the expression (15) and , in the specific example we have considered, $\mathbf{h}_0$ is given by the expressions (29,30).The difference is precisely the angular momentum carried by the gravitational field to spatial infinity.

Of course, according to the representation theory of the Poincaré group [22],we have unitary representations which correspond either to massive particles with discrete values of spin s=0,1,2,..., or to massless particles with s=0,1/ 2, 1,..., or to massless particles with continuous spin, which however seem not to be realized in nature. What we contemplate here is a physical picture in which , due to gravity,

we have a very small violation of Poincaré invariance by an amount, which is reflected in the very small phase θ of equation (34). If a generalized spin-statistics connection is really valid [2,10],this corresponds to a very small departure from discrete values of spin even for massive point particles. We should underline the local character of this effect and the role played by the asymptotic region (large distances).

There is a limitation in all these due to the used linearized approximation to gravity. It is an open problem if these results will survive a transition to the full, non-linear generization of our (and any other similar) gravitational model, where self-field effects will be important. It is also an open problem to discuss the quantum field theory with fractional spin and statistics [23] in a gravitational background [24], as well as to find interesting cosmological implications of anyonic systems.

Acknowledgement. This research has been started while we were visiting CERN Theory Division, which we would like to thank for its kind hospitality. We also thank Dr. N.E. Mavromatos for a useful discussion and the Greek Ministry of Research and Technology for support.

REFERENCES

[1] R.Jackiw, Five lectures on planar gravity, in SILARG VII Cocoyoc, Mexico 1990, preprint MIT-CTP-1936(1991); Update on planar gravity, in Sixth Marcell Grossmann Meeting, Kyoto, Japan 1991, preprint MIT-CTP-1986(1991).

[2] F.Wilczek, Phys. Rev. Lett. 48(1982)1144; ibid 49(1982)957.

[3] J.M.Leinaas and J.Myrheim, Nuovo Cimento B73(1977)1;
J.A.Goldin, R.Menikoff and D.H.Sharp, J. Math. Phys. 22(1981)1664; Phys. Rev. Lett. 51(1983)2246; ibid 54(1985)603;
Y.S.Wu, Phys. Rev. Lett. 52(1984)2103.

[4] M.G.G.Laidlaw and C.M.de Witt, Phys. Rev. D3(1971)1375.

[5] N.Steenrod, The topology of fibre bundles (Princeton Univ. Press,1951).

[6] F.Wilczek, Lectures on fractional statistics and anyon superconductivity, in Proc. Ferrara Summer School 1989, ed. M.Bregola (Bibliopolis, Naples).

[7] J.D.Lykken, J.Sonnenscheim and N.Weiss, Int. J. Mod. Phys. A6(1991)5155.

[8] S.Deser, Phys. Rev. Lett. 64(1990)611.

[9] S.Deser, R.Jackiw and S.Templeton, Ann. Phys. (N.Y.)140(1982)372; (E) 195(1988)406.

[10] S.Deser and J.G.McCarthy, Nucl. Phys.B344(1990)747.

[11] S.Deser, R.Jackiw and G.'t Hooft, Ann. Phys. (N.Y.)152(1984)220.

[12] M.E.Ortiz, Nucl. Phys. B363(1991)185.

[13] Y.M.Cho, D.H.Park and C.G.Han, Phys. Rev. D43(1991)1421.

[14] J.S.Dowker, Nuovo Cimento B52(1967)1;
G.Papini, Nuovo Cimento B52(1967)136;
J.K.Lawrence, D.Leiter and G.Szamozi, Nuovo Cimento B17(1973)113;
N.A.Batakis, Phys. Lett. B148(1984)51;
A.Zee, Phys. Rev. Lett. 55(1985);
P.O.Mazur, Phys. Rev. Lett. 57(1986)929; ibid 59 (1987)2379,2380.

[15] M.B.Paranjape, Phys. Rev. Lett. 55(1985)2390; ibid 57(1986)500;
L.S.Brown, Phys. Rev. Lett. 57(1986)499;
D.Boyanovsky,R.Blankenbeclk and R.Yahalon,Nucl.Phys.B270[FS16](1986)483;
R.Blankenbeclker and D.Boyanovsky, Phys. Rev. D34(1986)612;
A.P.Polychronakos, Nucl. Phys. B278(1986)207;
M.B.Paranjape, Phys. Rev. D36(1987)3766.

[16] B.De Witt, Phys. Rev. Lett. 16(1966)1092.

[17] L.D.Landau and E.M.Lifshitz, The Cassical Theory of Fields(Pergamon Press, 1975).

[18] A.Papapetrou, Lectures on general relativity (D. Reidel Publishing Company, Holland, 1974).

[19] A.S.Goldhaber, Phys. Rev. Lett. 50(1983)905.

[20] R.Jackiw and A.N.Redlich, Phys.Rev. Lett.50(1983)555.

[21] A.S.Goldhaber and R.Mackenzie, Phys. Lett. B214(1988)471.

[22] P.Ramond, Field theory: A modern primer (Addison Wesley,1989).

[23] S.Forte, Quantum mechanics and field theory with fractional spin and statistics, Saclay preprint SPT/ 90-180, Rev. Mod. Phys. (to be published).

[24] N.D.Birrel and P.C.W.Davies, Quantum fields in curved space(Cambridge Univ. Press,1986).

FIGURE CAPTION

Fig. 1 A stationary axially symmetric spacetime.

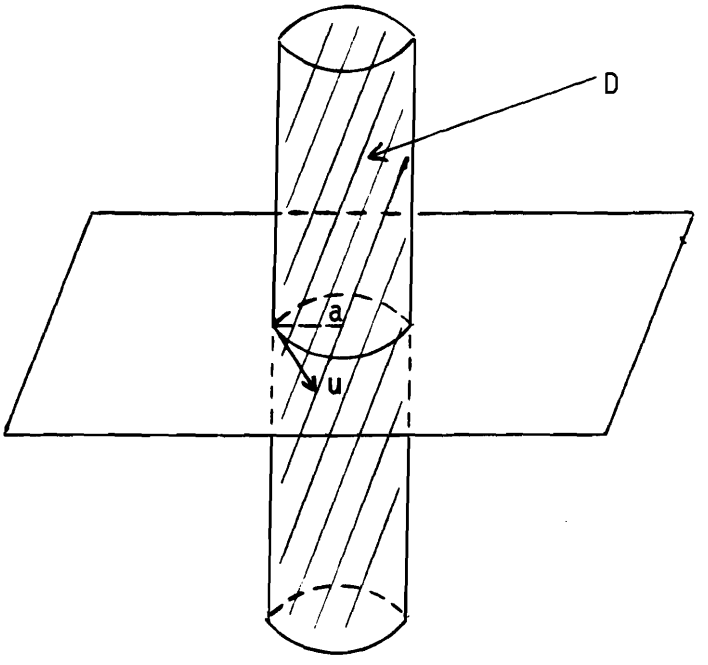

Fig. 1