8

FEDERAL SCIENCE CENTRE

INSTITUTE FOR HIGH ENERGY PHYSICS

IFVE-94-142

Fermilab Library 0 1160 0049076 7

IHEP 94-142

FERMILAB

OCT

LIBRARY

N.G.Minaev

γ/π^0 SEPARATION IN SHOWER MAXIMUM DETECTOR USING NEURAL NETWORK ALGORITHM

Protvino 1994

UDK 539.1.074 M–24

Abstract

Minaev N.G. γ/π^0 separation in shower maximum detector using neural network algorithm : IHEP Preprint 94-142. – Protvino, 1994. – p. 8, figs. 9, refs.: 10.

Procedures of γ/π^0 separation based on a multilayered perceptron algorithm are suggested. Recognition capacities of these procedures and one of the CDF separation methods have been examined. The procedures were tested with the simulated data from one $EMC + SMD$ tower of the $STAR$ experiment.

Аннотация

Минаев Н.Г. Разделение γ/π^0 в детекторе максимума ливня с применением алгоритма нейронной сети: Препринт ИФВЭ 94-142. – Протвино, 1994. – 8 с., 9 рис., библиогр.: 10.

Предложены процедуры разделения γ/π^0, основанные на алгоритме многослойного перцептрона. Проведено исследование способности распознавания этих процедур и одного из методов CDF. Процедуры разделения тестировались на смоделированных данных с одной башни $EMC + SMD$ установки $STAR$.

© Federal Science Centre
Institute for High Energy Physics, 1994.

Introduction

When reconstructing direct photon spectra, a problem, how to separate single photons from those produced by decays of hadrons such as π^0 mesons, arises. Methods of γ/π^0 separation crucially depend on the characteristics of devices adapted for photon detection [1]. Here we consider possibilities of the γ/π^0 separation in the $STAR$ experiment [2] applying some kinds of separation procedures.

A proposed $STAR$ setup to detect photons incorporates an electromagnetic calorimeter (EMC) equipped with shower maximum detector (SMD) [3]. The EMC includes barrel and endcap parts. The barrel EMC is a lead-scintillator sampling calorimeter segmented into 1200 towers.

In this paper the procedures of γ/π^0 separation by applying neural network algorithm are suggested. A CDF separation procedure is considered as well. In order to study and compare the separation procedures, electromagnetic showers of single photons and π^0's simulated in one tower of the barrel EMC were only implemented. The features of the barrel EMC tower and the SMD part embedded into this tower are described below.

1. Simulation procedure

To simulate electromagnetic showers in one barrel EMC tower the $GEANT$ package [4] and subroutines forming a response of the SMD to the electromagnetic shower have been adapted. The γ or π^0 event output has the following quantities: E is the energy deposited in the tower of EMC, A_i are amplitudes from strips and wires of SMD.

The layout of the tower and sizes used in simulation are shown in Fig.1. The SMD is a gas multiwire proportional chamber provided with wire and strip readouts to obtain a transverse shape of the electromagnetic shower for both X and Y coordinates.

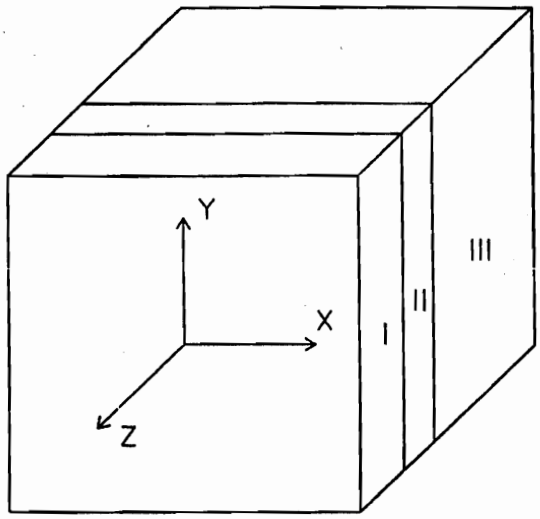

Fig. 1. Geometry of the EMC tower equipped by SMD: XY transverse section – 24×24 cm^2; I – 20 mm SCl + 20 mm Al + 4 (5 mm Pb + 5 mm SCl); II — SMD; III – 16 (5 mm Pb + 5 mm SCl).

The SMD construction is similar to CES in CDF experiment [5]. The wire and strip pitches are equal to 7 mm. Wires are located in the center of aluminium channels of 6x6 mm^2 transverse size and 1 mm wall thickness.

A quality of simulation routine was tested by experimental and simulated data comparison for 26 GeV electrons. The experimental data were obtained by $IHEP\ STAR/EMC$ group [6] using the proportional chamber filled with Argon bearing about 30% of CO_2. The energy resolution $\sigma_{E_{SMD}}/E_{SMD}$ was found to be precisely the same value as that in the experiment, and the simulated shape of the shower profile is closely matched by the experimental one (Fig.2).

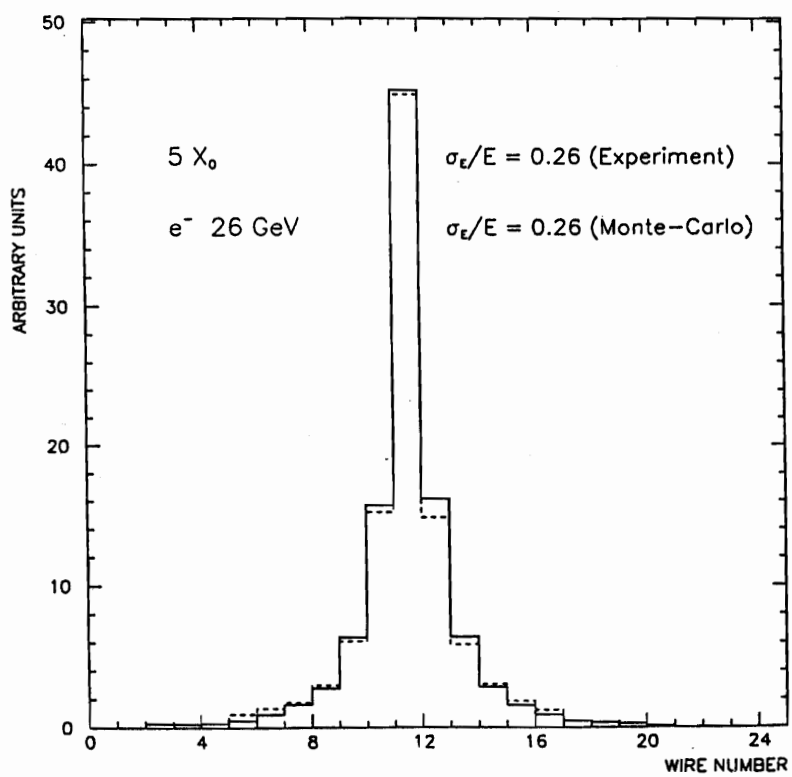

Fig. 2. Simulated (solid) and experimental (dashed) shower profiles for wire plane of SMD.

To examine different γ/π^0 separation methods the samples of data for 6 energies were generated: 10, 15, 20, 26, 30, and 40 GeV both for γ's and π^0's. The spacing between the source of π^0's decayed into 2γ and the tower front surface is determined by the tower disposition over the interaction point. The shortest distance of 220 cm and only the symmetric decays of the π^0's have been chosen, so that to create more rigid conditions for the π^0 recognition. The number of computed events for each sample was equal to 2000.

2. Methods of γ/π^0 separation

With samples of photon and π^0 candidates, we can estimate a genuine number of γ's and π^0's. For this goal one should solve the following equation:

$$\begin{pmatrix} N_\gamma^C \\ N_{\pi^0}^C \end{pmatrix} = \begin{pmatrix} \epsilon_\gamma & 1-\epsilon_{\pi^0} \\ 1-\epsilon_\gamma & \epsilon_{\pi^0} \end{pmatrix} \begin{pmatrix} N_\gamma \\ N_{\pi^0} \end{pmatrix}, \tag{1}$$

where N's with the upper index are the numbers of γ and π^0 candidates, whereas N's without the upper index signify the genuine number of γ's and π^0's. The $\epsilon_{\gamma(\pi^0)}$ is an efficiency of the true recognition (a fraction of correctly recognized events) for $\gamma(\pi^0)$. To evaluate the efficiencies $\epsilon_{\gamma(\pi^0)}$ only a Monte Carlo study is operable.

In order to split a sample of events into two classes of candidates it is necessary to use a decision rule, which assigns every event to the photon candidate or to the π^0 candidate. Having applied such a decision rule, we obtain the samples of γ and π^0 candidates. Below we shall use the overdetermined meaning of the ϵ_{π^0}: $\epsilon_{\pi^0} = 1 - \epsilon_{\pi^0}$, now ϵ_{π^0} is an efficiency of a false recognition for π^0's.

Let us consider the concrete methods of the γ/π^0 separation.

2.1. CDF method

Here we have to deal only with one of the CDF separation methods that is called "transverse shower profile method" [7]. The decision rule for this method is the following:

$$\chi^2 < 4 \rightarrow \gamma, \qquad \chi^2 > 4 \rightarrow \pi^0. \tag{2}$$

It means that 4 is a threshold and if χ^2 is less than the threshold then an event will be classified as a photon otherwise as π^0. The χ^2 is defined by expressions

$$\chi^2 = \frac{\chi_S^2 + \chi_W^2}{2}, \qquad \chi_{S(W)}^2 = \sum (p_i - y_i)^2/\sigma_i^2, \tag{3}$$

$$p_i = \frac{A_i}{\sum A_i}, \qquad \sigma_i^2 = 4(10/E)^\alpha \widehat{\sigma}_i^2, \tag{4}$$

where $\chi_{S(W)}^2$ are the individual contributions from strips (wires) and $\widehat{\sigma}_i^2$ denote dispersions determined from p_i distributions. The p_i are normalized strip (wire) amplitudes and y_i are the expected amplitudes of the shower profile for the single photons. The tower energy deposit E is measured in GeV, and the value of $\alpha = 0.27$ was chosen for ϵ_γ to be approximately 0.8 for all energies.

Under χ^2 estimation a shower fit is performed over 11 wires and 11 strips (a window placed around a maximum amplitude of the shower). Fig.3 demonstrates the χ^2

distributions for single photons and π_0's at the energy of 30 GeV. The enhancement of energy leads to a greater distributions overlapping thus increasing the number of false recognized π_0's.

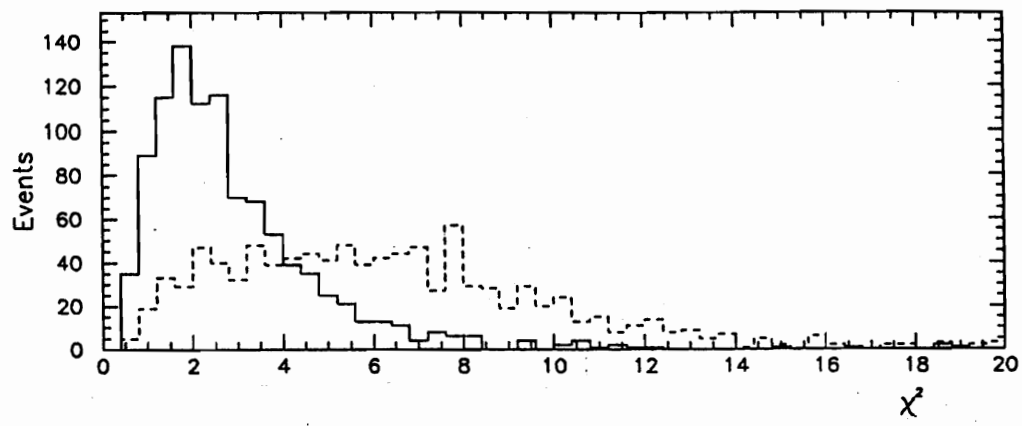

Fig. 3. χ^2 distribution for 30 GeV photons (solid) and π^o's (dashed).

2.2. Methods with application of neural network algorithm

In general terms, neural networks are represented as data processing architectures composed of the large number of interconnected functional units named neurons.

Neural network algorithms are widely employed in high energy physics (see, for example, [8],[9]). A multilayered perceptron (MLP) will suffice for our purposes. The multilayered perceptron incorporates one input layer, several hidden layers of neurons, and one output layer of neurons. The MLP architecture applied to the present γ/π^0 separation is shown in Fig.4. The output o_i of each neuron is obtained by sigmoid function acting on the weighted sum of its inputs inp_j:

$$o_i = f(\sum w_{ij} inp_j), \quad f(x) = 0.5(1 + tanh(x)). \tag{5}$$

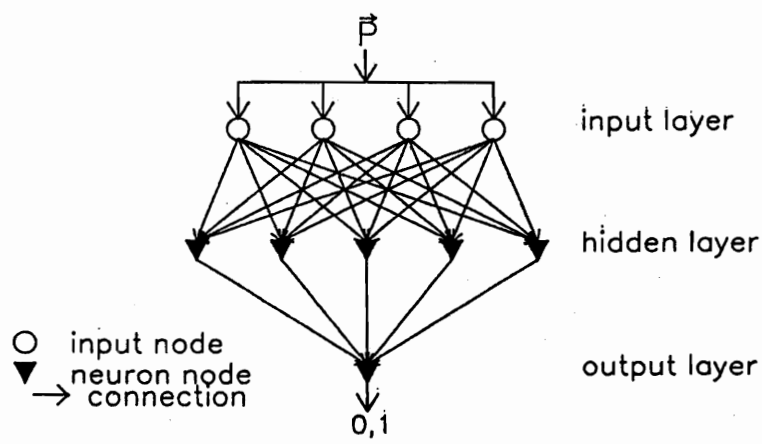

Fig. 4. Scheme of MLP neutral network.

The vector $\vec{P}$ is a coded pattern of the event which must be classified by neural network. When operating the network evaluates a class number for the input pattern : 0 for the

γ and 1 for the π_0. The dimension N of the vector $\vec{P}$ is equal to the number of nodes in the input layer. There are $2N+1$ nodes in the hidden layer and one node in the output layer.

Now we draw our attention to the input patterns represented by vectors $\vec{P}_l$. Two types of the input vectors are used

$$\vec{P}_1 = (E, D_C, M_2, M_3, M_4), \quad \vec{P}_2 = (E, D_C, M_2, M_3, M_4, \chi^2).$$

It means that two types of MLP architectures with different numbers of neurons have been used. We shall refer to the neural network with the input vector $\vec{P}_1$ as P_1 and the other network as P_2.

The components of the vectors $\vec{P}_l$ are defined as

$$D_C = \mid \mu_{1S} - max_S \mid + \mid \mu_{1W} - max_W \mid, \tag{6}$$

$$M_k = \mid M_{kS} \mid^{1/k} + \mid M_{kW} \mid^{1/k}, \tag{7}$$

where $\mu_{1S(W)}$ is the center of gravity of the strip (wire) amplitudes whereas $max_{S(W)}$ is an estimate of the shower profile maximum position. The $M_{kS(W)}$ are the moments about $max_S(W)$ for the strip (wire) signals. Finally, χ^2 and the energy deposit E are the same as in the CDF method.

For the strip plane the quantities μ_{1S}, max_S, and M_{kS} are given by

$$\mu_{1S} = \frac{\sum x_j A_j}{\sum A_j}, \qquad max_S = \frac{\sum_{i=-1}^{1} x_{m+i} A_{m+i}}{\sum_{i=-1}^{1} A_{m+i}}, \tag{8}$$

$$M_{kS} = \frac{\sum (x_j - max_S)^k A_j}{\sum A_j}, \tag{9}$$

where x_j is the coordinate of the center of the strip with the amplitude A_j. The A_m is a maximal amplitude of the shower, and x_m is the coordinate of the center of the strip with this amplitude.

For the wire plane the quantities with the W subscript are written analogously.

The D_C points to asymmetries about $max_{S(W)}$ for the strip (wire) shower profiles as the M_3 does. The D_C,M_2, and M_3 distributions for single photons and π^0's at the energy of 30 GeV are shown in Fig.5,6 and 7. The behaviour of these distributions with augmented energy is the same as for the χ^2 distributions.

Neural networks were trained by backpropagation algorithm. The training consisted in modifying the weights w_{ij} in response to its action on given input vectors from γ and π^0 training samples. This was made by applying the $FORTRAN$ subroutine package $JETNET$2.0 [10]. The training quality was checked using test patterns not included in the training samples.

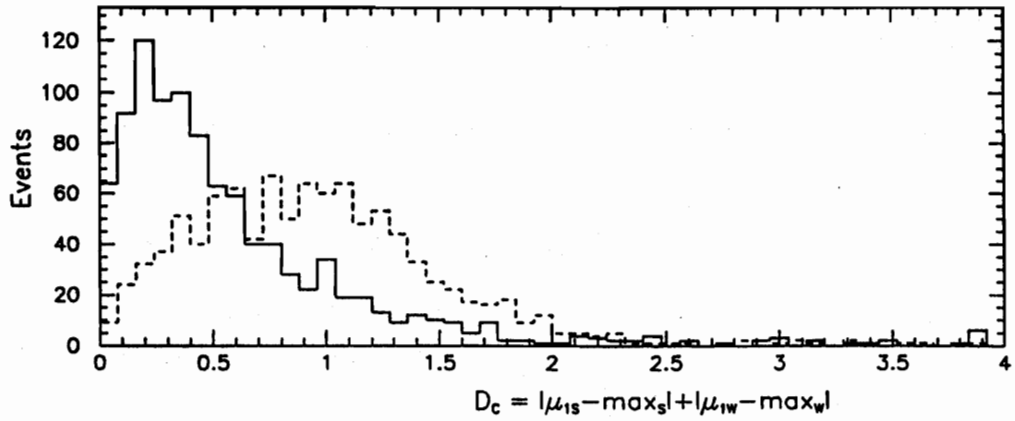

Fig. 5. D_c distribution for 30 GeV photons (solid) and π^o's (dashed).

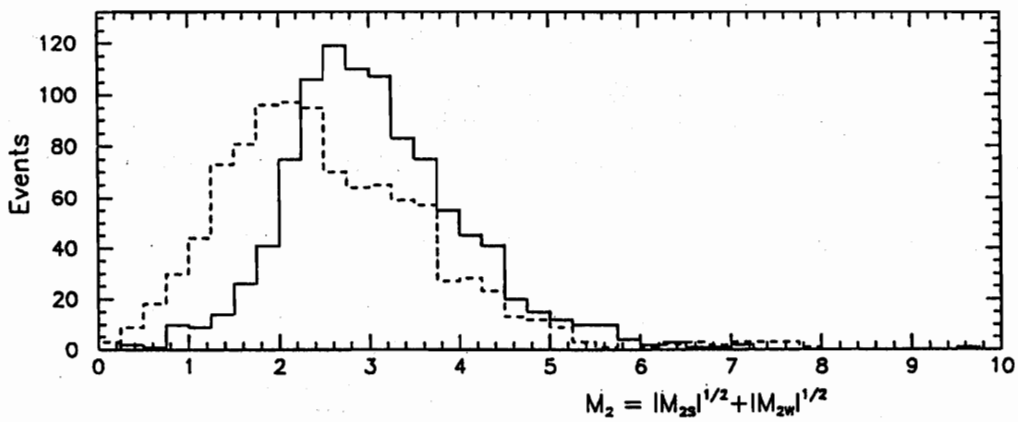

Fig. 6. M_3 distribution for 30 GeV photons (dashed) and π^o's (solid).

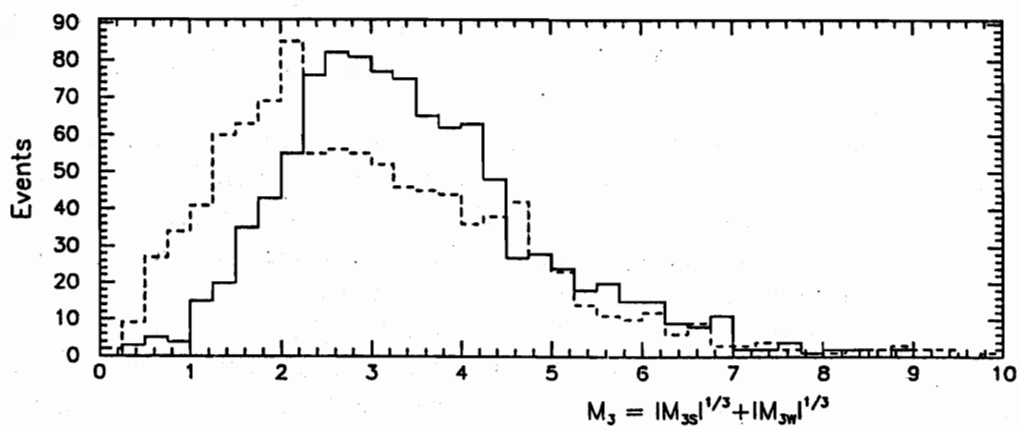

Fig. 7. M_3 distribution for 30 GeV photons (dashed) and π^o's (solid).

2.3. Results

To estimate the efficiencies of recognition γ and π^0 samples with the equal number of events(1000) have been employed.

A comparison between the CDF separation procedure and the one which exploits $D_C < T(E)$ decision rule is presented in Fig.8. The $T(E)$ is an energy dependent threshold chosen for the γ efficiency to be about 0.8. The π^0 efficiency means a fraction of π^0 events classified as γ events. A poor recognition of π^0's by the CDF method at 10 GeV is associated with the limited window of strips and wires over which the shower fit was performed. Diminution of the correctly classified π^0's ranging from 20 to 40 GeV is due to the decayed photons coming together.

The ability of the neural networks to separate γ and π^0 events is illustrated in Fig.9.

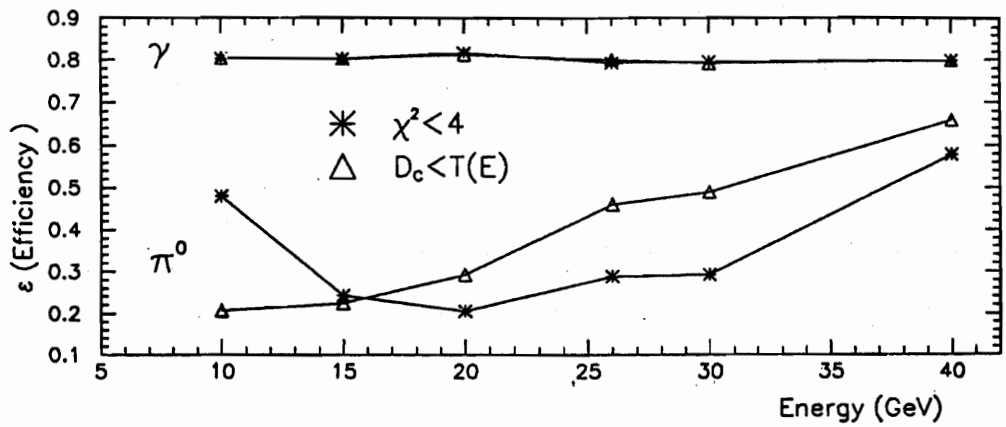

Fig. 8. Efficiency for passing a decision rule.

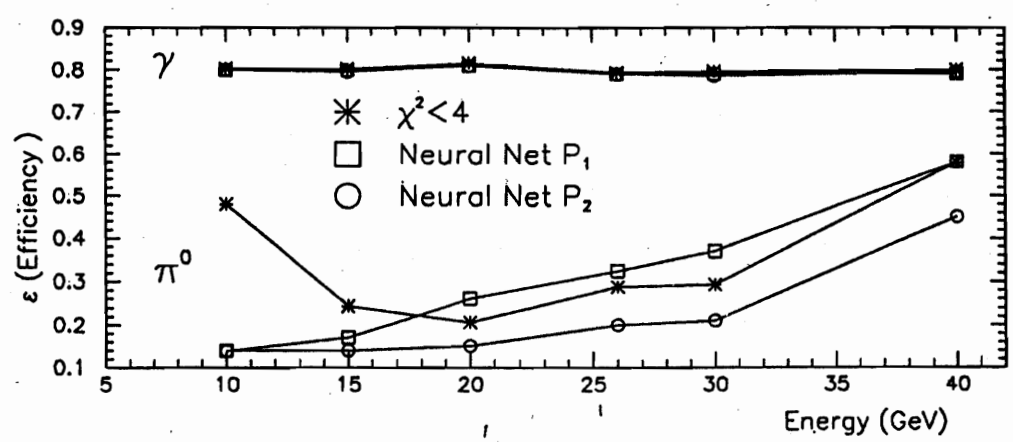

Fig. 9. Efficiency for passing a recognition procedure.

One can see that neural network P_2 recognizes π^0's better than other procedures. A relative variation of the fraction falsely recognized π^0's while passing from the pure CDF method to the neural network classifier P_2 are represented in the following table:

E(GeV)	10	15	20	26	30	40
$(\epsilon_{\pi^0}^{CDF} - \epsilon_{\pi^0}^{P_2})/\epsilon_{\pi^0}^{CDF}$	0.70	0.42	0.27	0.30	0.28	0.22

Conclusion

From the above, the implementation of neural networks can be expected to appreciably improve the γ/π^0 separation in the shower maximum detector. In the energy range from 10 to 40 GeV the proposed separation procedure based on multilayer perceptron algorithm, that includes the CDF separation method, reduces the fraction of falsely classified π^0's by $\sim$ 30% on the average as against the pure CDF method. This enhancement of the recognition capacity is due to more complete utilization of information about the electromagnetic shower images,which are produced by the shower maximum detector, when classified by the neutral network P_2.

The author is grateful to A.A.Derevschikov and A.N.Vasiliev for support of this work.

References

[1] R.M.Harris (For the CDF and D0 collaboration). Fermilab-Conf-94/101-E.

[2] J.W.Harris et al. (STAR Collaboration).//Nucl. Phys. A566 (1994) 277.

[3] Conceptual Design Report for the Solenoidal Tracker At RHIC. The *STAR* Collaboration, LBL PUB-5347(1992).

[4] R.Brun et al. CERN preprint, CERN-DD/EE/84-1, (1984).

[5] L.Balka et al.//Nucl. Instr. and Meth. A267 (1988) 272.

[6] S.A.Akimenko et al. IHEP STAR/EMC internal report.

[7] F.Abe et al. (CDF Collaboration).//Phys. Rev. D48 (1993) 675.

[8] L.Lonblad, C.Peterson and Rognvaldsson.//Nucl. Phys. B349 (1991), 675.

[9] J.Proriol Nucl.//Instr. and Meth. A337 (1994) 566.

[10] L.Lonblad, C.Peterson and Rognvaldsson. Computer Physics Communications.70 (1992).

Received December 21, 1994

Н.Г.Минаев
Разделение γ/π^0 в детекторе максимума ливня с применением алгоритма нейронной сети.

Оригинал-макет подготовлен с помощью системы LaTeX.
Редактор Е.Н.Горина. Технический редактор Н.В.Орлова.

Подписано к печати 23. 12. 94. Формат $60 \times 84/8$.
Офсетная печать. Печ.л. 1.00. Уч.-изд.л. 0,76 Тираж 240. Заказ 181.
Индекс 3649. ЛР №020498 06.04.1992.

Институт физики высоких энергий, 142284, Протвино Московской обл.

Индекс 3649

П Р Е П Р И Н Т 94-142, И Ф В Э, 1994