46 руб.

Индекс 3649

ПРЕПРИНТ 93-61, ИФВЭ, 1993

IFVE-93-61

Fermilab Library
0 1160 0032684 7

10

INSTITUTE FOR HIGH ENERGY PHYSICS

FERMILAB
JUN 15 1994
LIBRARY

IFVE
IHEP 93-61
OCIIM

N.I.Andreev, S.S.Kozub,
V.V.Sytnik, A.T.Veshchikov, A.V.Zlobin

MECHANICAL PROPERTIES OF THE COIL FOR THE UNK SUPERCONDUCTING MAGNETS

NAME	I D No	M.S

RETURN TO FERMILAB LIBRARY

Protvino 1993

UDK 537.312.62:621.384.6 M–24

Abstract

Andreev N.I. et al. Mechanical Properties of the Coil for the UNK Superconducting Magnets: IHEP Preprint 93-61. – Protvino, 1993. – p. 10, figs. 6, tables 1, refs.: 5.

This paper presents the results on the experimental study of the elasticity modulus of the coils of superconducting magnets for the UNK, having two types of the cable insulation at the ambient, nitrogen and helium temperatures. The effect of the technological factors on the value of the elasticity modulus is also considered.

Аннотация

Андреев Н.И. и др. Механические свойства обмоток сверхпроводящих магнитов: Препринт ИФВЭ 93-61. – Протвино, 1993. – 10 с., 6 рис., 1 табл., библиогр.: 5.

В работе представлены результаты экспериментальных исследований модуля упругости обмоток сверхпроводящих магнитов УНК с двумя типами изоляционного покрытия СП-кабеля при комнатной, азотной и гелиевой температурах. Рассмотрено влияние технологических факторов на величину модуля упругости обмоток.

© Institute for High Energy Physics, 1993.

Н.И.Андреев и др.
Механические свойства обмоток сверхпроводящих магнитов.

Оригинал-макет подготовлен с помощью системы LaTeX.
Редактор А.А.Антипова. Корректор Е.Н.Горина.

Подписано к печати 26. 04. 93 г. Формат 60 × 90/16.
Офсетная печать. Печ.л. 0,67. Уч.-изд.л. 0,70. Тираж 120. Заказ 932.
Индекс 3649. Цена 46 руб.

Институт физики высоких энергий, 142284, Протвино Московской обл.

INTRODUCTION

During the production of superconducting (SC) magnets great attention is paid to the mechanical stresses in the magnet coil during its assembling. Such an analysis requires the knowledge of the value of the deformation of an SC coil and of structural materials during cooldown from room to operating temperature. In addition to that, one should also know the strain of a SC coil versus the value of the stress and the time of the stress applied in the same temperature interval. These problems have been treated in a number of articles (see, for example, refs. [1,2,3]).

The coils of the SC magnets for the UNK [4] are manufactured from a flat transposed Rutherford-type SC cable consisting of 19 strands, each 0.85 mm in diameter. The cross section of the SC cable has a trapezoid shape with the bases equal to 1.30 mm and 1.62 mm and a height of 8.5 mm for the coil inner layer and for the layer outer one they are 1.33 mm and 1.59 mm and a height of 8.5 mm. During the production of SC magnet models two types of insulation were used, one consisting of a polyimide film and epoxy-impregnated fiberglass tape, the other one consisting of polyimide only.

This note presents the results on measuring the coil strain versus the stress applied at 300, 77 and 4 K and also the consideration of the effect of the coil curing and of the structural materials applied in manufacturing the SC cable. Similar measurements were carried out with samples of bare cable, epoxyimpregnated fiberglass tape and polyimide film with a gluey coating. Proceeding from the obtained data we have considered the results on measuring the elasticity modulus of the SC magnet coils for the UNK.

1. MEASUREMENT TECHNIQUE

The stress-strain dependence $\varepsilon(\sigma)$ was measured with the help of a package sample in a device, whose measuring part is shown in fig.1a. The sample under study was placed between two plates. The stress was exerted by the press and imparted to the sample across the sphere and upper plate. The stress value was found from the press pressure measured with the help of a manometer. The strain was determined from the readings of two multiturn indicators, each having a scale factor of 1 μm. To make measurements at 77 K the sample and plates were placed into a dewar with liquid nitrogen.

Measurements at liquid helium temperature were made in a cryostat with the help of a device shown in fig.1b. The sample was put between two plates, one of them was fixed to a 58 mm OD stainless steel pipe. The lower plate could move and was fixed with the help of a link to a flange fixed on the bellows. With compressed gas inlet into the bellows, they moved the flange up and compressed the sample. The compressive force was found from the pressure value in the bellows measured with the manometer. The maximum stress on the sample was confined by the rigidity of the bellows and was 30000 N. The strain of the sample was determined as a difference between the flange motion and the deformation of the device itself. The plate motion was monitored with three multiturn indicators.

Figure 1c shows the schematic diagram of the device used to measure the $\varepsilon(\sigma)$-dependence on the segmented samples. The half-coil under study was placed into this device, having two hydraulic cylinders exerting a coil pressure of up to 80 MPa. The pressure inside the hydraulic cylinders was measured by the manometer and the coil strain was monitored with multiturn indicators. The proper deformation of all the devices mentioned above was found with the help of stainless steel blocks placed instead of the coil samples.

The strain of the bare cable, coil and insulating materials was measured on rectangular package samples.

The cable was transposed from 19 SC strands, each 0.85 mm in diameter. It had a rectangular cross section of 8.7×1.45 mm^2, and its thickness was equal to the mean thickness of the cable for the UNK dipole. The package sample was composed of 15 pieces of the bare cable 120-mm long and was fixed at the edges with plates and screws to make it mechanically stable. The measurement section of the sample was 80 mm long.

CONCLUSIONS

The deformation properties of the SC cable of the insulating materials and of the coils of the SC magnets for the UNK have been measured at temperatures 300, 77 and 4 K. The effect of a number of technological and working parameters on them has also been studied. The stress-strain dependence has a nonlinear nature and a hysteresis whose value depends on the material rigidity. After the first loading an increase of the rigidity is observed.

The elasticity modulus of the coils at the room temperature is determined by the elasticity modulus of the cable and of insulating materials and their relative thickness. Application of PF insulation on the cable of the same thickness results in higher values of the elasticity modulus of the coil as compared with *PP* insulation.

At cryogenic temperatures the coil rigidity increases and the effect of the curing pressure on it decreases, the hysteresis of the stress-strain curve decreases too. The elasticity modulus of the coils with *PF* and *PP* insulation become actually equal.

References

[1] Rogers D., Markley F. Stress Relaxation in SSC 50mm Dipole Coils. Super Collider 4, Vol. 4, Plenum Press, New York, 1992, pp. 351-357.

[2] Markley F., Kerby J. Investigation of the Mechanical Properties of Superconducting Coils. Super Collider 2, Vol. 2, Plenum Press, New York, 1990, pp. 753-763.

[3] Gladky V.N., Kozub S.S., Veshchikov A.T. Temperature Deformation of the Structural Materials of the Superconducting Magnets for the UNK. Proc. of the 14-th Intcr. Cryogenic Materials Conference, Kiev, 1992.

[4] Ageev A.I. et al. Study of the Models SC Dipole Magnet for the UNK. Proc. of the 11-th Int. Conf. on Mag. Tech. (MT-11), Vol. 1, Tsukuba, Japan, 1989, p. 111.

[5] Davidson M., Bastian S., Markley F. Measurement of the Elasticity Modulus of Kapton Perpendicular to the Plane of the Film at Room and Cryogenic Temperatures. Super Collider 4, Vol.4, Plenum Press, New York, 1992, pp. 1039-1045.

Received April 23, 1993

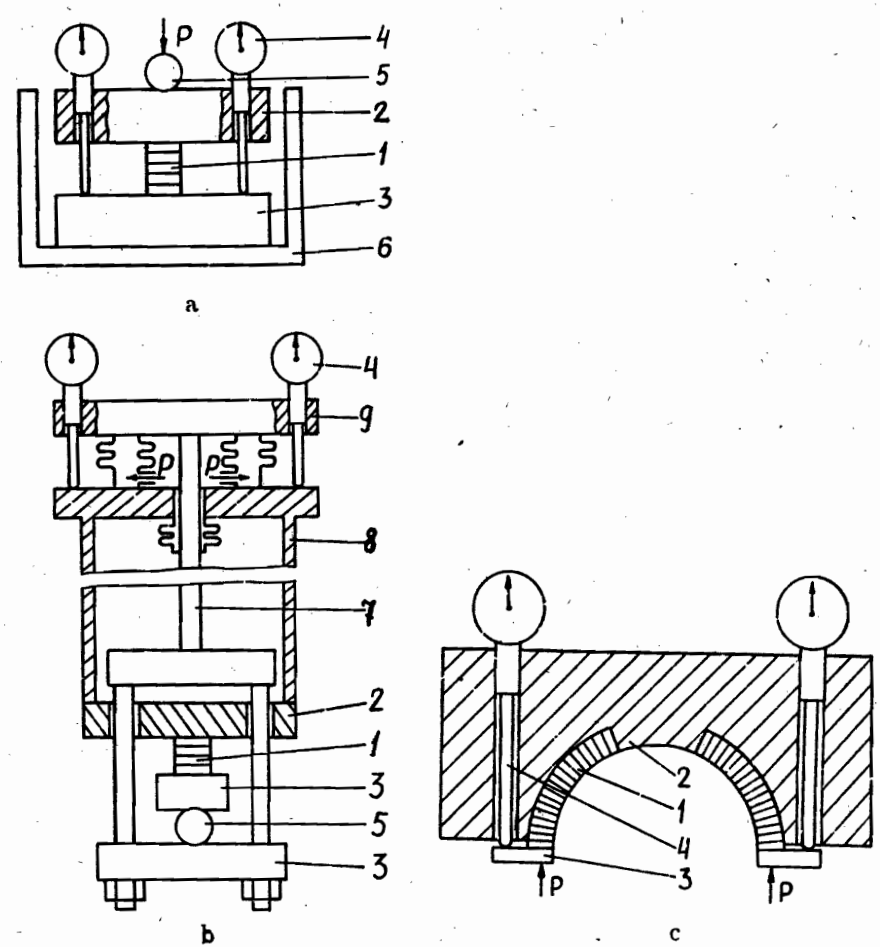

Figure 1. The layout of the devices for measuring the stress-strain dependence of the materials and coils of SC magnet: measuring of rectangular samples at 300, 77 K (a) and 4 K (b), measuring of the SC coils (c). 1 – sample, 2 – upper plate, 3 – lower plate, 4 – multiturn indicator, 5 – sphere, 6 – dewar vessel, 7 – link, 8 – pipe, 9 – flange.

To prepare the coil samples, a polyimide film 10 mm wide and 20 μm thick was wound up on the cable with a twist pitch of 5 mm. After that either a layer of 100 μm thick epoxy-impregnated fiberglass tape (PF insulation) or that of a 40 μm thick polyimide film with a gluey coating (PP insulation), 5 μm thick on either side, was put on the cable with a 1 mm gap. The package was assembled out of 12 pieces of the cable and then was compressed in the mandrel until a pressure of 50 or 100 MPa was attained, and then cured at 150° C for 5 hours for the PF insulation or at 140° C for 2 hours for the PP insulation. The samples obtained that way were 50 mm long, 9 mm thick and 20 mm high.

Package samples were stacked from an epoxy-impregnated fiberglass tape or polyimide film with a gluey coating. They were compressed to a stress of 50 or 100 MPa and then cured. The samples of insulating materials were 20 mm long, 10 mm wide and 6-12 mm high.

2. EXPERIMENTAL RESULTS

Figure 2 shows the stress-strain curves at the room temperature for the coil samples made with PF and PP insulations of the cable for a curing pressure of 100 MPa. As is seen, the dependence is nonlinear. To characterize the rigidity of the materials the elasticity modulus determined by the relationship $E = \Delta\sigma/\Delta\varepsilon$ was used. With a load increased, the elasticity modulus of the coil first increases and then it becomes actually constant within the stress range 50-100 MPa and with further increase of the stress the value of E starts dropping. The unloading curve passes below the loading one, i.e. a certain hysteresis is observed.

The measurements have shown that after the first loading the coil elasticity modulus somewhat increased and left actually unchanged in the subsequent cycles. Therefore, in what follows we present the coil elasticity modulus measured in the second cycle. Within the stress range 50-100 MPa in the second cycle the elasticity modulus of the coil with PF insulations was 16 GPa and that of the one with PP insulation was 13 GPa. This is about 30% as large as in the first cycle. During the sample unloading the value of E in the first and subsequent cycles remained basically unchanged. For the curing pressure 50 MPa the elasticity modulus of the coil with PP insulation decreases by 40% and is equal to 9 GPa, whereas for the one with PP insulation this reduction does not exceed 10% and is equal to 14 GPa.

Figure 3 shows the results on measuring the $\varepsilon(\sigma)$-dependence for the bare cable and insulating materials at the room temperature. These results suggest that in the stress range 50-100 MPa the value of E for the cable is 28 GPa, that

Digit 1 denotes the results for the coil with PP insulation, digits 2 and 3 denote these for the coil with PF insulation. Curve 2 corresponds to the case when the total thickness of the insulation determined by that of the polyimide and fibeglass varies due to the variation of only the fiberglass thickness when the polyimide insulation was 40 μm thick. Curve 3 corresponds to the proportional variation of the thickness of the polyimide and fiberglass when the ratio of their thicknesses was 2:5.

The above curves suggest that for the same thickness of the cable the elasticity modulus of the coil with PP insulation is smaller than that of the coil with PF insulation. This is related to a lower elasticity modulus of the polyimide film as compared with epoxy-impregnated fiberglass tape.

The results presented in Fig.6 by curves 1 and 2 allow one to explain different effects of curing pressure on the value of the elasticity modulus of the coils with PP and PF insulation of the cable. As the cable insulation thickness gets thinner with an increase of the curing pressure it is easy to see that the same variation of the cable insulation thickness leads to a different relative variation of the coil elasticity modulus if the cable PF insulation thickness varies due to the fiberglass tape strain.

The mean thickness of the insulated cable in the UNK dipole coils is equal to 1.63 mm. The curves presented in Fig.6 suggest that for this cable thickness the elasticity modulus of the coils with PP insulation should equal 9-10 GPa. This is in a good agreement with the results presented in Fig.5. The 9-13 GPa variation of the elasticity modulus in the coils with PP insulation is explained by the variation of the gluey coating thickness on the polyimide film surface and also with the variation of the polyimide insulation thickness and of the bare cable.

The elasticity modulus of the coils with PF insulation of the cable of an average thickness of 1.63 mm may vary, according to the curves in Fig.6, within the 13-15 GPa range. The lower bound corresponds to shaping the coil at the expense of decreasing the fiberglass tape thickness. This corresponds to the conditions of shaping the coil outer and inner layers during the first curing. The upper bound corresponds to the case of additional shaping and curing of the coil to smaller dimensions when the cable insulation thickness varies proportionally at the cost of the polyimide film and fiberglass tape. As is seen, the results presented in Fig.5 are in a good agreement with the aforementioned reasonings.

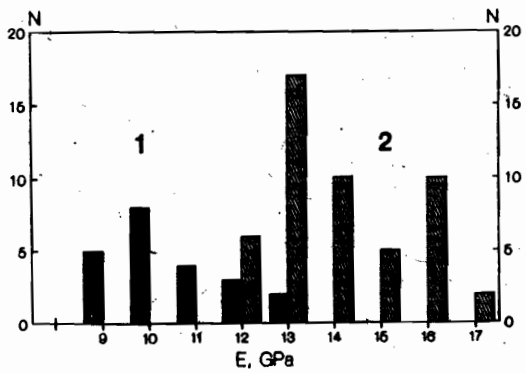

Figure 5. The distribution of the elasticity modulus values for the coils with *PF* and *PP* cable insulations.

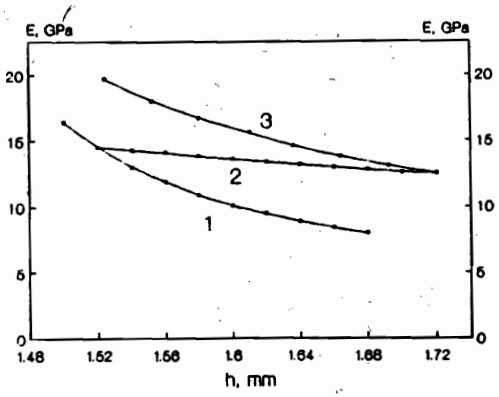

Figure 6. The elasticity modulus of the coils with PP (1) and PF (2, 3) insulation at the room temperature versus the thickness of the insulated cable.

is four times as low as for copper. This is explained by the fact the effective area accepting the stress between the cable strands is less than the one of the whole sample used during processing the results. During the first compression the value of E for the cable was 40% lower as compared with further cycles, whereas a similar reduction was not observed for the insulating materials. The value of elasticity modulus for the epoxy-impregnated fiberglass tape was 6 GPa in the range 50-100 MPa and that of the polyimide film with the gluey coating was 1.5 GPa.

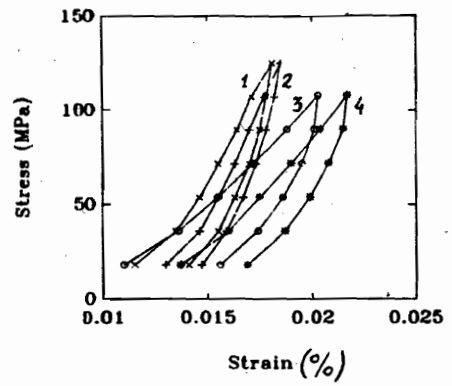

Figure 2. The stress-strain curves for the coil samples with PF insulation (1 – the first loading cycle, 2 – the second cycle) and with PP one (3 is the first cycle, 4 is the second cycle) at the room temperature.

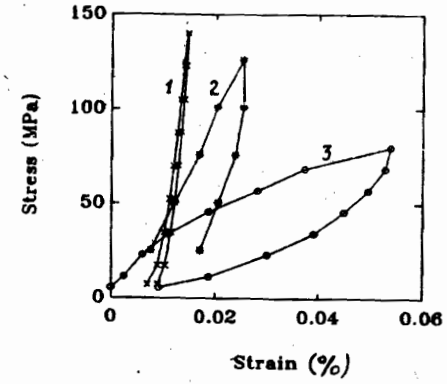

Figure 3. The stress-strain curves of the bare cable (1), the epoxy- impregnated fiberglass tape (2) and the polyimide film with a gluey coating (3) at the room temperature.

As is seen from Figure 3, there was a certain hysteresis during loading and unloading for all the samples. The area of the hysteresis loop increased with a decrease of the rigidity of the material. In addition, no essential effect of the curing pressure on the rigidity of the insulating materials was observed, though such an effect was noticeable for the coil samples with *PP* cable insulation.

Figure 4 shows the results on measuring the strain of the coil, bare cable and insulating materials at cryogenic temperatures. The results indicate that with the temperature decrease from the room one down to 77 K the elasticity modulus of the bare cable increases by 7%, that of the insulating materials by about 3 times and the one of the coil by 1.5-2.5 times. In addition, in this case the effect of the insulation type and of the curing pressure on the elasticity modulus value decreases. With a further temperature decrease down

to 4 K the elasticity modulus of the polyimide film increases twice, whereas for the coil and epoxy-impregnated fiberglass tape it varies but just inessentially. The temperature dependence of the elasticity modulus on temperature for the polyimide film is in agreement with the results presented in paper [5]. Some difference in the absolute value is related to the fact that the authors of ref. [5] made their measurements at lower stresses.

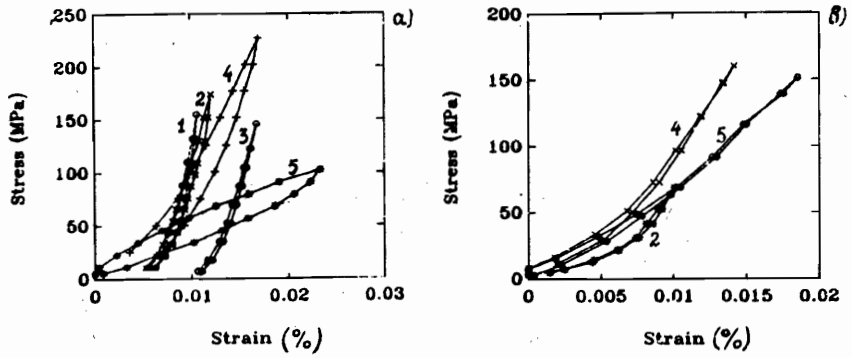

Figure 4. The stress-strain curves of the coil with the PF (1) and PP (2) cable insulation, of the bare cable (3), the epoxy- impregnated fiberglass tape (4), and the polyimide film with a gluey coating (5) at 77 K (a) and 4 K (b) temperature.

The results on studying the elasticity modulus of bare cable, coils and insulating materials with loading the rectangular samples in the stress range 50-100 MPa are summarized in the Table.

Table 1. The elasticity modulus GPa of coils and materials in the stress range 50-100 MPa.

Sample	Temperature, K		
	300	77	4
Bare cable	28	30	-
Polyimide film with gluey coating	1.5	4	10
Epoxy-impregnated fiberglass tape	6	17	17
Coil with PF insulation:			
- curing pressure is 50 MPa	14	25	-
- curing pressure is 100 MPa	16	25	-
Coil with PP insulation:			
- curing pressure is 50 MPa	9	21	-
- curing pressure is 100 MPa	13	23	24

3. MEASUREMENT OF COIL ELASTICITY MODULUS

During production of SC magnet models a large number of coils with PF and PP insulation have been manufactured and measured. PF insulation consisted of two layers: 20 μm thick polyimide film and a 100 μm thick layer of epoxy-impregnated fiberglass tape. There were two versions of PP insulation. In one case it consisted of two layers of polyimide film 20 μm thick, and a layer of polyiamide film 40 μm thick with a gluey coating 5-15 μm thick placed on both film sides. In the another case a polyimide film 30 μm thick was used, whose two layers were used without the gluey coating and the third one had the gluey coating 5-10 μm thick on both sides.

The technology of manufacturing two-layer coils for the UNK magnets envisages first moulding and curing the coil inner layer, followed by common moulding and curing inner and outer layer to the final dimensions. Some coils underwent additional moulding and curing in order to correct the dimensions from the measurement results.

Figure 5 shows the hystograms of the values of the elasticity modulus for the inner layer for 40 full-scale and 10 short dipole coils with PF insulation and, correspondingly, for 10 and 12 coils with PP cable insulation.

The elasticity modulus of the coils with PF insulation varied in the range 12-17 GPa. The hystogram related to the coils with PF insulation has two maxima corresponding to the values of the elasticity modulus 13 GPa and 16 GPa.

The elasticity modulus of the coils with PP insulation varied from 9 to 13 GPa. The hystograms for the coils with PP insulation has one maximum for a value of the elasticity modulus of 10 GPa.

Proceeding from the results on measuring the stress-strain curves of the samples of bare cable and of insulating materials we have calculated the elasticity modulus of the coils in the pressure range 50-100 MPa. The calculations were made according to the formula

$$1/E_o = (l_c/E_c + 2l_p/E_p + 2l_f/E_f)/l,$$

where E_o, E_c, E_p , E_f is the elasticity modulus of the coil, bare cable, polyimide film and fiberglass tape, respectively; l_c, l_p, l_f is the thickness of the bare cable, polyimide film and fiberglass tape; $l = l_c + 2l_p + 2l_f$ is the thickness of the insulated cable in the coil along the middle line of the trapezoid.

Figure 6 presents the curves of the elasticity modulus of the coil at the room temperature versus the thickness of the insulated cable. The thickness of the bare cable across the middle line is 1.45 mm.