I руб. 90 коп.

Индекс 3649

П Р Е П Р И Н Т 92-57, И Ф В Э, 1992

IFVE-92-57

Fermilab Library
0 1160 0023075 9

INSTITUTE FOR HIGH ENERGY PHYSICS

IHEP 92-57
OУНК

15

N.L.Smirnov

ON USING THE STRETCHED WIRES METHOD FOR UNK DIPOLE FIELD DIRECTION MEASUREMENT

Protvino 1992

UDK 539.1.074.3 M–24

Abstract

Smirnov N.L. On Using the Stretched Wires Method for UNK Dipole Field Direction Measurement: IHEP Preprint 92-57. – Protvino, 1992. – p. 16, figs. 6, tables 1, refs.: 5.

The UNK under construction at IHEP, requires more than 4400 dipoles. The dipoles field direction is one of important features of dipoles.

The stretched wires method for UNK dipoles field direction measurement is being grounded. The physical ground of the method and detailed analysis of errors are presented.

Аннотация

Смирнов Н.Л. Использование метода натянутых проводов для измерения положения медианной плоскости диполей УНК: Препринт ИФВЭ 92-57. – Протвино, 1992. – 16 с., 6 рис., 1 табл., библиогр.: 5.

Для создаваемого в ИФВЭ УНК требуется более 4400 отклоняющих диполей. Положение медианной плоскости диполей является одной из важнейших характеристик диполей. Дается обоснование выбора метода натянутых проводов для измерения положения медианной плоскости в диполях УНК. Приводится физическое обоснование метода и подробный анализ погрешностей.

© Institute for High Energy Physics, 1992.

Н.Л.Смирнов

Использование метода натянутых проводов для измерения положения медианной плоскости диполей УНК.

Редактор А.А.Антипова. Технический редактор Л.П.Тимкина. Корректор Е.Н.Горина.

Подписано к печати 2I. 04. 92. Формат 60x90/I6. Офсетная печать. Печ.л. I,00. Уч.-изд.л. I,24. Тираж I20. Заказ 438. Индекс 3649. Цена I руб. 90 коп.

Институт физики высоких энергий, I42284, Протвино Московской обл.

INTRODUCTION

The magnetic structure of the accelerating and storage complex (UNK) under construction at IHEP consists of more than 4400 dipoles [1]. One of the fundamental dipole quantities is the field direction, and the required measurement accuracy is very high ($\sim 2 \cdot 10^{-4}$ rad). To provide this accuracy in serial measurements under the facility conditions requires from the measurement method efficiency and high protection against internal conditions (humidity, temperature deviations, vibrations, etc.). Depending on the peculiarities of the magnets and test facilities there are different methods to measure this quantity. Tevatron SC-dipoles, with no saggitta, have been measured by the stretched wires method, and HERA's SC-dipoles, with 19 mm sagitta, by spotting measurement probe which includes two mutually orthogonal hall generators and tilt sensor [2]. In both examples the serial measurement experience showed that these measurements were most complicated, time-consuming and expensive. For the UNK dipoles, without sagitta, the stretched wires method was proposed for field direction measurement. Essence of method consists in determing the angle between average magnetic field vector and plane formed by two mutually vertical located wires stretched through the dipole bore. For this purpose the flux changes with current are measured. The application of this method for real magnets is possible if some requirements to the magnet and measurement system are provided. The aim of this article is the description of the stretched wires method physical ground, measurement system and determination of magnetic field requirements which makes it possible to use this method and qualitative analysis of measurement results.

1. THE METHOD DESCRIPTION

Figure 1 shows the measurement system scheme including measured dipole D placed on the bench supports, stretched through the dipole bore measurement frame, returning drawing roller R, basic quartz cylinders C creating the coil surface, measurement tilt sensors of the basic cylinders C.T.S. and dipole reference surface measurement tilt sensors D.T.S. The aim of the measurements is to determine the angle between the average longitudinal magnetic field vector and the perpendicular to the horizontal level obtained with the basic cylinders tilt sensor for the present dipole position w.r.t. the horizontal level. All phenomenona caused by 3-dimensionality will be considered below. Here we'll consider only a flat case.

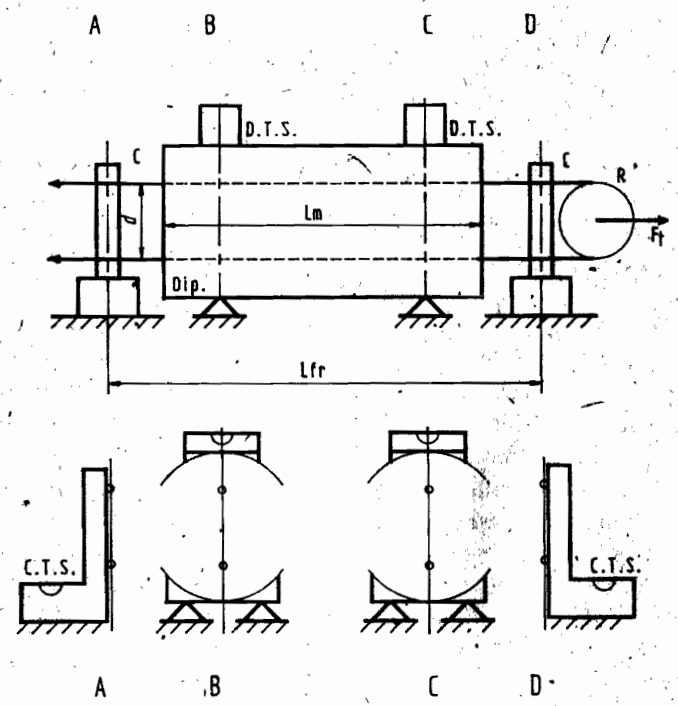

Figure 1. The scheme of the measurement system.

where α is true angle, A_k, ω are oscillation amplitude and frequency, Δt is integration time, B_1 and ΔB are initial field and its change, φ is phase difference for upper and lower wires.

As is seen from expression (33) the error of the measured angle has additive (independent of B_1) and multiplicative components. The most important for measurement is multiplicative component. Its reduction by choosing the integration time multiple to $\frac{4\pi}{\omega}$ is practically very difficult because of temperature daviation of own frequency and the wires become covered with ice.

More efficient methods to counteract to this component are:

– to tune the own resonance frequency far from the harmonic of excitating vibration,

– much measurement statistics.

The experience shows, first, the method allows one to get suppression ~ 10. The typical magnitude of multiplicative component is about $\sum 0.5 \cdot B_1 \cdot 10^{-3}$ rad when resonance frequency is optimally tuned. So the required accuracy achieved for the number of measurement ~ 100. The study of the problems connected with using stretched wires method for the UNK dipoles field direction measurement now is being continued. The results of this study and measurements of the dipoles of the I-st and II-nd stages of the UNK will be published.

I would like to thank Gertsev K.F., Balbekov V.I., Myznikov K.P. for useful discussions and laboratory staff for the measurements performing.

References

[1] Balbekov V.I. et al.// – Dubna, 1983. – V. 1, p. 187.

[2] Meinke R. Methods for production measurement of SC-magnets, DESY, HERA 90-06. April 1990.

[3] Balbekov V.I. et al. IHEP Preprint 82-134. Serpukhov, 1982.

[4] Bronshtein I.N., Semendyaev K.A. – Moskva, "Nayka", 1981. - p. 447.

[5] Tamm I.E. – Moskva, "Nayka", 1966. – p. 232.

Received 16 April,1992

The influence of vibrations

The measurement system from vibrations point of view represents two mechanically disconnected strings $\sim$ 10 m long. The mutual influence of these strings consists only in approximate equality of both wire tension forces due to the returning drawing roller, and in the interaction of the current on the frame, formed by two wires with the field. Because of high quality of the oscillation system, the outside vibration will lead to standing waves in the wires. The stationary waves in the wires are described by the equation:

$$x(t,z) = \sum_{k=1}^{\infty} d_k \cdot sin\frac{\pi \cdot k \cdot z}{l} \cdot sin\frac{\pi \cdot k \cdot a}{l} \cdot t, \qquad (31)$$

where l is the length of the wire, z is the longitudinal coordinate, k is the number of harmonics [4]. So each harmonic creates the stationary wave with its own resonance frequency $\frac{\pi \cdot k \cdot a}{l}$ and amplitude d_k.

The flux through the measurement frame which wires oscillate in plane x normal to the field vector can be presented as:

$$\Phi = B_o[\sum_{k=1}^{\infty} d_{k1} \cdot sin(\omega_1 kt + \varphi_1) \int_o^l sin\frac{\pi \cdot k \cdot z}{l} dz -$$

$$- \sum_{k=1}^{\infty} d_{k2} sin(\omega_2 kt + \varphi_2) \int_o^l sin\frac{\pi \cdot k \cdot z}{l} dz], \qquad (32)$$

where $d_{k1}, \omega_1, \varphi_1$ – are the amplitude, own frequency and phase of the first wire oscillations; index 2 belongs to the second wire. From expression (32) it follows that for even harmonics (k =2n) $\Phi_{2n} \equiv 0$, i.e. only odd harmonics influence the measurements accuracy.

It is known from the measurement that the third harmonic amplitude is approximately 10 times smaller than the first one. So further we will consider only the first harmonic. Note, that the total view of oscillations is very complicated. The wires can oscilate with different amplitudes due to the wire nonhomogeneouty and different tension forces because of the friction in the drawing roller. Moreover, the directions of the wires oscillations differ and they can rotate is time. The velocity of this rotation depends on many accidental factors like: the direction of exciting vibrations, the bore gas flux and so on.

For particular case when vibration amplitudes and frequencies for the upper and lower wires are equal and oscillation planes are normal to the field direction, the measured angle is:

$$\alpha_{mes} = \alpha + \frac{4A_k}{\pi d} cos(\omega\Delta t + \varphi) + \frac{8A_k B_1}{\pi d \Delta B} sin\frac{\omega\Delta t}{2} sin(\frac{\omega\Delta t}{2} + \varphi), \qquad (33)$$

The dipole field may be treated as a superposition from a remnant field, which does not depend on the exciting current, and also on the main field created by current:

$$\vec{B}(I) = \vec{B}_{rm} + \vec{n}(I) C_m \cdot I, \qquad (1)$$

where $\vec{B}_{rm}$ is the remnant field, C_m is the dipole transfer function, I is excitation current, $\vec{n}$ is orth of the alternating part of the field. In general case $\vec{n}$ is depent on the excitation current. For the flat case the field within magnet length L_m equals $\vec{B}(I)$ and equals 0 out of it. The frame length was chosen more than L_m in order to catch the edge dipole field. In this case the flux through the frame width d with its surface turned at angle α w.r.t. to direction $\vec{B}$ is:

$$\Phi(I) = sin\alpha \cdot d \cdot \int_0^{L_m} |\vec{B}(I)| dz = |\vec{B}(I)| \cdot L_m \cdot d \cdot sin\alpha. \qquad (2)$$

For determining value α it's neccesary to measure flux Φ. However the frame is a passive gauge and is sensitive only to the flux change. The flux can be change either by rotating the frame while excitation current is constant, or by alternating the current while the frame is fixed. Since rotating such frame is very difficult it's reasonable to change energization current meanwhile to record E.M.F. induced on frame U_f:

$$U_{fr}(t) = \dot{\Phi} = L_m d C_m \cdot \frac{\partial(I sin\alpha)}{\partial t}. \qquad (3)$$

Here and below we'll suppose that transfer function C_m within field operating region is independent of the current value[1].

After taking an integral of E.M.F. from the frame we'll obtain the flux change

$$U_{out}^{\int}(I) = \frac{1}{\tau} L_m \cdot d \cdot C_m \cdot I \cdot sin\alpha(I), \qquad (4)$$

where τ – is the time constant of integrator.

Hence one may calculate the wanted value $\alpha(I)$ by measuring the integrator output voltage during the excitation current ramp from 0 upto I. However, in practice the using of such method to determine required $\alpha(I)$ in pure case is not possible because of many reasons. Let us consider some of them.

The current ramping time from O to the maximum value may be several tens of seconds and cannot decrease due to power supply output voltage limitation. It is quite difficult to provide the required integrate linearity within such time

[1] Within field operating region C_m deviation usually is less than 1% and its influence on α measurement accuracy is negligable.

interval, actually, in expression (3) there is an additive error caused by the input bias voltage from the amplifier, integrator and input circuits thermal voltage. It is not possible competely to take into account this error because of long integrate time and this error time drift.

Moreover, the impossibility to synchronize the time integrate with the industrial frequency makes significant the induced noise.

One can get rid of these disadvatages with the method based on the flux change measurement when excitation current has a definite small change. Fig.2 shows the structural scheme of the equipment using this method and its operating time diagram.

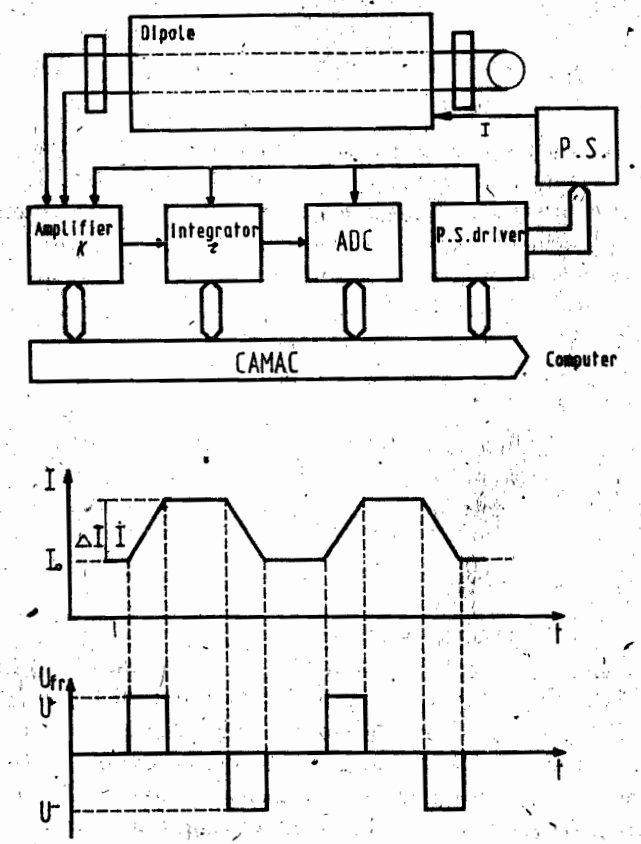

Figure 2. The structural scheme and time diagram.

Table 1.

Parameter		Tolerance	Conditions of tolerances definition
Notations	Explanation		
$\frac{d\alpha(I)}{dI}$	Slope of $\alpha(I)$ function	$< 3 \cdot 10^{-4} rad/kA$	$\Delta I = 0.1kA$ $I_o = I_{inj} = 0.7kA$
α_{rmn}	Angular shift between remnant field vector and main field	$< 0.15 rad$	$B_{rmn} \leq 10^{-3} Tl$; $B_{inj} = 0.7Tl$
B_3 A_3 A_5 B_5	Nonlinearities of magnetic field which take part in measured flux	$< 8 \cdot 10^{-4}$ $< 24 \cdot 10^{-4}$ $< 16 \cdot 10^{-3}$ $< 32 \cdot 10^{-4}$	$\Delta x = \Delta Y = 0$ $B = B_{inj} + B_{max}$
$\Delta x, \Delta y$	Measurement frame center displacement with reference to dipole axis	$< 7mm$	$A_2, B_2 \leq 10^{-3}$
Δd	Frame width error	$< 0.7mm$	$\alpha_o < 10^{-2}$ rad
ΔF_t	Difference of the wires tension forces	$< 10\%$	$\alpha_o < 10^{-2}$ rad
$\Delta l \cdot \beta$	Longitudinal asymmetry of dipole with reference to the frame length $\Delta l, \beta$ – longit. twist of frame	$< 1.2mm \cdot rad$	$L_m \simeq 6m$
$F_i(R_{inp} + R_{fr})$	Interaction between field and frame current	$> 6 \cdot 10^3 N \cdot \Omega$	$B = 0.3Tl/s$ $B = 5Tl$ $\alpha_o < 10^{-2} rad$
$\delta K, \delta\tau$	Errors of measuring electronics K – amplifier coeff. τ – time constant	$< 2\%$	$\alpha_o < 10^{-2} rad$

To estimate this effect one can propose that the whole force is applied to one point in the center of the wire and equals:

$$F = L_m^2 \cdot d \cdot \alpha \cdot B_o \cdot \frac{\partial B}{\partial t} \cdot \frac{1}{R_{inp} + R_{fr}}, \tag{29}$$

thus the frame be rolling at the angle:

$$\Delta\alpha \cong \frac{B_o \cdot L_m^2 \cdot l_f \cdot \dot{B} \cdot \alpha}{2 \cdot F_t \cdot (R_{inp} + R_f)}, \tag{30}$$

where F_t is the wire tension force, l_f is the frame length.

Note that this effect is very weak even for a short circuit frame: $R_{in} = 0; R_f = 200\Omega; F_t = 30N; \dot{B} = 0.3\ Tl/s; \alpha = 10^{-2}\ rad$ and $B_o = 5\ Tl$, the magnitude $\Delta\alpha \sim 3 \cdot 10^{-4}$ rad.

3.3. The electronics errors.

As follows from expression (3), the tolerance to the measurement electronics parameters (the amplifer coefficient – k and time constant – τ) depends on the measured angle magnitude, i.e. on the initial placing of the magnet. Proceeding from the required accuracy of measurement $2 \cdot 10^{-4}$ rad and setting the accuracy $\sim 10^{-2}$ rad., the tolerance to values k and τ is $\sim 2\%$ and easily achieved.

In the table presented the tolerances to parameters which influence on the systematic errors of measurement and the conditions which these tolerances were defined for.

3.4. Accidental errors

The accidental errors peculiar for the described method are the following:

– vibrations of the measurement frame wires due to the vibration of the cryogenics, vacuum and other equipment;

– industrial frequency E.M.F. induced on the measurement frame;

– temperature noise of input circuits of measurement electronics.

The method of eliminating the temperature noise, more precisely, low frequency components has been described earlier.

The effective method of the E.M.F. industrial frequency suppression is to choose the integration time multiple to the main harmonic of industrial frequency ~ 50 Hz. Thus the average integrated signal will be zero for main and higher harmonics.

Technically a more difficult problem is to reduce the accidental error due to wires vibrations. Notice that this error is the biggest and is, in general, decisive derterminating the measurement accuracy.

For quantity estimations below are given the main properties of the equipment and its operating regimes:

– wire CuBe, $\emptyset 100 \mu m$;

– frame width d = 35 mm.

The current impulse parameters

– I_{0min}	=	I_{inj}	=	380 A	for I-st ring,	700 A	for II-nd ring
– I_{0max}	=			3 kA	– " –	5 kA	– " –
– ΔI	=			100 A	– " –	100 A	– " –
– $\dot{I}$	=			1000 A/s	– " –	300 A/s	– " –

The ramping speed limitation is due to P.S. voltage limitation.

As follows from the cited features, the current ramping interval (impulse front) equals fractions of second. The integrator high linearity with such intervals can be easily achieved.

To avoid input bias voltage error the measurements have been carried out during current ramping up and ramping down (forward and backward current impulse fronts).

Since under such excitation of the magnet the operating point will always travel along the same magnetization cycle, constant for this current level, the useful part of the output signal changes only its sign synchronously with the current ramping direction but its value remains constant. I.e. expression (3) will be true (not including additive bias voltage error) for:

$$U_{out}^{\int} = \frac{U_{out}^{\int +} - U_{out}^{\int -}}{2}, \tag{5}$$

where $U_{out}^{\int +}$ and $U_{out}^{\int -}$ are measured output voltages on forward and backward current impulse front, respectively. It should be noticed that the accuracy of taking into account the bias voltage error is quite high because the time delay between forward and backward measurements is less than one second and the drift value of this voltage is negligible.

2. THE PHYSICAL GROUND

The main thing as far as the applicability of the method is whether the real angular shift between the frame plane and field vector can be replaced by the angle obtained from formula (3).

In this method the required integral magnitude $\alpha_M(B) = arcsin\frac{(\vec{B})x}{|\vec{B}|}$ has been replaced by the differential measured magnitude $\alpha_{means}(B) = \frac{\Delta(\vec{B})x}{\Delta|\vec{B}|}$.

Thus the measured angle can be presented via true angle as:

$$\alpha_{meas}(B) = \alpha_M(B) + \frac{\Delta\alpha_M}{\Delta B} \cdot B, \tag{6}$$

where $\Delta\alpha_M$ – changes of the angle with the field ΔB. For a small change $\frac{\Delta\alpha_M}{\Delta B} \simeq \frac{\partial\alpha_M}{\partial B}$. To obtain function $\alpha_M(B)$ from the measurement results we have to solve differential equation (6). The solution of this equation is:

$$\alpha_M(B) = \alpha(0) + \frac{1}{B}\int_0^B \alpha_{meas}(B)dB, \tag{7}$$

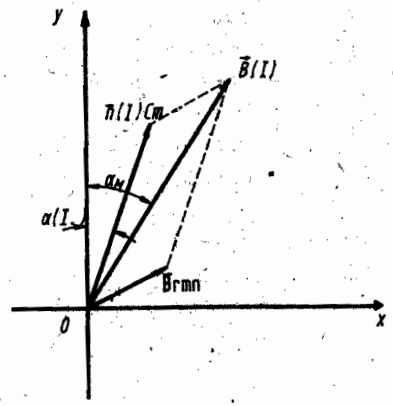

Figure 3.

where $\alpha(0) = \frac{B_{rm}}{B} \cdot \alpha_{rm}$. The remnant angle influence is given on fig.3, where the coordinate system is shown whose center 0 coincides with longitudinal magnet axis and axis OY coincides with the measurement frame plane. The field vector $\vec{B}(I)$ is the sum of two components: the vector $\vec{B}_{rm}$, which dosn't depend on the value of excitation current and vector $\vec{n}(I) \cdot C_m \cdot I$. The error from remnant field (the difference between $\alpha(I_o)$ and α_M fig.3) can be estimated as

$$\Delta\alpha \leq \alpha_{rm}\frac{|B_{rm}|}{|\vec{B}|}. \tag{8}$$

It should be noted that for real magnitude of remnant field $\sim 10^{-3}$ Tl and $B_{inj} = 0.7$ Tl the value α_{rm} tolerance is quite soft and equals $\alpha_{rm} \leq 0.15$ rad. The rotating coil measurement results show that angle shift of remnant field with respect to the main field is less than several degrees.

If this angle is independent within the required tolerance of the excitation current, as follows from the solution, the measured angle equals true angle with an account for the normalized remnant angle. In this case no additional operations with the measured angle $\alpha_{meas}(B)$ are needed. Otherwise, if within operating region B the measured angle $\alpha_{meas}(B)$ change is more than the tolerance, it will cause the necessity: first, to choose the dipole position so as thus

$\Delta d \cdot \alpha \leq 70 \cdot 10^{-4}$ $rad \cdot mm$. Thus, tolerance for Δd depends on the accuracy coincidence of the frame plane and the field vector.

In practice, the placing of dipole on the bench is carried out with angular accuracy $\alpha \leq 10^{-2}$ rad with reference to horizontal plane. Thus the tolerance for the wires sagitta inequality ~ 0.7 mm, which gives the limitation on the tension forces difference of the wires within 10%.

The longitudinal twist of magnet can have quite a big magnitude ($\sim$ 10 mrad). As this method allows one to measure integral field direction at a given magnet position on the bench so it is necessary to control its position on the bench by the tilt sensors of the reference surfaces in order to a reproduce this dipole position in the tunnel.

The measurement frame twist. We'll stand for the angle β between surfaces which form the frame on the ends of the dipole. This twist leads to the measurement error in the case of asymmetric disposition of the dipole with reference to the frame length. The tolerance for the asymmetric value Δl will be defined for the required measurement accuracy $2 \cdot 10^{-4}$ rad from the following relation:

$$\Delta l \leq L_m \frac{2 \cdot 10^{-4}}{\beta}. \tag{25}$$

Fot typical $\beta \simeq 10^{-2}$ rad and $L_m \simeq 6$ m this tolerance is quite soft (120 mm) and easily achieved.

The interaction between field and frame current

The changing flux induces E.M.F. in the measurement frame, equal for a small angle:

$$U_p = -\frac{\partial\Phi}{\partial t} \cong L_m \cdot d \cdot \alpha \cdot \frac{\partial B}{\partial t} \tag{26}$$

This E.M.F. leads to the current in the frame:

$$I = \frac{U_f}{R_{in} + R_f}, \tag{27}$$

where R_{in} is the input impedance of the amplifier, R_f is frame resistance.

The force $d\vec{F}$ applied to the wire element $\vec{dl}$ placed in the field $\vec{B}_o$ by Amper low equals:

$$d\vec{F} = I[\vec{dl} \cdot \vec{B}_o]. \tag{28}$$

The force $d\vec{F}$ direction is normal to vectors $\vec{dl}$ and $\vec{B}_o$, i.e. this force will attempt to roll the frame.

By analogy to what was said above, from condition (19) one can get tolerances for the coefficient magnetudes $B_5 \leq 32 \cdot 10^{-4}$ and $A_5 \leq 16 \cdot 10^{-3}$. These tolerances are also satisfied within operating field region.

I.e. in a pure turn case the tolerances are satisfied for the UNK dipoles and don't require any additional error to be taken into account.

B) The pure displacement case ($\alpha = 0$)

in this case

$$r_b^n - r_a^n = [\Delta x + i(\Delta y + \frac{d}{2})]^n - [\Delta x + i(\Delta y - \frac{d}{2})]^n, \qquad (21)$$

and the flux through the frame ab has the form:

$$\Phi_{ab} = B_o L_m Jm \sum_{n-1}^{\infty} \frac{A_n - iB_n}{r_o^{n-1} \cdot n} \cdot (r_b^n - r_a^n). \qquad (22)$$

The fact that the flux from these nonlinearities has to be less than the main flux $\Phi_{ab}^{(1)}$ at the minimum allowed angle $\alpha = 2 \cdot 10^4$ rad can be used as the criterion for defining the nonlinearities and displacement tolerances.

As follows from above, the tolerance for harmonics and displacement magnitudes can be presented as:

$$A_n \cdot (\frac{\Delta x}{r_o})^{n-1} \leq 2 \cdot 10^{-4}, \quad B_n \cdot (\frac{\Delta y}{r_o})^{n-1} \leq 2 \cdot 10^{-4}. \qquad (23)$$

Due to small relation $\frac{\Delta r}{r_o} \ll 1$, more strict tolerances will take place for n=2.

The values A_2 and B_2 usually are less than 10^{-3} in the operating field region. Thus admissible frame centre displacement is ~ 7 mm. Notice, that it is not problem to provide this tolerance even in the vertical direction.

3.2. The influence of mechanical errors

Here we imply:

- the measurement frame wires gravity sag and the frame width error,
- longitudinal twist of the measurement frame,
- frame turning due to the frame current interaction with dipole field.

The frame width error

The angle α calculated from the measured flux magnitude will contain the error $\Delta\alpha$ due to the frame width error Δd:

$$\frac{\Delta d}{d} = \frac{\Delta \alpha}{\alpha}. \qquad (24)$$

Proceeding from the real magnitude d = 35 mm and required accuracy $\Delta\alpha \leq 2 \cdot 10^{-4}$ rad, one can obtaine the tolerance for the frame width error

to minimize the beam trajectory distortion, and, second, to use the correction system to minimize the beam trajectory distortion. Evidently the precise estimate of the function $\alpha(B)$ can be calculated from estimate $\alpha_{meas}(B)$. This will be the reason to more detailed $\alpha_{meas}(B)$ measurements.

Our right to replace the value of α by the value of $\alpha_{meas}(B)$ is confirmed by the inequality

$$\frac{1}{X}\int_0^X \psi(X)dX \leq \psi_{max}(X). \qquad (9)$$

Second term of expression (4) describes the angle measurement error due to the angle change, and therefore it has been taken into account when calculating the function $\alpha_M(B)$ with formula (5). This error is not taken into account only for initial point B_{inj}.

Note that for UNK SC-dipoles the maximum function $\alpha(I)$ slope is less than $\frac{d\alpha}{dI} < 10^{-4}$ rad/kA and corresponding to its maximum error to injection level equals $0.7 \cdot 10^{-4}$ rad is tolerated.

3. THE ERRORS

For real dipole measurement one should take into account the following factors which occur in systematic error of measurement:

- magnetic field nonlinearity,
- transverse displacement of the measurement frame with respect to the dipole axis,
- difference of wires sagitta,
- cross twist of the measurement frame,
- systematic errors of measurement electronics.

Accidental error of measurement is determined basically by the outside factors such as: vibration, temperature in the operating region, humidity, parameters of blowing gas flux, external electromagnetic field, electronics noise. The analysis of the errors and methods to eliminate these errors will be given below. First of all we'll consider systematic errors.

3.1. The nonlinearities influence on the systematic error of the field direction measurement.

The two-dimensional dipole field is usually represented in the following form:

$$B_y + iB_x = B_o \sum_{n=1}^{\infty} (B_n + iA_n)(\frac{x+iy}{r_o})^{n-1}, \qquad (10)$$

where B_o is field at the dipole axis, B_n and A_n – magnitudes of "normal" and "skew" harmonic order n, r_o is the normalization radius (35 mm), x, y are the point coordinates in the coordinate system, XY have been chosen so that its center combined with dipole center and the Y axis direction coincide with the field vector direction in the dipole center [3]. For a real 3-dimensional case all field components are the functions of longitudinal coordinate Z, which coincides with magnet axis. In the choosen coordinate system the median plane will be called the surface XZ, for which the following conditions are realized:

$$\frac{1}{L_m}\int_{L_m} B_1(z)dz = 1; \quad \int_{L_m} A_1(z)dz = 0, \tag{11}$$

where L_m is the magnet length.

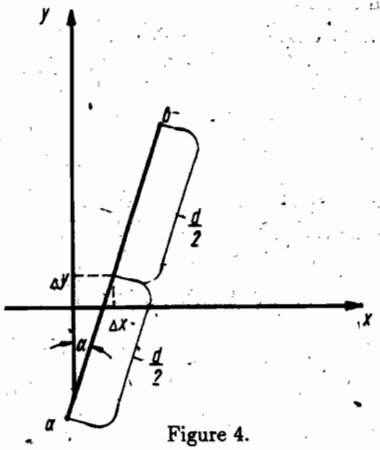

Figure 4.

In order to simplify the analysis of the factors influence on the measurement accuracy we'll first consider the flat case, where all field parameters are constant within magnet length and vanish outside. Fig.4 presents the cross-section of a magnet with the frame from two stretched wires (a, b), turned at angle α with respect to Y axis and displaced by $\Delta X, \Delta Y$ w.r.t. the magnet axis. The flux of magnetic field vector $\vec{B}$ through the frame S will be equal to:

$$\Phi_{ab} = \int\int_s \vec{B}d\vec{s}. \tag{12}$$

According to the above conditions this flux may be written as:

$$\Phi_{ab} = L_m\left[\int_{y_a}^{y_b} B_x dy - \int_{x_a}^{x_b} B_y dx\right], \tag{13}$$

i.e. the flux through the frame can be presented by the field parameters in a view

$$\Phi_{ab} = B_o L_m\left\{Jm\sum_{n=1}^{\infty}\frac{B_n + iA_n}{r_o^{n-1}\cdot n\cdot(tg\alpha + i)}\cdot(r_b^n - r_a^n) - \right.$$
$$\left. - Re\sum_{n=1}^{\infty}\frac{B_n + iA_n}{r_o^{n-1}\cdot n\cdot(1 + ictg\alpha)}(r_b^n - r_a^n)\right\}, \tag{14}$$

where $r_a = x_a + iy_a; r_b = x_b + iy_b$.

A) The pure turn case ($\Delta x = \Delta y = o$)

for this case

$$r_b^n - r_a^n = (\frac{d}{2})^n\cdot(sin\alpha + icos\alpha)^n[1 - (-1)^n], \tag{15}$$

where d is the frame width.

From expression (15) it follows that even harmonics (n=2k) does't give any contribution to the flux (Φ_{ab}) $\equiv$ 0). The odd harmonics (n = 2k + 1) participates in the flux and brings the error in to α measurement.

The main (useful) part of the flux from the first harmonics equal

$$\Phi_{ab}^{(1)} = B_o L_m d(A_1 cos\alpha - B_1 sin\alpha). \tag{16}$$

Taking into acount condition (11) one can obtaine the magnitude of a useful flux

$$\Phi_{ab}^{(1)} = -B_o L_m d sin\alpha. \tag{17}$$

Let us consider the flux magnitudes from the lower odd harmonics and compare them with useful flux magnitude.

– Sextupole component (n=3)

The flux from this nonlinearity for small angle α:

$$\Phi_{ab}^{(3)} \cong B_o\frac{L_m d^3}{12r_o^2}(3B_3\alpha - A_3). \tag{18}$$

Proceeding from the required accuracy of α determination ($2\cdot10^{-4}$ rad), the value of $\Phi_{ab}^{(3)}$ must satisfy the following condition:

$$\frac{\Phi_{ab}^{(3)}}{\Phi_{ab}^{(1)}} \le 2\cdot10^{-4}. \tag{19}$$

From this condition for a real frame width $d \simeq r_o$ one can get tolerances for the harmonic coefficient magnitudes $A_3 \le 24\cdot10^{-4}$ and $B_3 < 8\cdot10^{-4}$. Note, that for the UNK dipoles these coefficient values usually are smaller than the tolerances obtained within operating field region.

– Decapole component (n=5)

The flux from this nonlinearity for the small angle α is

$$\Phi_{ab}^{(5)} \cong B_o L_m\frac{d^5}{80\cdot r_o^4}(A_5 + 5\alpha B_5). \tag{20}$$